MIAMI-DADE

BUILDING CODE COMPLIANCE OFFICE (BCCO)
PRODUCT CONTROL DIVISION

MIAMI-DADE COUNTY, FLORIDA
METRO-DADE FLAGLER BUILDING
140 WEST FLAGLER STREET, SUITE 1603
MIAMI, FLORIDA 33130-1563
(305) 375-2901 FAX (305) 375-2908

# NOTICE OF ACCEPTANCE (NOA)

**YKK AP America, Inc.**
**332 Firetower Road**
**Dublin, GA 31021**

**SCOPE:**
This NOA is being issued under the applicable rules and regulations governing the use of construction materials. The documentation submitted has been reviewed by Miami-Dade County Product Control Division and accepted by the Board of Rules and Appeals (BORA) to be used in Miami Dade County and other areas where allowed by the Authority Having Jurisdiction (AHJ).

This NOA shall not be valid after the expiration date stated below. The Miami-Dade County Product Control Division (In Miami Dade County) and/or the AHJ (in areas other than Miami Dade County) reserve the right to have this product or material tested for quality assurance purposes. If this product or material fails to perform in the accepted manner, the manufacturer will incur the expense of such testing and the AHJ may immediately revoke, modify, or suspend the use of such product or material within their jurisdiction. BORA reserves the right to revoke this acceptance, if it is determined by Miami-Dade County Product Control Division that this product or material fails to meet the requirements of the applicable building code.

This product is approved as described herein, and has been designed to comply with the High Velocity Hurricane Zone of the Florida Building Code.

**DESCRIPTION: Series "35-DH" Medium Stile Aluminum Outswing Storefront Door w/w/out Transom**

**APPROVAL DOCUMENT:** Drawing No. W03-47, titled "35-DH Medium Stile Alum Outswing Entrance Door", sheets 1 through 11 of 11, prepared, signed and sealed by Humayoun Farooq, P.E., dated 06/24/03 with revision date on 10/07/03, bearing the Miami-Dade County Product Control Revision stamp with the Notice of Acceptance number and expiration date by the Miami-Dade County Product Control Division.

**MISSILE IMPACT RATING: None**

**LABELING:** Each unit shall bear a permanent label with the manufacturer's name or logo, city, state and following statement: "Miami-Dade County Product Control Approved", unless otherwise noted herein.

**RENEWAL** of this NOA shall be considered after a renewal application has been filed and there has been no change in the applicable building code negatively affecting the performance of this product.

**TERMINATION** of this NOA will occur after the expiration date or if there has been a revision or change in the materials, use, and/or manufacture of the product or process. Misuse of this NOA as an endorsement of any product, for sales, advertising or any other purposes shall automatically terminate this NOA. Failure to comply with any section of this NOA shall be cause for termination and removal of NOA.

**ADVERTISEMENT:** The NOA number preceded by the words Miami-Dade County, Florida, and followed by the expiration date may be displayed in advertising literature. If any portion of the NOA is displayed, then it shall be done in its entirety.

**INSPECTION:** A copy of this entire NOA shall be provided to the user by the manufacturer or its distributors and shall be available for inspection at the job site at the request of the Building Official.
This NOA **revises NOA #02-0220.04** and, consists of this page 1 as well as approval document mentioned above.
The submitted documentation was reviewed by **Theodore Berman, P.E.**

11/24/2003

PRODUCT CONTROL ACCEPTED

**NOA No 03-0916.03**
**Expiration Date: April 16, 2007**
**Approval Date: December 18, 2003**

**YKK AP America Inc.**

## NOTICE OF ACCEPTANCE: EVIDENCE SUBMITTED

**A. DRAWINGS**

1. Manufacturer's die drawings and sections
2. Drawing No. W03-47, titled "35-DH Medium Stile Alum Outswing Entrance Door", sheets 1 through 11 of 11, prepared, signed and sealed by Humayoun Farooq, P.E., dated 06/24/03 with revision date on 10/07/03.

**B. TESTS**

1. Test reports on: 1) Air Infiltration Test, per TAS 202-94
   2) Uniform Static Air Pressure Test, Loading per TAS 202-94
   3) Forced Entry Test, Per FBC 3603.2 (b) and TAS 202-94

   along with installation diagram of an aluminum entrance door, prepared by Hurricane Test Laboratory, Inc., Test Report No. **HTL-0231-0710-02**, dated 08/09/02, signed and sealed by Vinu Abraham, P.E.
2. Test reports on: 1) Air Infiltration Test, per TAS 202-94
   2) Uniform Static Air Pressure Test, Loading per TAS 202-94
   3) Forced Entry Test, Per FBC 3603.2 (b) and TAS 202-94

   along with installation diagram of an aluminum entrance door, prepared by Hurricane Test Laboratory, Inc., Test Report No. **HTL-0231-0402-03**, dated 08/09/02, signed and sealed by Vinu Abraham, P.E.
3. Test reports on 1) Air Infiltration Test, per FBC, TAS 202-94
   2) Uniform Static Air Pressure Test, Loading per FBC TAS 202-94
   3) Forced Entry Test, per FBC 3603.2 (b) and TAS 202-94

   along with marked-up drawings and installation diagram of specimen #1 (elevation B) YES45 FS storefront with 35D doors, prepared by Hurricane Test Laboratory, Inc., Test Report No. **HTL-0231-0402-03**, dated 4/1/03, signed and sealed by Vinu J. Abraham, P.E.
4. Test reports on: 1) Air Infiltration Test, per TAS 202-94
   2) Uniform Static Air Pressure Test, Loading per TAS 202-94
   3) Forced Entry Test, Per FBC 3603.2 (b) and TAS 202-94

   along with installation diagram of an aluminum entrance door, prepared by Hurricane Test Laboratory, Inc., Test Report No. **HTL-0231-0306-03 (Elevation "C")**, dated 03/10-11/03, signed and sealed by Vinu Abraham, P.E.
5. Test reports on: 1) Air Infiltration Test, per TAS 202-94
   2) Uniform Static Air Pressure Test, Loading per TAS 202-94
   3) Forced Entry Test, Per FBC 3603.2 (b) and TAS 202-94

   along with installation diagram of an aluminum entrance door, prepared by Hurricane Test Laboratory, Inc., Test Report No. **HTL-0231-0306-03 (Elevation "C1")**, dated 03/10-11/03, signed and sealed by Vinu Abraham, P.E.

**Theodore Berman, P.E.**
**Theodore Berman, Product Control Division**
**NOA No 03-0916.03**
**Expiration Date: April 16, 2007**
**Approval Date: December 18, 2003**

## NOTICE OF ACCEPTANCE: EVIDENCE SUBMITTED

**6.** Test reports on: 1) Air Infiltration Test, per TAS 202-94
2) Uniform Static Air Pressure Test, Loading per TAS 202-94
3) Forced Entry Test, Per FBC 3603.2 (b) and TAS 202-94
along with installation diagram of an aluminum entrance door, prepared by Hurricane Test Laboratory, Inc., Test Report No. **HTL-0231-0523-03,** dated 05/14/03, signed and sealed by Vinu Abraham, P.E.

**C. CALCULATIONS**

**1.** Anchor Calculations and Structural Analysis, prepared by Al-Farooq Corporation, dated July 09, 2003, signed and sealed by Humayoun Farooq, P.E.

**2.** Complies with ASTM E1300-98.

**D. QUALITY ASSURANCE**

**1.** Miami Dade Building Code Compliance Office (BCCO).

**E. MATERIAL CERTIFICATIONS**

**1.** None

**F. STATEMENTS**

**1.** Statement letter of conformance, dated July 25, 2003, signed and sealed by Humayoun Farooq, P.E.

**2.** Statement letter of no financial interest, dated July 25, 2003, signed and sealed by Humayoun Farooq, P.E.

**G. OTHER**

**1.** Notice of Acceptance No. **02-0220.03**, issued to YKK AP America Inc. for their Series "35-DH" Medium Stile Aluminum Outswing Storefront Door w/w/out Transom, approved on 03/28/02 and expiring on 04/16/07.

**2.** Letter from the consultant stating that the product is in compliance with the Florida Building Code (FBC).

**Theodore Berman, P.E.**
**Theodore Berman, Product Control Division**
**NOA No 03-0916.03**
**Expiration Date: April 16, 2007**
**Approval Date: December 18, 2003**

| SINGLE OR DOUBLE ENTRANCE DOORS W/O TRANSOM | | | |
|---|---|---|---|
| NOMINAL DIMS. | | DESIGN LOAD CAPACITY – PSF | |
| LEAF WIDTH INCHES | DOOR HEIGHT INCHES | EXT.(+) & INT. (–) | EXT.(+) & INT. (–) |
| 30" | 80" | 117.6 | 100.8 |
| 33" | | 106.9 | 91.6 |
| 36" | | 98.0 | 84.0 |
| 39" | | 90.5 | 77.5 |
| 42" | | 84.0 | 72.0 |
| 30" | 84" | 112.0 | 96.0 |
| 33" | | 101.8 | 87.3 |
| 36" | | 93.3 | 80.0 |
| 39" | | 86.2 | 73.8 |
| 42" | | 80.0 | 68.6 |
| 30" | 90" | 104.5 | 89.6 |
| 33" | | 95.0 | 81.5 |
| 36" | | 87.1 | 74.7 |
| 39" | | 80.4 | 68.9 |
| 42" | | 74.7 | 64.0 |
| 30" | 96" | 98.0 | 84.0 |
| 33" | | 89.1 | 76.4 |
| 36" | | 81.7 | 70.0 |
| 39" | | 75.4 | 64.6 |
| 42" | | 70.0 | 60.0 |
| | | HINGE OPTIONS #1, 2 & 3 | HINGE OPTION #4 |

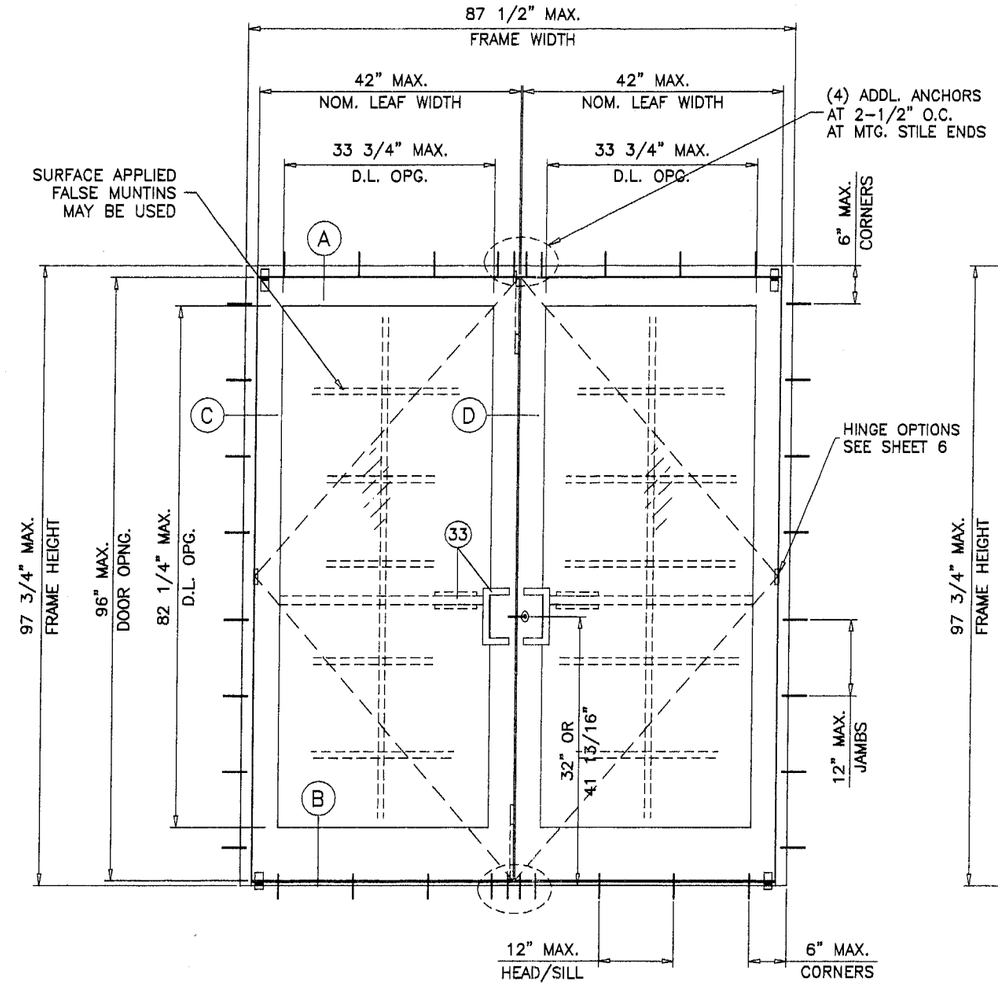


( XX )

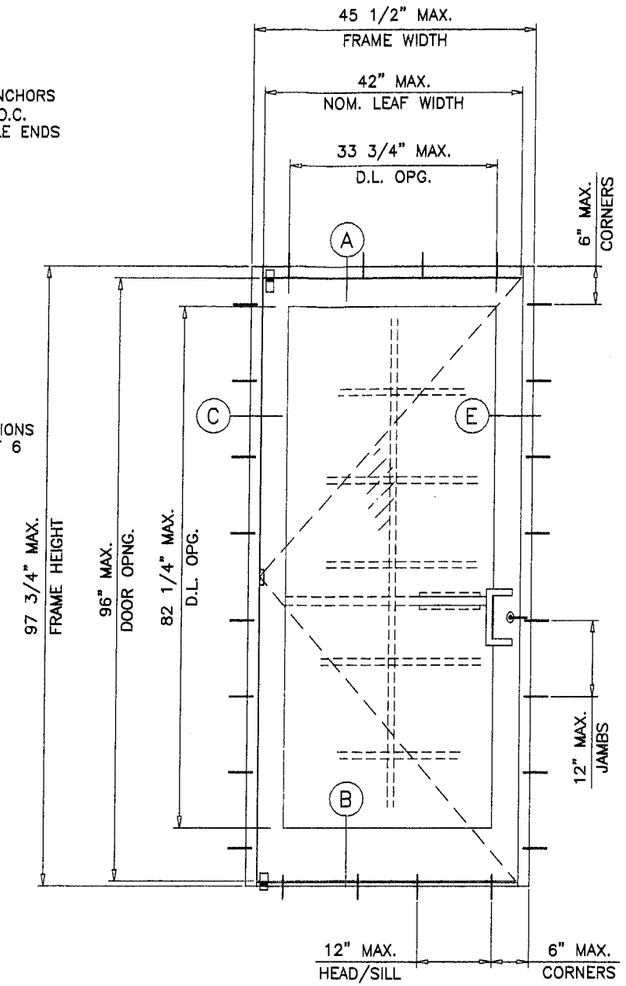


( X )

## 35D MEDIUM STILE ALUMINUM OUTSWING ENTRANCE DOOR

THIS PRODUCT IS NOT RATED FOR IMPACT.
MIAMI–DADE COUNTY APPROVED IMPACT RESISTANT SHUTTERS ARE REQUIRED.

DOORS NOT APPROVED FOR INSTALLATIONS WHERE WATER INFILTRATION RESISTANCE IS REQUIRED.

APPROVAL APPLIES TO SINGLE (X) AND DOUBLE (XX) LEAF DOORS WITH OR WITHOUT TRANSOMS.

MAX. DESIGN LOAD RATING FOR
SINGLE (X) AND DOUBLE (XX) LEAF DOORS W/O TRANSOMS SEE CHART ABOVE.
SINGLE (X) AND DOUBLE (XX) LEAF DOORS WITH TRANSOMS SEE SHEET 2
SINGLE (X) AND DOUBLE (XX) LEAF DOORS WITH YES45–FS STOREFRONT SYSTEM SEE SHEETS 3 THRU 5.

THIS PRODUCT IS DESIGNED TO COMPLY WITH THE HIGH VELOCITY HURRICANE ZONE OF THE 2001 FLORIDA BUILDING CODE.
ALSO FOR WIND LOADS AS PER ASCE 7–88. ASCE 7–93, ASCE 7–95 OR ASCE 7–98 AS REQUIRED BY PREVAILING BUILDING CODE.

WOOD BUCKS BY OTHERS, MUST BE ANCHORED PROPERLY TO TRANSFER LOADS TO THE STRUCTURE.

ANCHORS SHALL BE AS LISTED, SPACED AS SHOWN ON DETAILS. ANCHOR EMBEDMENT TO BASE MATERIAL SHALL BE BEYOND WALL DRESSING OR STUCCO.

ALL STEEL IN CONTACT WITH ALUMINUM TO BE PAINTED OR PLATED.

ANCHORING OR LOADING CONDITIONS NOT SHOWN IN THESE DETAILS ARE NOT PART OF THIS APPROVAL.

**PRODUCT REVISED**
**as complying with the Florida Building Code**
**Acceptance No** 03-0916.03
**Expiration Date** 04/16/07
**By** Glenda Berman
**Miami Dade Product Control Division**

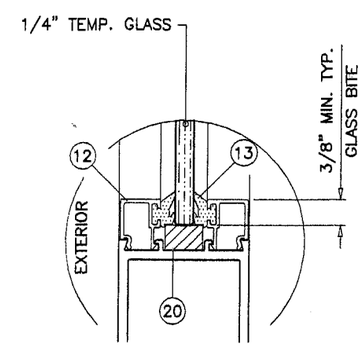


GLAZING DETAIL

Engr: DR. HUMAYOUN FAROOQ
STRUCTURES
FLA. RE # 16557
C.A.N. 3538

OCT 16 2003


AL–FAROOQ CORPORATION
ENGINEERS, PLANNERS & PRODUCT DESIGN
1235 SW 87 AVE
MIAMI, FLORIDA 33174
TEL. (305) 264–8100 FAX. (305) 262–6978
COMP–ANL\W03–37YKK


35D MEDIUM STILE ALUM OUTSWING ENTRANCE DOOR


YKK AP AMERICA INC.
332 FIRETOWER ROAD
DUBLIN, GEORGIA 31021
TEL(478) 277–1955 FAX(478) 277–1978


| revisions: | | | |
|---|---|---|---|
| no | date | by | description |
| A | 10.07.03 | | REV. PER BCCO COMMENTS |

date: 06–24–03
scale: 1/2"=1'–0"
dr. by: HAMID
chk. by:

drawing no. W03–47

| HORIZONTAL LOAD CAPACITY–PSF | | | | | | |
|---|---|---|---|---|---|---|
| WIDTH–W1 INCHES | WIDTH–W2 INCHES | DOOR HEIGHT–A INCHES | WITHOUT REINFORCING EXT.(+)&INT.(–) | WITH REINFORCING EXT.(+)&INT.(–) | WITHOUT REINFORCING EXT.(+)&INT.(–) | WITH REINFORCING EXT.(+)&INT.(–) |
| 72" | 24" | 80" | 64.3 | 109.9 | 64.3 | 84.0 |
| | 30" | | 60.8 | 104.0 | 60.8 | 84.0 |
| | 36" | | 57.6 | 98.6 | 57.6 | 84.0 |
| | 40" | | 55.7 | 95.3 | 55.7 | 84.0 |
| 78" | 24" | | 54.8 | 93.7 | 54.8 | 77.5 |
| | 30" | | 51.8 | 88.6 | 51.8 | 77.5 |
| | 36" | | 49.1 | 84.0 | 49.1 | 77.5 |
| | 40" | | 47.5 | 81.2 | 47.5 | 77.5 |
| 84" | 24" | | 47.2 | 80.8 | 47.2 | 72.0 |
| | 30" | | 44.6 | 76.4 | 44.6 | 72.0 |
| | 36" | | 42.3 | 72.4 | 42.3 | 72.0 |
| | 40" | | 40.9 | 70.0 | 40.9 | 70.0 |
| 72" | 24" | 84" | 61.9 | 105.9 | 61.9 | 80.0 |
| | 30" | | 58.6 | 100.3 | 58.6 | 80.0 |
| | 36" | | 55.7 | 95.3 | 55.7 | 80.0 |
| | 40" | | 53.9 | 92.2 | 53.9 | 80.0 |
| 78" | 24" | | 52.7 | 90.2 | 52.7 | 73.8 |
| | 30" | | 49.9 | 85.5 | 49.9 | 73.8 |
| | 36" | | 47.5 | 81.2 | 47.5 | 73.8 |
| | 40" | | 45.9 | 78.6 | 45.9 | 73.8 |
| 84" | 24" | | 45.5 | 77.8 | 45.5 | 68.6 |
| | 30" | | 43.1 | 73.7 | 43.1 | 68.6 |
| | 36" | | 40.9 | 70.0 | 40.9 | 68.6 |
| | 40" | | 39.6 | 67.7 | 39.6 | 67.7 |
| 72" | 24" | 90" | 58.6 | 100.3 | 58.6 | 74.7 |
| | 30" | | 55.7 | 95.3 | 55.7 | 74.7 |
| | 36" | | 53.0 | 90.8 | 53.0 | 74.7 |
| | 40" | | 51.4 | 88.0 | 51.4 | 74.7 |
| 78" | 24" | | 49.9 | 85.5 | 49.9 | 68.9 |
| | 30" | | 47.5 | 81.2 | 47.5 | 68.9 |
| | 36" | | 45.2 | 77.3 | 45.2 | 68.9 |
| | 40" | | 43.8 | 74.9 | 43.8 | 68.9 |
| 84" | 24" | | 43.1 | 73.7 | 43.1 | 64.0 |
| | 30" | | 40.9 | 70.0 | 40.9 | 64.0 |
| | 36" | | 39.0 | 66.7 | 39.0 | 64.0 |
| | 40" | | 37.8 | 64.6 | 37.8 | 64.0 |
| 72" | 24" | 96" | 55.7 | 95.3 | 55.7 | 70.0 |
| | 30" | | 53.0 | 90.8 | 53.0 | 70.0 |
| | 36" | | 50.6 | 86.6 | 50.6 | 70.0 |
| | 40" | | 49.1 | 84.1 | 49.1 | 70.0 |
| 78" | 24" | | 47.5 | 81.2 | 47.5 | 64.6 |
| | 30" | | 45.2 | 77.3 | 45.2 | 64.6 |
| | 36" | | 43.1 | 73.8 | 43.1 | 64.6 |
| | 40" | | 41.9 | 71.6 | 41.9 | 64.6 |
| 84" | 24" | | 40.9 | 70.0 | 40.9 | 60.0 |
| | 30" | | 39.0 | 66.7 | 39.0 | 60.0 |
| | 36" | | 37.2 | 63.6 | 37.2 | 60.0 |
| | 40" | | 36.1 | 61.8 | 36.1 | 60.0 |
| | | | HINGE OPTIONS #1, 2 & 3 | | HINGE OPTION #4 | |

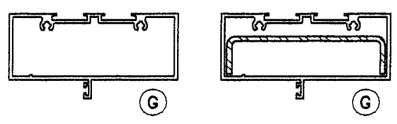


W/O REINFORCING WITH REINFORCING

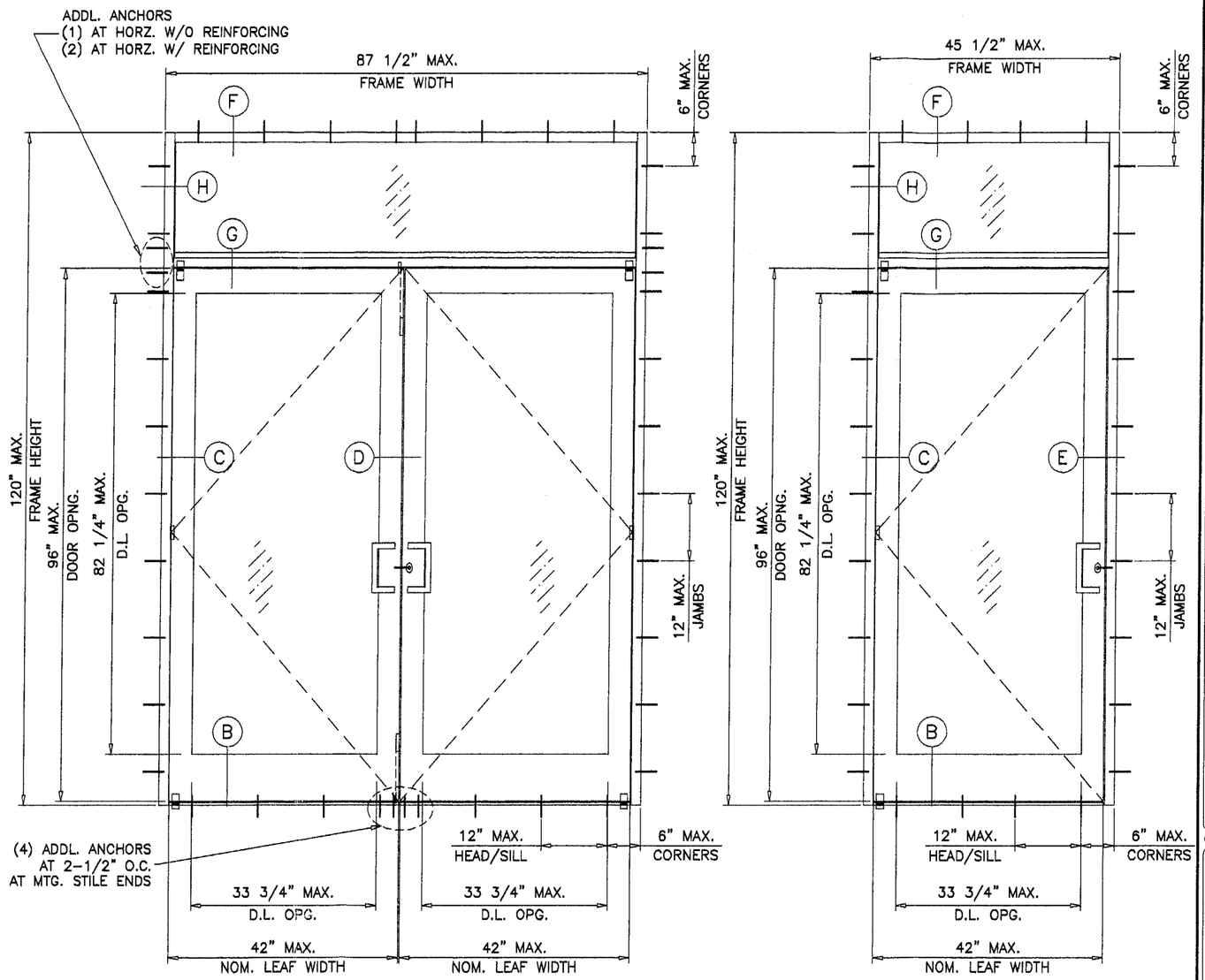


( O/XX ) ( O/X )

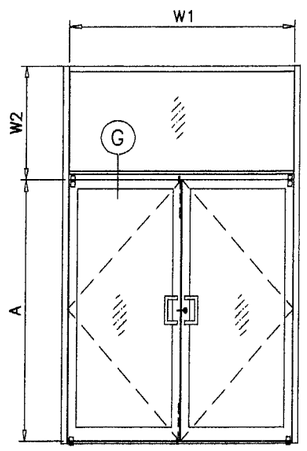


TRANSOM GLASS = GLASS AREA ≤ 11.5 SQ. FT. USE 1/4" ANN. GLASS
GLASS AREA > 11.5 SQ. FT. USE 1/4" TEMP. GLASS

PRODUCT REVISED
as complying with the Florida Building Code
Acceptance No. 03.0916.03
Expiration Date 04/16/07
By: [signature]
Miami Dade Product Control Division

Engr: DR. HUMAYOUN FAROOQ
STRUCTURES
FLA. PE # 16557
C.A.N. 3538

OCT 1 6 2003


AL-FAROOQ CORPORATION
ENGINEERS, PLANNERS & PRODUCT DESIGN
1235 SW 87 AVE
MIAMI, FLORIDA 33174
TEL (305) 264-8100 FAX. (305) 262-6978


COMP-ANL\W03-37YKK

35D MEDIUM STILE ALUM OUTSWING ENTRANCE DOOR


YKK ap™
YKK AP AMERICA INC.
332 FIRETOWER ROAD
DUBLIN, GEORGIA 31021
TEL(478) 277-1955 FAX(478) 277-1978


revisions:

| no | date | by | description |
|---|---|---|---|
| A | 10.07.03 | | REV. PER BCCO COMMENTS |

date: 06-24-03
scale: 1/2"=1'-0"
dr. by: HAMID
chk. by:

drawing no. W03-47

| MULLION LOAD CAPACITY-PSF | | | | |
|---|---|---|---|---|
| WIDTH-W1 INCHES | WIDTH-W2 INCHES | LENGTH-L INCHES | NO REINFORCING EXT.(+) & INT.(-) | LIGHT REINFORCING EXT.(+) & INT.(-) |
| 36" | 30" | 81-3/4" | 70.8 | 100.0 |
| | 36" | | 65.0 | 100.0 |
| | 42" | | 60.1 | 100.0 |
| | 48" | | 55.9 | 100.0 |
| | 54" | | 52.3 | 99.5 |
| | 60" | | 49.0 | 93.3 |
| 42" | 30" | | 65.0 | 100.0 |
| | 36" | | 60.1 | 100.0 |
| | 42" | | 55.9 | 100.0 |
| | 48" | | 52.3 | 99.5 |
| | 54" | | 49.0 | 93.3 |
| | 60" | | 46.2 | 88.0 |
| 36" | 30" | 85-3/4" | 64.3 | 100.0 |
| | 36" | | 59.1 | 100.0 |
| | 42" | | 54.6 | 100.0 |
| | 48" | | 50.8 | 96.7 |
| | 54" | | 47.5 | 90.4 |
| | 60" | | 44.6 | 84.8 |
| 42" | 30" | | 59.1 | 100.0 |
| | 36" | | 54.6 | 100.0 |
| | 42" | | 50.8 | 96.7 |
| | 48" | | 47.5 | 90.4 |
| | 54" | | 44.6 | 84.8 |
| | 60" | | 42.0 | 79.9 |
| 36" | 30" | 91-3/4" | 56.2 | 100.0 |
| | 36" | | 51.6 | 98.1 |
| | 42" | | 47.7 | 90.7 |
| | 48" | | 44.4 | 84.4 |
| | 54" | | 41.5 | 78.9 |
| | 60" | | 38.9 | 74.0 |
| 42" | 30" | | 51.6 | 98.1 |
| | 36" | | 47.7 | 90.7 |
| | 42" | | 44.4 | 84.4 |
| | 48" | | 41.5 | 78.9 |
| | 54" | | 38.9 | 74.0 |
| | 60" | | 36.7 | 69.7 |
| 36" | 30" | 97-3/4" | 49.5 | 88.3 |
| | 36" | | 45.5 | 81.1 |
| | 42" | | 42.0 | 75.0 |
| | 48" | | 39.1 | 69.8 |
| | 54" | | 36.5 | 65.2 |
| | 60" | | 34.3 | 61.2 |
| 42" | 30" | | 45.5 | 81.1 |
| | 36" | | 42.0 | 75.0 |
| | 42" | | 39.1 | 69.8 |
| | 48" | | 36.5 | 65.2 |
| | 54" | | 34.3 | 61.2 |
| | 60" | | 32.3 | 57.7 |

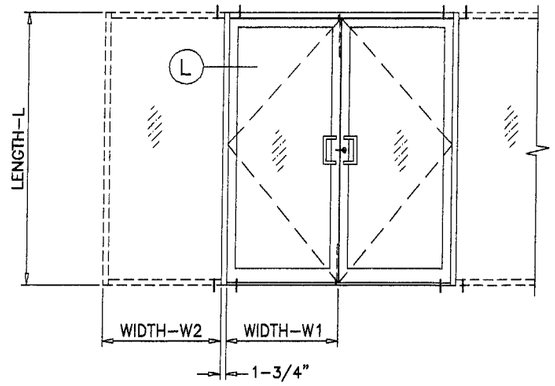


NO REINFORCING

DOUBLE DOOR

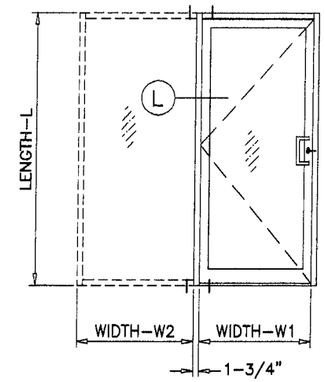


NO REINFORCING

SINGLE DOOR

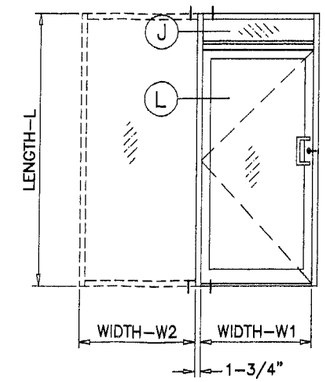


NO REINFORCING

SINGLE DOOR W/ TRANSOM

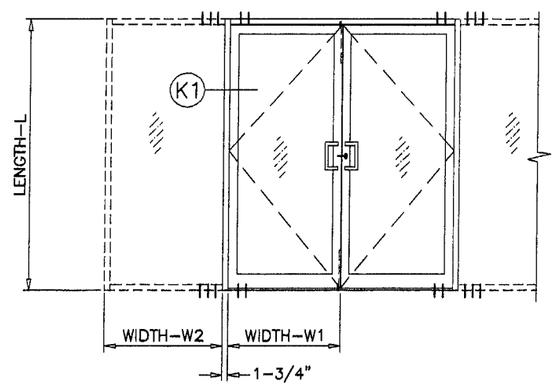


LIGHT REINFORCING

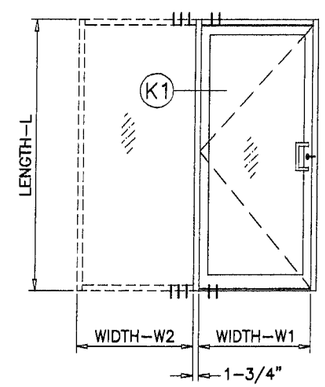


LIGHT REINFORCING

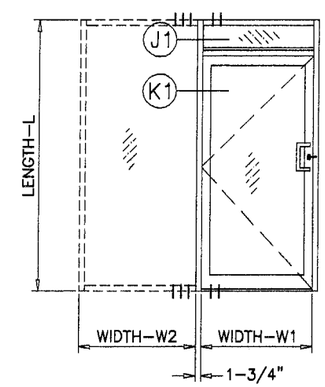


LIGHT REINFORCING

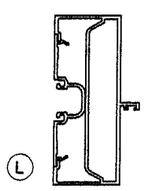


NO REINFORCING

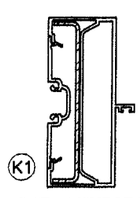


LIGHT REINFORCING

PRODUCT REVISED
as complying with the Florida
Building Code
Acceptance No. 03-0916.03
Expiration Date 04/16/07
By: Gerardo Berman
Miami Dade Product Control
Division

NOTE:

1. FOR DOOR CAPACITY WITH VARIOUS HINGE OPTIONS SEE SCHEDULE SHEET 1.
2. USE SMALLER OF MULLION OR DOOR CAPACITY FOR DESIGN.

Engr: DR. HUMAYOUN FAROOQ
STRUCTURES
FLA. PE # 16557
C.A.N. 3538

OCT 1 6 2003


AL-FAROOQ CORPORATION
ENGINEERS, PLANNERS & PRODUCT DESIGN
1235 SW 87 AVE
MIAMI, FLORIDA 33174
TEL. (305) 264-8100 FAX. (305) 262-6978


COMP-ANL\W03-37YKK

35D MEDIUM STILE ALUM OUTSWING ENTRANCE DOOR


YKK AP AMERICA INC.
332 FIRETOWER ROAD
DUBLIN, GEORGIA 31021
TEL(478) 277-1955 FAX(478) 277-1978


| revisions: | | | |
|---|---|---|---|
| no | date | by | description |
| A | 10.07.03 | | REV. PER BCCO COMMENTS |

date: 06-24-03
scale: 1/2"=1'-0"
dr. by: HAMID
chk. by:

drawing no. W03-47

| MULLION LOAD CAPACITY-PSF (LIGHT REINFORCING) | | | | | |
|---|---|---|---|---|---|
| WIDTH-W1 INCHES | WIDTH-W2 INCHES | LENGTH-L INCHES | 80" MIN. DOOR HT. EXT.(+) & INT.(−) | 84" MIN. DOOR HT. EXT.(+) & INT.(−) | 96" MIN. DOOR HT. EXT.(+) & INT.(−) |
| 60" | 30" | 102" | 68.9 | 71.2 | 79.8 |
| | 36" | | 63.9 | 65.8 | 73.1 |
| | 42" | | 59.6 | 61.3 | 67.5 |
| | 48" | | 55.8 | 57.3 | 62.7 |
| | 54" | | 52.5 | 53.8 | 58.5 |
| | 60" | | 49.5 | 50.7 | 54.8 |
| 64" | 30" | | 66.3 | 68.6 | 77.1 |
| | 36" | | 61.7 | 63.6 | 70.9 |
| | 42" | | 57.6 | 59.3 | 65.6 |
| | 48" | | 54.1 | 55.6 | 61.0 |
| | 54" | | 51.0 | 52.3 | 57.1 |
| | 60" | | 48.2 | 49.3 | 53.6 |
| 72" | 30" | | 61.7 | 63.9 | 72.3 |
| | 36" | | 57.7 | 59.5 | 66.8 |
| | 42" | | 54.1 | 55.8 | 62.1 |
| | 48" | | 51.0 | 52.4 | 58.0 |
| | 54" | | 48.2 | 49.5 | 54.4 |
| | 60" | | 45.7 | 46.8 | 51.2 |
| 84" | 30" | | 55.9 | 57.9 | 66.1 |
| | 36" | | 52.5 | 54.4 | 61.4 |
| | 42" | | 49.6 | 51.2 | 57.4 |
| | 48" | | 46.9 | 48.4 | 53.9 |
| | 54" | | 44.5 | 45.8 | 50.8 |
| | 60" | | 42.4 | 43.6 | 48.0 |
| 60" | 30" | 108" | 56.3 | 57.8 | 63.7 |
| | 36" | | 52.3 | 53.6 | 58.7 |
| | 42" | | 48.8 | 50.0 | 54.3 |
| | 48" | | 45.8 | 46.8 | 50.6 |
| | 54" | | 43.2 | 44.0 | 47.4 |
| | 60" | | 40.8 | 41.6 | 44.5 |
| 64" | 30" | | 54.1 | 55.6 | 61.5 |
| | 36" | | 50.4 | 51.7 | 56.8 |
| | 42" | | 47.2 | 48.3 | 52.7 |
| | 48" | | 44.4 | 45.4 | 49.2 |
| | 54" | | 41.9 | 42.8 | 46.1 |
| | 60" | | 39.6 | 40.4 | 43.4 |
| 72" | 30" | | 50.3 | 51.7 | 57.4 |
| | 36" | | 47.1 | 48.3 | 53.3 |
| | 42" | | 44.3 | 45.4 | 49.7 |
| | 48" | | 41.8 | 42.7 | 46.6 |
| | 54" | | 39.5 | 40.4 | 43.8 |
| | 60" | | 37.5 | 38.3 | 41.4 |
| 84" | 30" | | 45.4 | 46.8 | 52.3 |
| | 36" | | 42.8 | 44.0 | 48.9 |
| | 42" | | 40.5 | 41.5 | 45.8 |
| | 48" | | 38.4 | 39.3 | 43.2 |
| | 54" | | 36.5 | 37.3 | 40.8 |
| | 60" | | 34.8 | 35.6 | 38.6 |

| MULLION LOAD CAPACITY-PSF (LIGHT REINFORCING) | | | | | |
|---|---|---|---|---|---|
| WIDTH-W1 INCHES | WIDTH-W2 INCHES | LENGTH-L INCHES | 80" MIN. DOOR HT. EXT.(+) & INT.(−) | 84" MIN. DOOR HT. EXT.(+) & INT.(−) | 96" MIN. DOOR HT. EXT.(+) & INT.(−) |
| 60" | 30" | 114" | 46.7 | 47.7 | 51.8 |
| | 36" | | 43.5 | 44.4 | 47.9 |
| | 42" | | 40.7 | 41.4 | 44.5 |
| | 48" | | 38.2 | 38.9 | 41.5 |
| | 54" | | 36.0 | 36.6 | 39.0 |
| | 60" | | 34.1 | 34.6 | 36.7 |
| 64" | 30" | | 44.9 | 45.9 | 49.9 |
| | 36" | | 41.9 | 42.8 | 46.3 |
| | 42" | | 39.3 | 40.0 | 43.1 |
| | 48" | | 37.0 | 37.7 | 40.3 |
| | 54" | | 34.9 | 35.5 | 37.9 |
| | 60" | | 33.1 | 33.6 | 35.7 |
| 72" | 30" | | 41.6 | 42.6 | 46.6 |
| | 36" | | 39.1 | 39.9 | 43.4 |
| | 42" | | 36.8 | 37.5 | 40.6 |
| | 48" | | 34.7 | 35.4 | 38.1 |
| | 54" | | 32.9 | 33.5 | 35.9 |
| | 60" | | 31.3 | 31.8 | 34.0 |
| 84" | 30" | | 37.6 | 38.5 | 42.3 |
| | 36" | | 35.5 | 36.3 | 39.6 |
| | 42" | | 33.6 | 34.3 | 37.3 |
| | 48" | | 31.9 | 32.5 | 35.2 |
| | 54" | | 30.3 | 30.9 | 33.3 |
| | 60" | | 28.9 | 29.5 | 31.6 |
| 60" | 30" | 120" | 39.3 | 40.0 | 42.9 |
| | 36" | | 36.6 | 37.2 | 39.7 |
| | 42" | | 34.3 | 34.8 | 37.0 |
| | 48" | | 32.3 | 32.7 | 34.6 |
| | 54" | | 30.4 | 30.8 | 32.5 |
| | 60" | | 28.8 | 29.2 | 30.7 |
| 64" | 30" | | 37.8 | 38.4 | 41.3 |
| | 36" | | 35.3 | 35.9 | 38.3 |
| | 42" | | 33.1 | 33.6 | 35.8 |
| | 48" | | 31.2 | 31.7 | 33.6 |
| | 54" | | 29.5 | 29.9 | 31.6 |
| | 60" | | 28.0 | 28.3 | 29.8 |
| 72" | 30" | | 35.0 | 35.7 | 38.4 |
| | 36" | | 32.9 | 33.5 | 35.9 |
| | 42" | | 31.0 | 31.5 | 33.6 |
| | 48" | | 29.3 | 29.8 | 31.6 |
| | 54" | | 27.8 | 28.2 | 29.9 |
| | 60" | | 26.4 | 26.8 | 28.3 |
| 84" | 30" | | 31.6 | 32.2 | 34.8 |
| | 36" | | 29.8 | 30.4 | 32.7 |
| | 42" | | 28.2 | 28.7 | 30.8 |
| | 48" | | 26.8 | 27.3 | 29.1 |
| | 54" | | 25.6 | 26.0 | 27.7 |
| | 60" | | 24.4 | 24.8 | 26.3 |

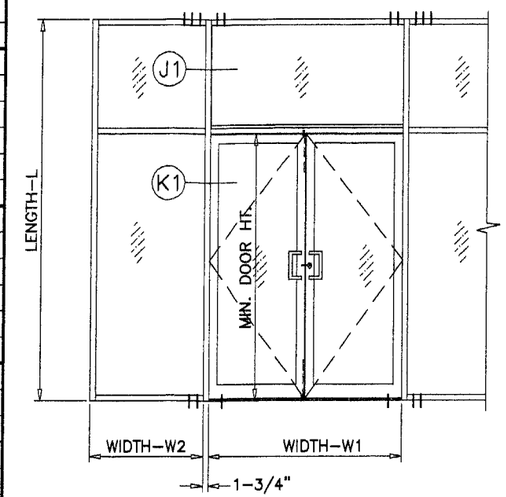


LIGHT REINFORCING

DOUBLE DOOR W/ TRANSOM

**PRODUCT REVISED**
**as complying with the Florida Building Code**
**Acceptance No.** 03-0916.03
**Expiration Date** 04/16/07
**By** [signature]
**Miami Dade Product Control Division**

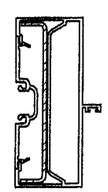


LIGHT REINFORCING

NOTE:

1. FOR DOOR CAPACITY WITH VARIOUS HINGE OPTIONS SEE SCHEDULE SHEET 1.
2. USE SMALLER OF MULLION OR DOOR CAPACITY FOR DESIGN.

Engr: DR. HUMAYOUN FAROOQ
STRUCTURES
FLA. PE # 16557
C.A.N. 3538

OCT 16 2003


AL-FAROOQ CORPORATION
ENGINEERS, PLANNERS & PRODUCT DESIGN
1235 SW 87 AVE
MIAMI, FLORIDA 33174
TEL. (305) 264-8100 FAX. (305) 262-6978


COMP-ANL\W03-37YKK

35D MEDIUM STILE ALUM OUTSWING ENTRANCE DOOR


YKK AP AMERICA INC.
332 FIRETOWER ROAD
DUBLIN, GEORGIA 31021
TEL(478) 277-1955 FAX(478) 277-1978


revisions:

| no | date | by | description |
|---|---|---|---|
| A | 10.07.03 | | REV. PER BCCO COMMENTS |

date: 06-24-03
scale: 1/2"=1'-0"
dr. by: HAMID
chk. by:

drawing no. W03-47

| MULLION LOAD CAPACITY-PSF (HEAVY REINFORCING) | | | | | |
|---|---|---|---|---|---|
| WIDTH-W1 INCHES | WIDTH-W2 INCHES | LENGTH-L INCHES | 80" MIN. DOOR HT. EXT.(+) & INT.(-) | 84" MIN. DOOR HT. EXT.(+) & INT.(-) | 96" MIN. DOOR HT. EXT.(+) & INT.(-) |
| 60" | 30" | 102" | 100.0 | 100.0 | 100.0 |
| | 36" | | 100.0 | 100.0 | 97.1 |
| | 42" | | 95.8 | 94.6 | 91.4 |
| | 48" | | 90.2 | 89.2 | 86.3 |
| | 54" | | 85.3 | 84.4 | 81.7 |
| | 60" | | 80.8 | 80.0 | 77.7 |
| 64" | 30" | | 100.0 | 100.0 | 99.3 |
| | 36" | | 98.2 | 97.0 | 93.3 |
| | 42" | | 92.4 | 91.3 | 88.0 |
| | 48" | | 87.2 | 86.2 | 83.3 |
| | 54" | | 82.6 | 81.7 | 79.1 |
| | 60" | | 78.4 | 77.6 | 75.2 |
| 72" | 30" | | 97.1 | 95.7 | 91.7 |
| | 36" | | 91.4 | 90.1 | 86.6 |
| | 42" | | 86.3 | 85.2 | 82.0 |
| | 48" | | 81.7 | 80.7 | 77.9 |
| | 54" | | 77.7 | 76.8 | 74.2 |
| | 60" | | 74.0 | 73.1 | 70.8 |
| 84" | 30" | | 87.3 | 86.0 | 82.3 |
| | 36" | | 82.7 | 81.5 | 78.1 |
| | 42" | | 78.5 | 77.4 | 74.4 |
| | 48" | | 74.7 | 73.8 | 71.0 |
| | 54" | | 71.3 | 70.4 | 67.9 |
| | 60" | | 68.2 | 67.4 | 65.0 |
| 60" | 30" | 108" | 99.3 | 100.0 | 99.5 |
| | 36" | | 92.3 | 95.1 | 93.2 |
| | 42" | | 86.3 | 88.7 | 87.6 |
| | 48" | | 80.9 | 83.1 | 82.7 |
| | 54" | | 76.2 | 78.1 | 78.3 |
| | 60" | | 72.0 | 73.7 | 74.3 |
| 64" | 30" | | 95.5 | 98.7 | 95.5 |
| | 36" | | 89.0 | 91.8 | 89.6 |
| | 42" | | 83.4 | 85.8 | 84.5 |
| | 48" | | 78.4 | 80.5 | 79.9 |
| | 54" | | 74.0 | 75.8 | 75.7 |
| | 60" | | 70.0 | 71.7 | 72.0 |
| 72" | 30" | | 88.7 | 91.8 | 88.2 |
| | 36" | | 83.1 | 85.8 | 83.2 |
| | 42" | | 78.1 | 80.5 | 78.7 |
| | 48" | | 73.8 | 75.9 | 74.7 |
| | 54" | | 69.8 | 71.7 | 71.1 |
| | 60" | | 66.3 | 68.0 | 67.8 |
| 84" | 30" | | 80.1 | 82.7 | 79.2 |
| | 36" | | 75.5 | 78.1 | 75.2 |
| | 42" | | 71.4 | 73.8 | 71.5 |
| | 48" | | 67.7 | 69.8 | 68.2 |
| | 54" | | 64.4 | 66.3 | 65.1 |
| | 60" | | 61.4 | 63.1 | 62.4 |

| MULLION LOAD CAPACITY-PSF (HEAVY REINFORCING) | | | | | |
|---|---|---|---|---|---|
| WIDTH-W1 INCHES | WIDTH-W2 INCHES | LENGTH-L INCHES | 80" MIN. DOOR HT. EXT.(+) & INT.(-) | 84" MIN. DOOR HT. EXT.(+) & INT.(-) | 96" MIN. DOOR HT. EXT.(+) & INT.(-) |
| 60" | 30" | 114" | 86.2 | 88.8 | 95.8 |
| | 36" | | 80.4 | 82.6 | 89.1 |
| | 42" | | 75.3 | 77.1 | 82.8 |
| | 48" | | 70.7 | 72.4 | 77.3 |
| | 54" | | 66.7 | 68.1 | 72.5 |
| | 60" | | 63.2 | 64.4 | 68.3 |
| 64" | 30" | | 82.8 | 85.4 | 91.9 |
| | 36" | | 77.4 | 79.6 | 86.1 |
| | 42" | | 72.7 | 74.5 | 80.2 |
| | 48" | | 68.5 | 70.1 | 75.1 |
| | 54" | | 64.7 | 66.1 | 70.5 |
| | 60" | | 61.3 | 62.6 | 66.5 |
| 72" | 30" | | 76.8 | 79.3 | 85.0 |
| | 36" | | 72.1 | 74.3 | 80.1 |
| | 42" | | 68.0 | 69.9 | 75.5 |
| | 48" | | 64.3 | 65.9 | 70.9 |
| | 54" | | 61.0 | 62.4 | 66.9 |
| | 60" | | 58.0 | 59.3 | 63.3 |
| 84" | 30" | | 69.2 | 71.6 | 76.4 |
| | 36" | | 65.4 | 67.5 | 72.4 |
| | 42" | | 62.0 | 63.8 | 68.8 |
| | 48" | | 58.9 | 60.5 | 65.5 |
| | 54" | | 56.1 | 57.6 | 62.0 |
| | 60" | | 53.6 | 54.9 | 58.9 |
| 60" | 30" | 120" | 73.1 | 74.4 | 79.8 |
| | 36" | | 68.2 | 69.3 | 73.9 |
| | 42" | | 63.8 | 64.8 | 68.8 |
| | 48" | | 60.0 | 60.9 | 64.4 |
| | 54" | | 56.6 | 57.4 | 60.5 |
| | 60" | | 53.6 | 54.3 | 57.1 |
| 64" | 30" | | 70.3 | 71.5 | 76.8 |
| | 36" | | 65.7 | 66.8 | 71.3 |
| | 42" | | 61.6 | 62.6 | 66.6 |
| | 48" | | 58.1 | 58.9 | 62.5 |
| | 54" | | 54.9 | 55.7 | 58.8 |
| | 60" | | 52.1 | 52.7 | 55.5 |
| 72" | 30" | | 65.1 | 66.4 | 71.5 |
| | 36" | | 61.2 | 62.3 | 66.7 |
| | 42" | | 57.7 | 58.6 | 62.6 |
| | 48" | | 54.5 | 55.4 | 58.9 |
| | 54" | | 51.7 | 52.5 | 55.6 |
| | 60" | | 49.2 | 49.9 | 52.7 |
| 84" | 30" | | 58.8 | 59.9 | 64.8 |
| | 36" | | 55.5 | 56.6 | 60.8 |
| | 42" | | 52.6 | 53.5 | 57.3 |
| | 48" | | 50.0 | 50.8 | 54.3 |
| | 54" | | 47.6 | 48.3 | 51.5 |
| | 60" | | 45.4 | 46.1 | 49.0 |

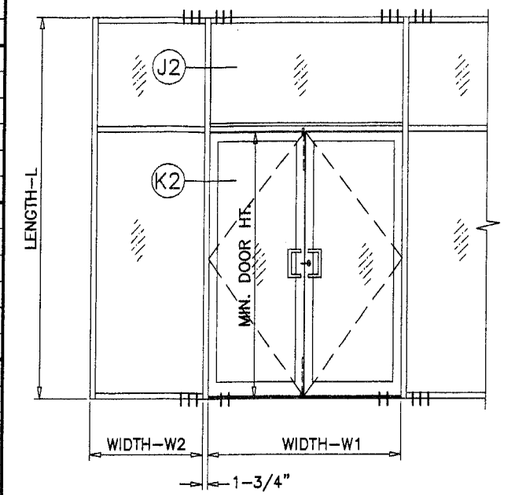


HEAVY REINFORCING

DOUBLE DOOR W/ TRANSOM

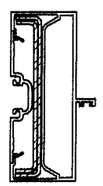


HEAVY REINFORCING

NOTE:

1. FOR DOOR CAPACITY WITH VARIOUS HINGE OPTIONS SEE SCHEDULE SHEET 1.
2. USE SMALLER OF MULLION OR DOOR CAPACITY FOR DESIGN.

PRODUCT REVISED
as complying with the Florida
Building Code
Acceptance No. 03-0916.03
Expiration Date 04/16/07
By Gordon Beaman
Miami Dade Product Control
Division

Engr: DR. HUMAYOUN FAROOQ
STRUCTURES
FLA. PE # 16657
C.A.N. 3538

OCT 16 2003


AL-FAROOQ CORPORATION
ENGINEERS, PLANNERS & PRODUCT DESIGN
1235 SW 87 AVE
MIAMI, FLORIDA 33174
TEL. (305) 264-8100 FAX. (305) 262-6978
COMP-ANL\W03-37YKK


35D MEDIUM STILE ALUM OUTSWING ENTRANCE DOOR

YKK AP AMERICA INC.
332 FIRETOWER ROAD
DUBLIN, GEORGIA 31021
TEL.(478) 277-1955 FAX(478) 277-1978

revisions:

| no | date | by | description |
|---|---|---|---|
| A | 10.07.03 | | REV. PER BCCO COMMENTS |

date: 06-24-03
scale: 1/2"=1'-0"
dr. by: HAMID
chk. by:

drawing no.
W03-47

sheet 5 of 11

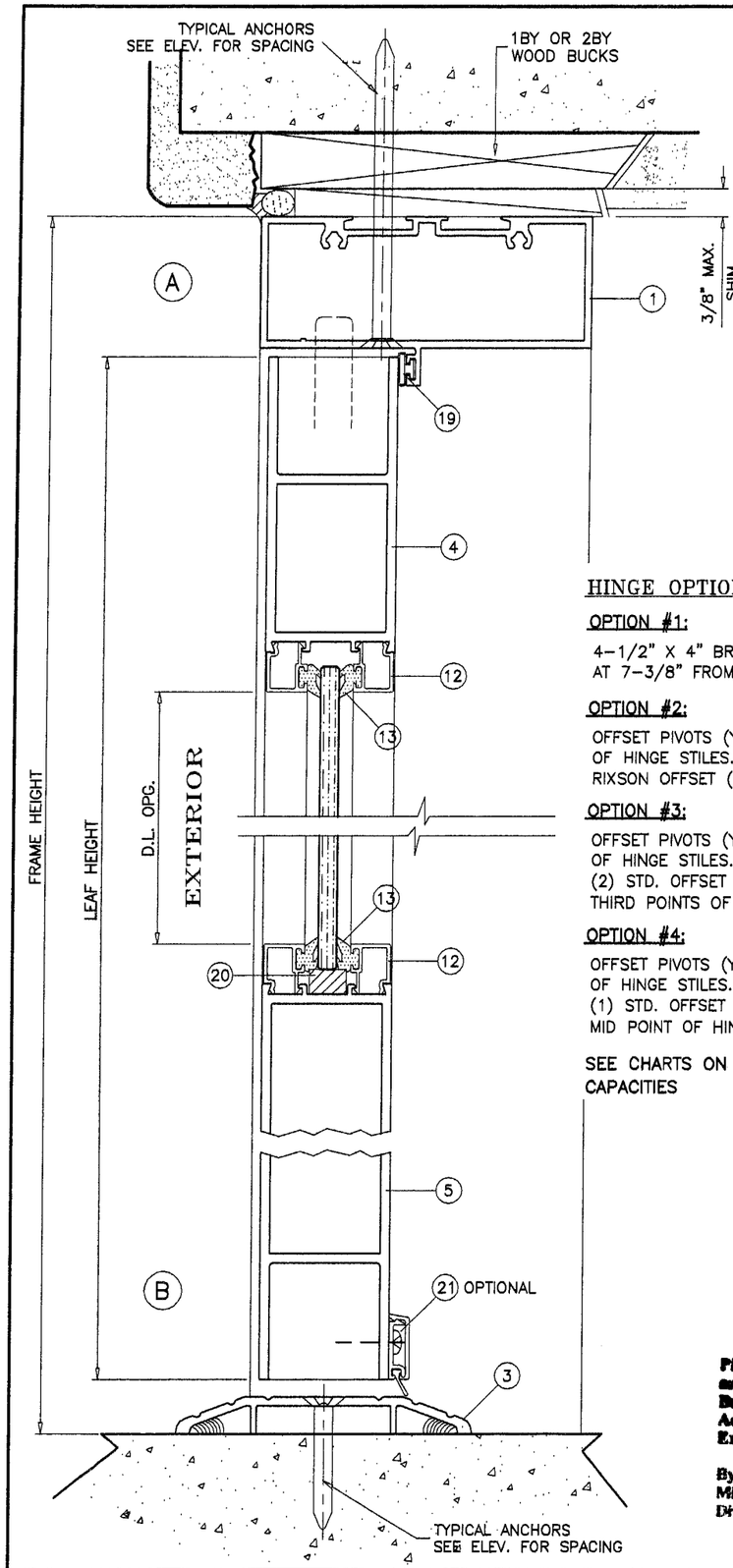


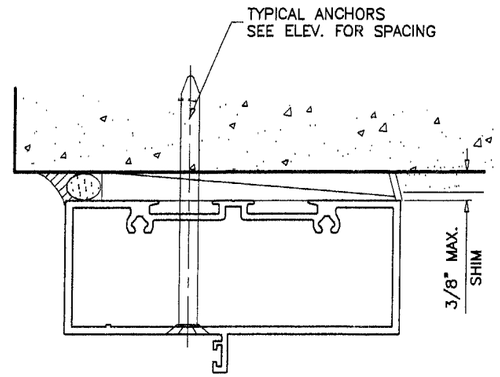


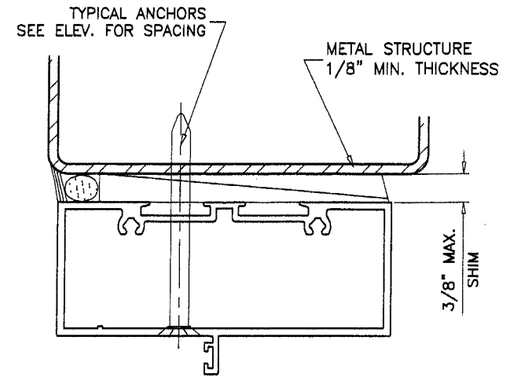


## HINGE OPTIONS:

**OPTION #1:**

4-1/2" X 4" BRASS BUTT HINGES (YKK #H-2301)
AT 7-3/8" FROM TOP & BOTTOM AND ONE AT MIDPOINT.

**OPTION #2:**

OFFSET PIVOTS (YKK #H-2101/2102) AT TOP & BOTTOM OF HINGE STILES.
RIXSON OFFSET (#M 19) AT MIDPOINT OF HINGE STILES.

**OPTION #3:**

OFFSET PIVOTS (YKK #H-2101/2102) AT TOP & BOTTOM OF HINGE STILES.
(2) STD. OFFSET PIVOT (YKK #H-2201/2202) AT THIRD POINTS OF HINGE STILE.

**OPTION #4:**

OFFSET PIVOTS (YKK #H-2101/2102) AT TOP & BOTTOM OF HINGE STILES.
(1) STD. OFFSET PIVOT (YKK #H-2201/2202) AT MID POINT OF HINGE STILE.

SEE CHARTS ON SHEETS 1 & 2 FOR DESIGN LOAD CAPACITIES

PRODUCT REVIEWED
as complying with the Florida
Building Code:
Acceptance No. 030916.03
Expiration Date 04/16/07
By [signature]
Miami/Dade Product Control
Division

## LOCK OPTIONS SINGLE DOORS:

**OPTION #1:**

3 POINT LOCK (YKK #H-4201)
WITH LOCK CYLINDER AT 32" OR 41-13/16" FROM BOTTOM.

STD. PUSH/PULL BAR AT 45" FROM BOTTOM

**OPTION #2:**

DOR-O-MATIC 1490 SERIES (YKK #P2362) OR
DOR-O-MATIC 1690 SERIES (YKK #P52497) OR
DOR-O-MATIC 1990 SERIES (YKK #P2323)
CONCEALED VERTICAL ROD TOUCH BAR EXIT DEVICE
WITH KEY CYLINDER AT 42" FROM BOTTOM

## LOCK OPTIONS DOUBLE DOORS:

**OPTION #1:**

ACTIVE LEAF:

3 POINT LOCK (YKK #H-4201)
WITH LOCK CYLINDER AT 32" OR 41-13/16" FROM BOTTOM.

STD. PUSH/PULL BAR AT 45" FROM BOTTOM

INACTIVE LEAF

STD. LEVER TYPE FLUSH BOLTS (YKK #H-4101)
AT 8" FROM EACH END OF MTG. STILE.

STD. PUSH/PULL BAR AT 45" FROM BOTTOM

**OPTION #2:**

ACTIVE LEAF:

DOR-O-MATIC 1490 SERIES (YKK #P2362) OR
DOR-O-MATIC 1690 SERIES (YKK #P52497) OR
DOR-O-MATIC 1990 SERIES (YKK #P2323)
CONCEALED VERTICAL ROD TOUCH BAR EXIT DEVICE
WITH KEY CYLINDER AT 42" FROM BOTTOM

INACTIVE LEAF

DOR-O-MATIC 1490 SERIES (YKK #P2362) OR
DOR-O-MATIC 1690 SERIES (YKK #P52497) OR
DOR-O-MATIC 1990 SERIES (YKK #P2323)
CONCEALED VERTICAL ROD TOUCH BAR EXIT DEVICE
WITHOUT KEY CYLINDER AT 42" FROM BOTTOM

NOTE: TOP AND BOTTOM FLUSH BOLTS MUST BE ENGAGED DURING PERIODS OF HURRICANE WARNING.

## TYPICAL ANCHORS: SEE ELEV. FOR SPACING

A) **1/4" DIA TAPCONS**
INTO WOOD STRUCTURES
WITH 1-1/2" MIN. PENETRATION INTO WOOD

THRU WOOD BUCKS INTO MASONRY
WITH 1-1/4" MIN. EMBED INTO CONC. OR MASONRY

B) **1/4" DIA TAPCONS**
DIRECTLY INTO MASONRY
WITH 1-1/4" MIN. EMBED INTO MASONRY

C) **#14 WOOD SCREWS**
INTO WOOD STRUCTURES
WITH 1-1/2" MIN. PENETRATION INTO WOOD

D) **1/4-20 KWIK-FLEX SELF DRILLING SCREWS BY 'HILTI'**
INTO METAL STRUCTURES
(STEEL OR ALUMINUM 1/8" MIN. THICK.)

STEEL : Fy = 36 KSI MIN.
ALUMINUM : 6063-T5 MIN.

**TYPICAL EDGE DISTANCE**

INTO CONCRETE AND MASONRY = 3" MIN.
INTO WOOD STRUCTURE = 3/4" MIN.

## SEALANTS:

ALL FRAME CORNERS SEALED WITH TREMCO SPECTREM 2 OR DOW 795 SILICONE.

Engr: DR. HUMAYOUN FAROOQ
STRUCTURES
FLA. PE # 16557
C.A.N. 3538

OCT 16 2003

AL-FAROOQ CORPORATION
ENGINEERS, PLANNERS & PRODUCT DESIGN
1235 SW 87 AVE
MIAMI, FLORIDA 33174
TEL. (305) 264-8100 FAX. (305) 262-6978
COMP-ANL\W03-37YKK

35D MEDIUM STILE ALUM OUTSWING ENTRANCE DOOR

YKK AP AMERICA INC.
332 FIRETOWER ROAD
DUBLIN, GEORGIA 31021
TEL.(478) 277-1955 FAX(478) 277-1978

revisions:

| no | date | by | description |
|---|---|---|---|
| A | 10.07.03 | | NO CHANGE THIS SHEET |

date: 06-24-03
scale: 1/2" = 1"
dr. by: HAMID
chk. by:

drawing no.
W03-47

WOOD BUCKS AND METAL STRUCTURES NOT BY YKK INC. MUST SUPPORT LOADS IMPOSED BY GLAZING SYSTEM AND TRANSFER THEM TO THE BUILDING STRUCTURE.

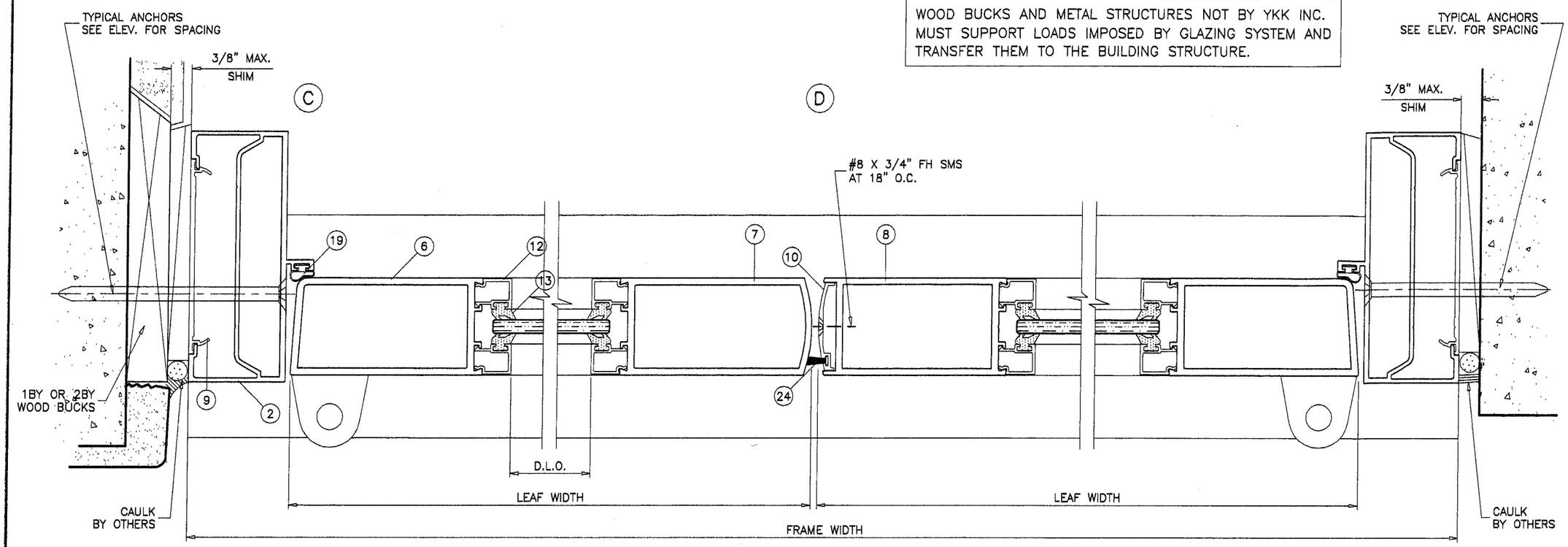


EXTERIOR

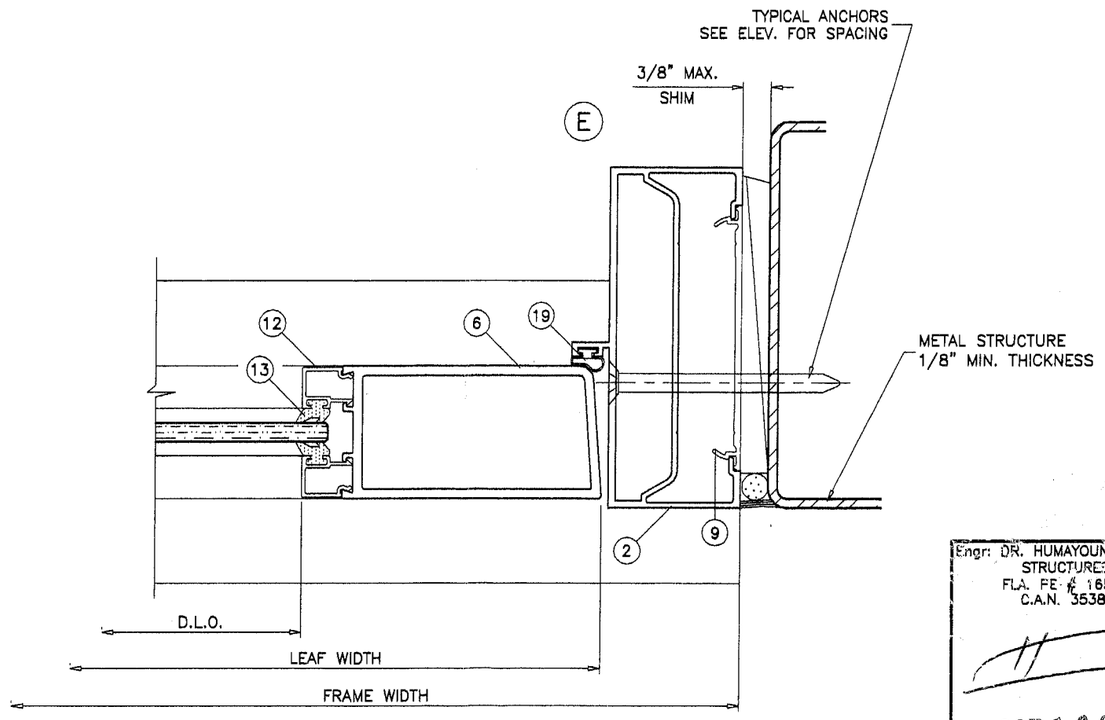


**PRODUCT REVISED**
**as complying with the Florida Building Code**
**Acceptance No** 03-0916.03
**Expiration Date** 04/16/07
**By** [signature]
**Miami Dade Product Control Division**

Engr: DR. HUMAYOUN FAROOQ
STRUCTURES
FLA. PE # 16557
C.A.N. 3538

OCT 16 2003

35D MEDIUM STILE ALUM OUTSWING ENTRANCE DOOR

YKK ap™

YKK AP AMERICA INC.
332 FIRETOWER ROAD
DUBLIN, GEORGIA 31021
TEL.(478) 277-1955 FAX(478) 277-1978

AL-FAROOQ CORPORATION
ENGINEERS, PLANNERS & PRODUCT DESIGN
1235 SW 87 AVE
MIAMI, FLORIDA 33174
TEL. (305) 264-8100 FAX. (305) 262-6978
COMP-ANL\W03-37YKK

revisions:

| no | date | by | description |
|---|---|---|---|
| A | 10.07.03 | | NO CHANGE THIS SHEET |

date: 06-24-03
scale: 1/2" = 1"
dr. by: HAMID
chk. by:

drawing no.
W03-47

sheet 7 of 11

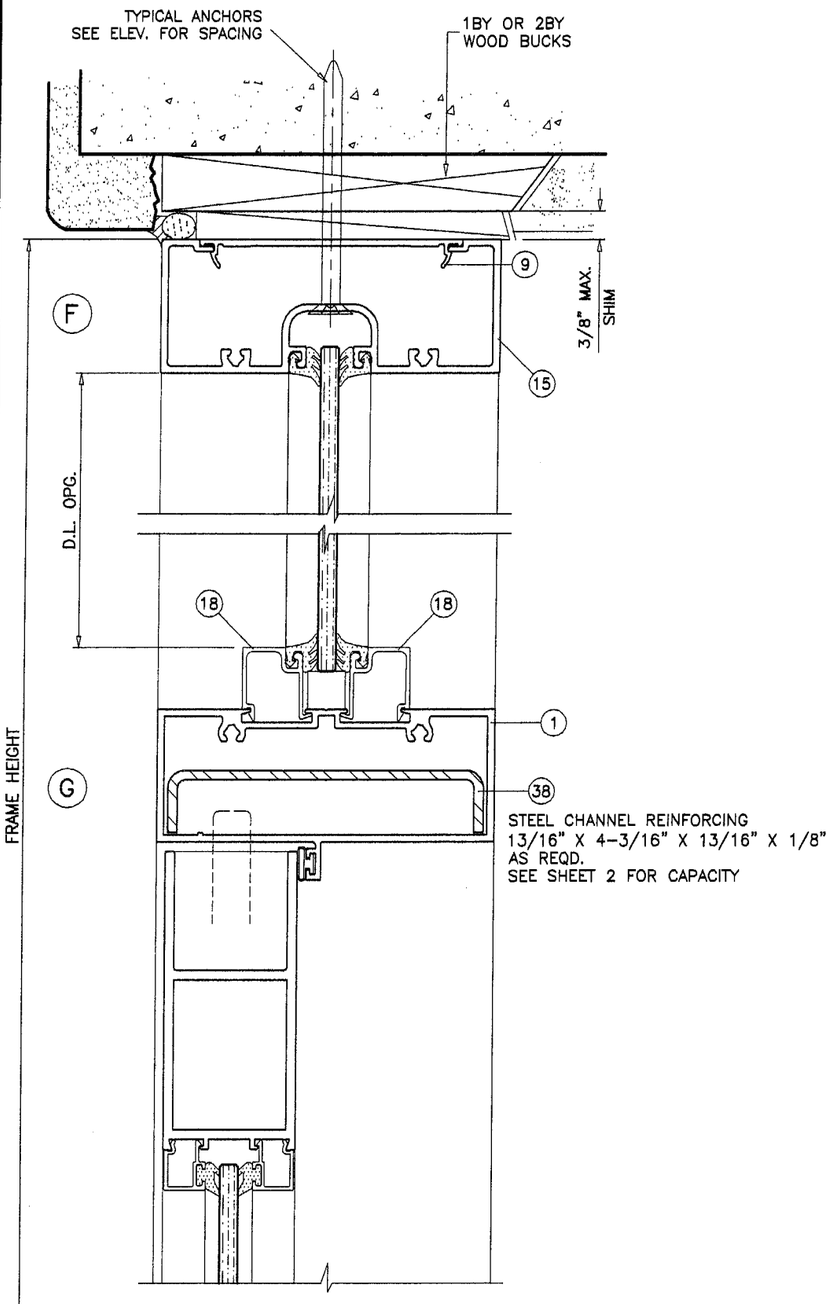


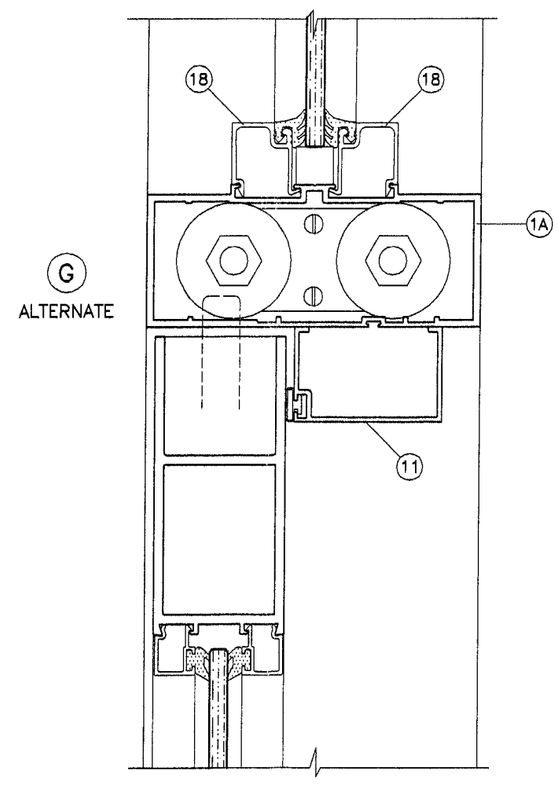


PRODUCT REVISED
as complying with the Florida
Building Code
Acceptance No 03-0916.03
Expiration Date 04/16/07
By [signature]
Miami Dade Product Control
Division

Engr: DR. HUMAYOUN FAROOQ
STRUCTURES
FLA. PE # 16557
C.A.N. 3538
[signature]
OCT 16 2003

AL-FAROOQ CORPORATION
ENGINEERS, PLANNERS & PRODUCT DESIGN
1235 SW 87 AVE
MIAMI, FLORIDA 33174
TEL. (305) 264-8100 FAX. (305) 262-6978
COMP-ANL\W03-37YKK

35D MEDIUM STILE ALUM OUTSWING ENTRANCE DOOR

YKK AP AMERICA INC.
332 FIRETOWER ROAD
DUBLIN, GEORGIA 31021
TEL.(478) 277-1955 FAX(478) 277-1978

revisions:

| no | date | by | description |
|---|---|---|---|
| A | 10.07.03 | | NO CHANGE THIS SHEET |

date: 06-24-03
scale: 1/2" = 1"
dr. by: HAMID
chk. by:

drawing no.
W03-47

sheet 8 of 11

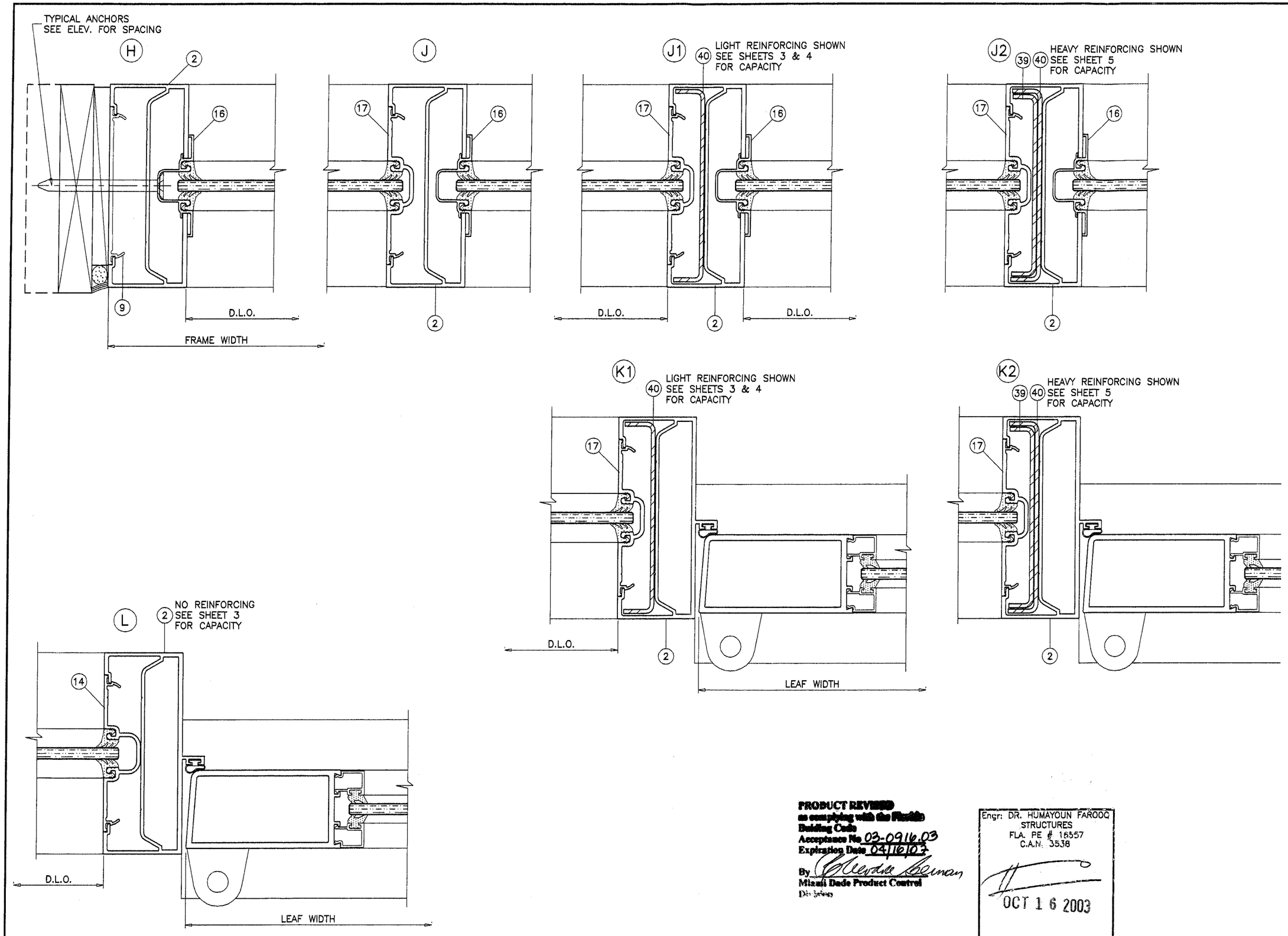


**PRODUCT REVIEWED**
**as complying with the Florida**
**Building Code**
**Acceptance No** 03-0916.03
**Expiration Date** 04/16/07
**By** [signature]
**Miami Dade Product Control**
**Division**

Engr: DR. HUMAYOUN FAROOQ
STRUCTURES
FLA. PE # 16557
C.A.N. 3538

OCT 1 6 2003


AL-FAROOQ CORPORATION
ENGINEERS, PLANNERS & PRODUCT DESIGN
1235 SW 87 AVE
MIAMI, FLORIDA 33174
TEL (305) 264-8100 FAX. (305) 262-6978
COMP-ANL\W03-37YKK


35D MEDIUM STILE ALUM OUTSWING ENTRANCE DOOR


YKK AP AMERICA INC.
332 FIRETOWER ROAD
DUBLIN, GEORGIA 31021
TEL(478) 277-1955 FAX(478) 277-1978


revisions:

| no | date | by | description |
|---|---|---|---|
| A | 10.07.03 | | REV. PER BCCO COMMENTS |

date: 06-24-03
scale: 1/2" = 1"
dr. by: HAMID
chk. by:

drawing no.
W03-47

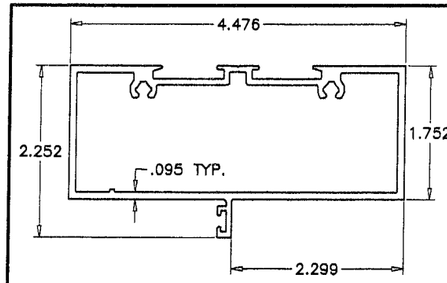


FRAME HEAD

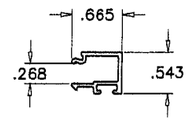


DOOR GLAZING BEAD

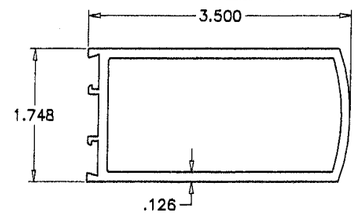


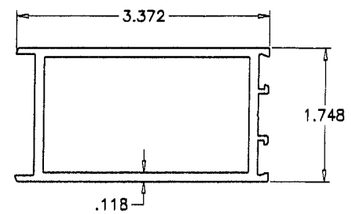


DOOR LEAF MTG. STILES

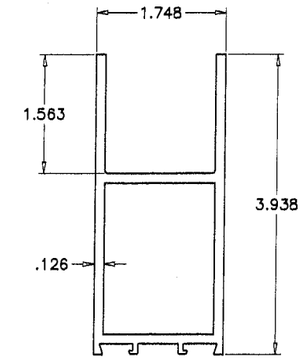


DOOR TOP RAIL

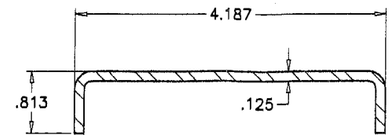


HORIZONTAL REINFORCING CHANNEL

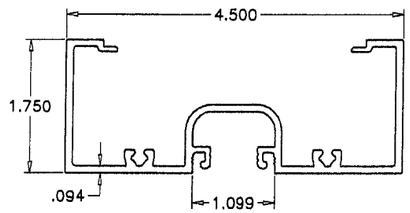


TRANSOM HEAD

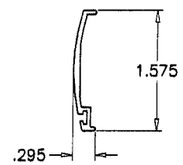


MTG. STILE COVER

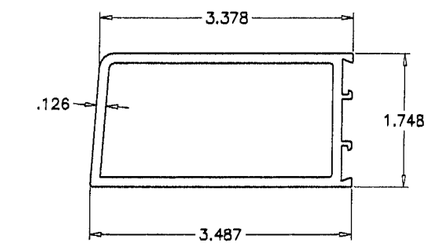


DOOR LEAF VERT. STILE

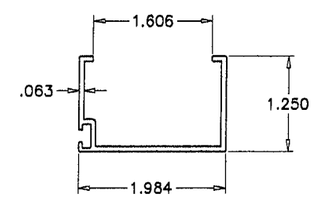


DOOR STOP

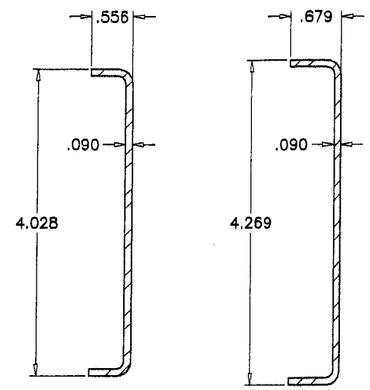


MULLION REINFORCING CHANNELS

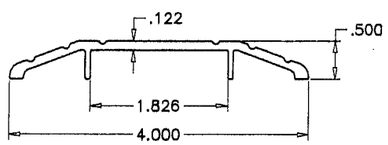


THRESHOLD

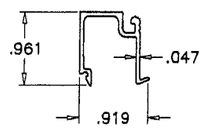


TRANSOM GLAZING BEAD

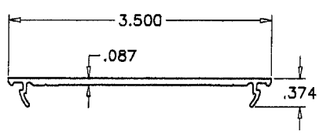


SHEAR PLATE

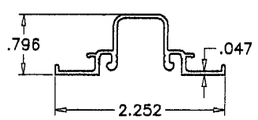


TRANSOM GLAZING POCKET

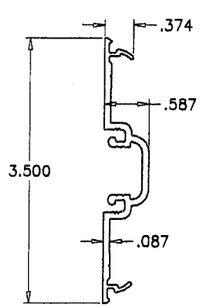


SNAP COVER
W/ GLAZING POCKET (SHALLOW)

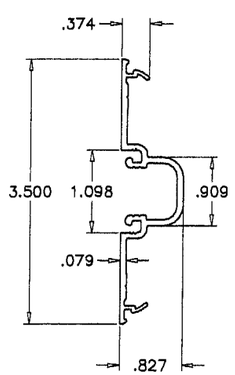


SNAP COVER
W/ GLAZING POCKET (DEEP)

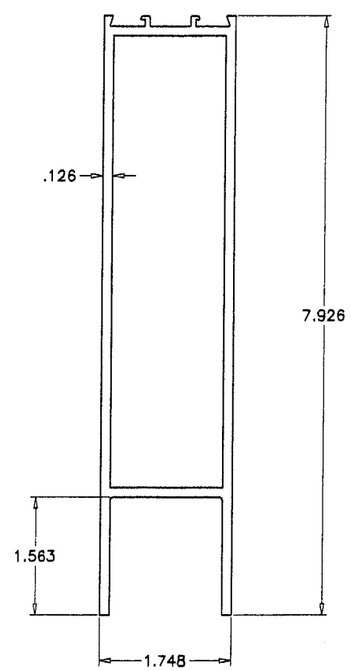


DOOR LEAF BOTTOM RAIL

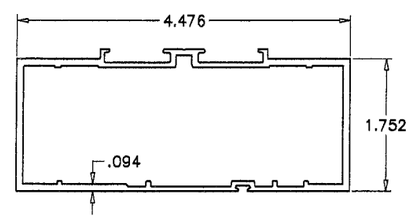


ALT. FRAME HEAD

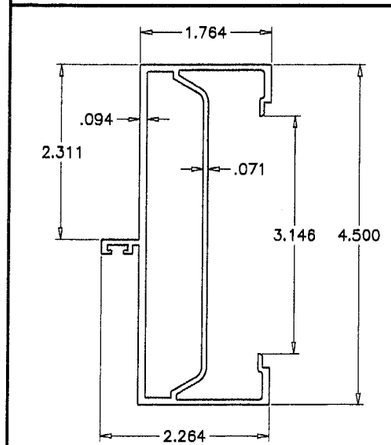


FRAME JAMB

**PRODUCT REVIEWED**
**as complying with the Florida Building Code**
**Acceptance No** 03-0916.03
**Expiration Date** 04/16/03
**By** [signature]
**Miami Dade Product Control Division**

Engr: DR. HUMAYOUN FAROOQ
STRUCTURES
FLA. PE # 16557
C.A.N. 3538

OCT 1 6 2003


AL-FAROOQ CORPORATION
ENGINEERS, PLANNERS & PRODUCT DESIGN
1235 SW 87 AVE
MIAMI, FLORIDA 33174
TEL. (305) 264-8100 FAX. (305) 262-6978
COMP-ANL\W03-37YKK


35D MEDIUM STILE ALUM OUTSWING ENTRANCE DOOR


YKK AP AMERICA INC.
332 FIRETOWER ROAD
DUBLIN, GEORGIA 31021
TEL.(478) 277-1955 FAX(478) 277-1978


revisions:

| no | date | by | description |
|---|---|---|---|
| A | 10.07.03 | | REV. PER BCCO COMMENTS |

date: 06-24-03
scale: 1/2" = 1"
dr. by: HAMID
chk. by:

drawing no.
W03-47

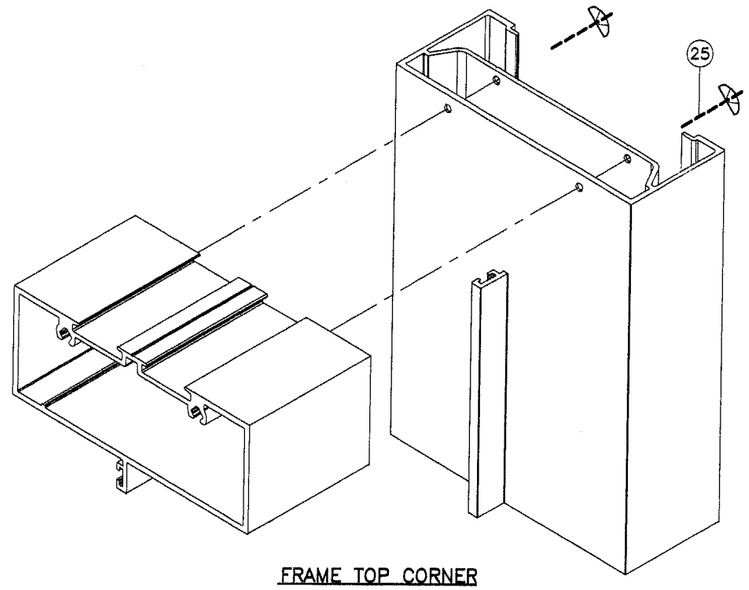


FRAME TOP CORNER

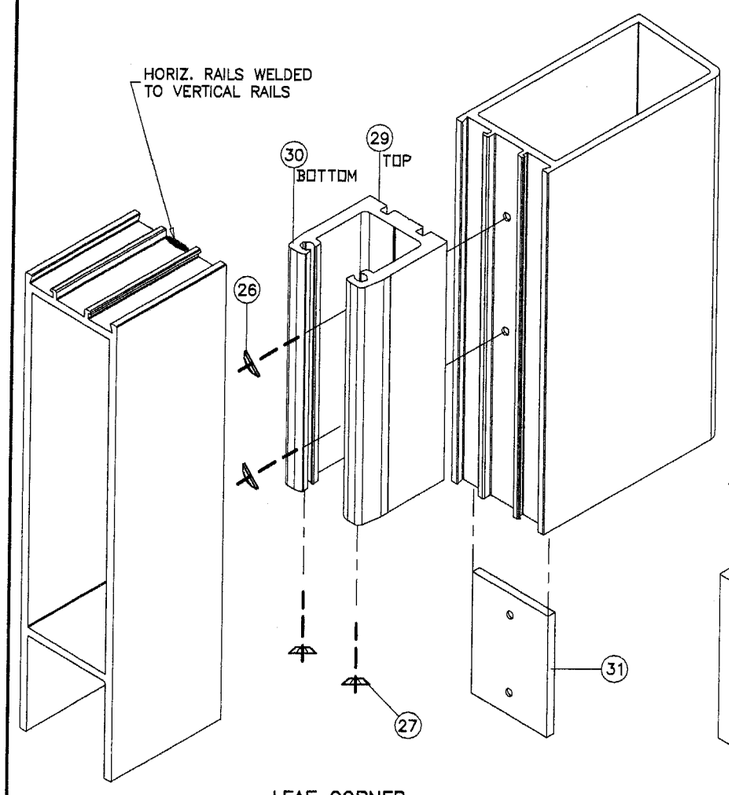


LEAF CORNER

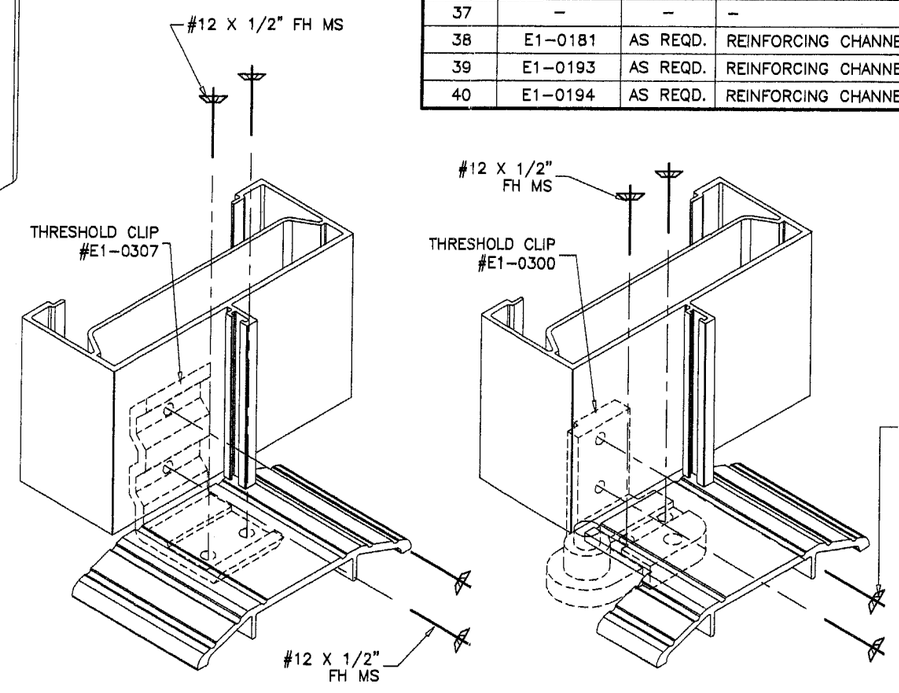


FRAME BOTTOM CORNER

| ITEM # | PART # | QUANTITY | DESCRIPTION | MATERIAL | MANF./SUPPLIER/REMARKS |
|---|---|---|---|---|---|
| 1 | E9-0402 | 1 | FRAME HEAD | 6063-T5 | YKK AP AMERICA |
| 1A | E9-0425 | 1 | ALT. FRAME HEAD | 6063-T5 | YKK AP AMERICA |
| 2 | E9-0421 | 2 | DOOR FRAME JAMB | 6063-T5 | YKK AP AMERICA |
| 3 | E9-0407 | 1 | THRESHOLD | 6063-T5 | YKK AP AMERICA |
| 4 | E9-0306 | 1/ LEAF | TOP RAIL | 6063-T5 | YKK AP AMERICA |
| 5 | E9-0317 | 1 | BOTTOM RAIL | 6063-T5 | YKK AP AMERICA |
| 6 | E9-0308 | 1,2/ LEAF | DOOR LEAF VERT. STILE | 6063-T5 | YKK AP AMERICA |
| 7 | E9-0310 | 1/ LEAF | DOOR LEAF - MTG. STILE (INACTIVE) | 6063-T5 | AT DOUBLE DOORS |
| 8 | E9-0330 | 1/ LEAF | DOOR LEAF - MTG. STILE (ACTIVE) | 6063-T5 | AT DOUBLE DOORS |
| 9 | E1-1054 | AS REQD. | SHEAR PLATE @ ANCHOR LOCATIONS | 6063-T5 | 2-1/2"" LONG |
| 10 | E9-0332 | 1 | MEETING STILE COVER | 6063-T5 | AT DOUBLE DOORS |
| 11 | E9-0215 | 1 | DOOR STOP | 6063-T5 | YKK AP AMERICA |
| 12 | E9-0314 | AS REQD. | GLAZING BEAD (STANDARD) | 6063-T5 | YKK AP AMERICA |
| 13 | E2-0050 | AS REQD. | GLAZING GASKET | EPDM | - |
| 14 | E9-1009 | AS REQD. | SNAP COVER W/ GLAZING POCKET (DEEP) | 6063-T5 | YKK AP AMERICA |
| 15 | E9-1003 | AS REQD. | TRANSOM HEAD | 6063-T5 | YKK AP AMERICA |
| 16 | E9-0434 | AS REQD. | TRANSOM GLAZING POCKET | 6063-T5 | YKK AP AMERICA |
| 17 | E9-1002 | AS REQD. | SNAP COVER W/ GLAZING POCKET (SHALLOW) | 6063-T5 | YKK AP AMERICA |
| 18 | E9-0403 | AS REQD. | TRANSOM GLAZING BEAD | 6063-T5 | YKK AP AMERICA |
| 19 | E2-0051 | AS REQD. | BULB WEATHERSTRIPPING | PVC | - |
| 20 | E2-0054 | 1/LEAF | SETTING BLOCK | EPDM | - |
| 21 | H-7107 | OPTIONAL | DOOR SWEEP PACKAGE | - | - |
| 24 | E2-0087 | AS REQD. | PILE WEATHERSTRIPPING | - | - |
| 25 | PC-1216 | AS REQD. | FRAME ASSY. SCREWS | - | #12 X 1" PAN HEAD SMS |
| 26 | - | 2/CORNER | 3/8"-16 X 5/8" SCREWS | - | - |
| 27 | - | 2/CORNER | #10 X 1" FH SMS | - | - |
| 29 | E1-0308 | 2/ LEAF | JOINT CLIP FOR TOP RAIL | 6063-T5 | - |
| 30 | E1-0309 | 2/ LEAF | JOINT CLIP FOR BOTTOM RAIL | 6063-T5 | - |
| 31 | E1-0311 | 4/ LEAF | BACKER PLATE | - | - |
| 33 | - | AS REQD. | PUSH-PULL HARDWARE | - | - |
| 37 | - | - | - | - | - |
| 38 | E1-0181 | AS REQD. | REINFORCING CHANNEL | STEEL | .813 X 4.187 X .813 X .125" |
| 39 | E1-0193 | AS REQD. | REINFORCING CHANNEL | STEEL | .556 X 4.028 X .556 X .090" |
| 40 | E1-0194 | AS REQD. | REINFORCING CHANNEL | STEEL | .679 X 4.269 X .679 X .090" |

**PRODUCT REVISED**
**as complying with the Florida**
**Building Code**
**Acceptance No.** 03-0916.03
**Expiration Date** 04/16/07
**By** [signature]
**Miami Dade Product Control**
**Division**

Engr: DR. HUMAYOUN FAROOQ
STRUCTURES
FLA. PE # 16557
C.A.N. 3538

OCT 16 2003

**AL-FAROOQ CORPORATION**
ENGINEERS, PLANNERS & PRODUCT DESIGN
1235 SW 87 AVE
MIAMI, FLORIDA 33174
TEL. (305) 264-8100 FAX. (305) 262-6978
COMP-ANL\W03-37YKK

35D MEDIUM STILE ALUM OUTSWING ENTRANCE DOOR

**YKK AP AMERICA INC.**
332 FIRETOWER ROAD
DUBLIN, GEORGIA 31021
TEL.(478) 277-1955 FAX(478) 277-1978

revisions:

| no | date | by | description |
|---|---|---|---|
| A | 10.07.03 | | REV. PER BCCO COMMENTS |

date: 06-24-03
scale: 1/2" = 1"
dr. by: HAMID
chk. by:

drawing no.
W03-47

sheet 11 of 11