MIAMI-DADE

**BUILDING CODE COMPLIANCE OFFICE (BCCO)**
**PRODUCT CONTROL DIVISION**

**MIAMI-DADE** COUNTY, FLORIDA
METRO-DADE FLAGLER BUILDING
**140 WEST FLAGLER STREET, SUITE 1603**
MIAMI, FLORIDA 33130-1563
(305) 375-2901 FAX (305) 375-2908

# NOTICE OF ACCEPTANCE (NOA)

**Firedoor Corporation of Florida**
**1350 N. W. 74th Street**
**Miami, Fl. 33147**

**SCOPE:**
This NOA is being issued under the applicable rules and regulations governing the use of construction materials. The documentation submitted has been reviewed by Miami-Dade County Product Control Division and accepted by the Board of Rules and Appeals (BORA) to be used in Miami Dade County and other areas where allowed by the Authority Having Jurisdiction (AHJ).

This NOA shall not be valid after the expiration date stated below. The Miami-Dade County Product Control Division (In Miami Dade County) and/or the AHJ (in areas other than Miami Dade County) reserve the right to have this product or material tested for quality assurance purposes. If this product or material fails to perform in the accepted manner, the manufacturer will incur the expense of such testing and the AHJ may immediately revoke, modify, or suspend the use of such product or material within their jurisdiction. BORA reserves the right to revoke this acceptance, if it is determined by Miami-Dade County Product Control Division that this product or material fails to meet the requirements of the applicable building code.

This product is approved as described herein, and has been designed to comply with the High Velocity Hurricane Zone of the Florida Building Code.
**DESCRIPTION: Series 1210 Steel Storefront System**
**APPROVAL DOCUMENT:** Drawing No. **W02-47** titled "Series 1210 Steel Storefront System" Sheets 1 through 6 of 6, prepared by Al-Farooq Corporation, dated 05-13-02 and last revised on 11-12-03, signed and sealed by Dr. Humayuon Farooq, P. E., bearing the Miami-Dade County Product Control Revision stamp with the Notice of Acceptance number and expiration date by the Miami-Dade County Product Control Division.
**MISSILE IMPACT RATING: Large Missile Impact Resistant**
**LABELING:** Each unit shall bear a permanent label with the manufacturer's name or logo, city, state and following statement: "Miami-Dade County Product Control Approved", unless otherwise noted herein.
**RENEWAL** of this NOA shall be considered after a renewal application has been filed and there has been no change in the applicable building code negatively affecting the performance of this product.
**TERMINATION** of this NOA will occur after the expiration date or if there has been a revision or change in the materials, use, and/or manufacture of the product or process. Misuse of this NOA as an endorsement of any product, for sales, advertising or any other purposes shall automatically terminate this NOA. Failure to comply with any section of this NOA shall be cause for termination and removal of NOA.
**ADVERTISEMENT:** The NOA number preceded by the words Miami-Dade County, Florida, and followed by the expiration date may be displayed in advertising literature. If any portion of the NOA is displayed, then it shall be done in its entirety.
**INSPECTION:** A copy of this entire NOA shall be provided to the user by the manufacturer or its distributors and shall be available for inspection at the job site at the request of the Building Official.
This NOA **revises** NOA **# 02-0906.04** consists of this page 1 and evidence page, as well as, approval document mentioned above.
The submitted documentation was reviewed by **Ishaq I. Chanda, P.E.**

8
11/13/13

PRODUCT CONTROL ACCEPTED

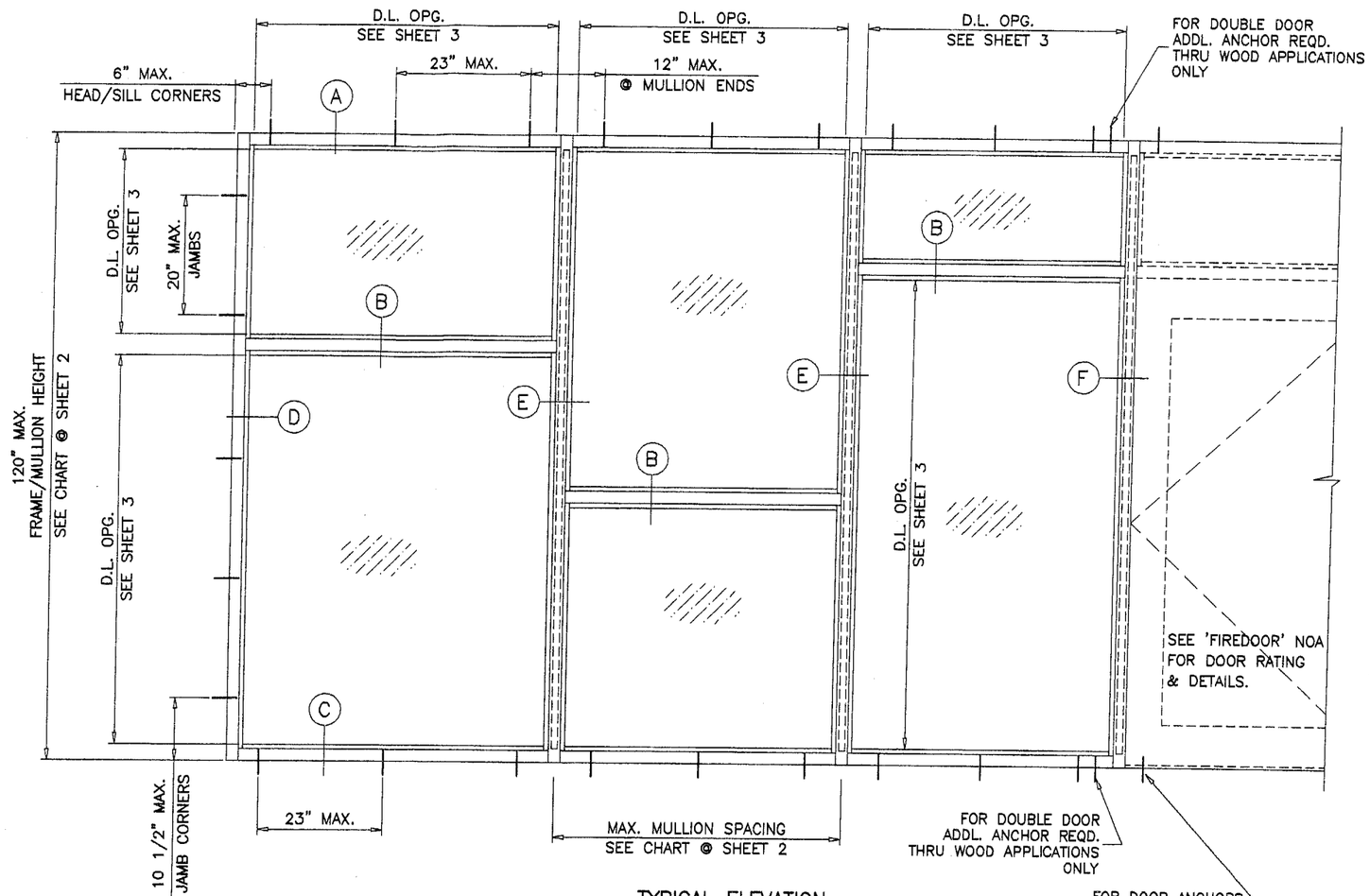


TYPICAL ELEVATION

## SERIES 1210-IG STEEL STOREFRONT SYSTEM

STOREFRONT SYSTEM IS RATED FOR LARGE MISSILE IMPACT.
SHUTTERS ARE NOT REQUIRED.

THIS SYSTEM MAY BE USED IN CONJUNCTION WITH MIAMI-DADE COUNTY APPROVED ENTRANCE DOORS BY 'FIREDOOR'.

SEE CHART ON SHEET 2 TO DETERMINE DESIGN LOAD CAPACITY OF MULLIONS.
SEE CHART ON SHEET 3 TO DETERMINE DESIGN LOAD CAPACITY OF VARIOUS TYPES OF GLASS.
CODE REQUIREMENTS FOR SAFEGUARDS MUST BE OBSERVED.

THIS PRODUCT IS DESIGNED TO COMPLY WITH THE HIGH VELOCITY HURRICANE ZONE OF THE 2001 FLORIDA BUILDING CODE.
ALSO FOR WIND LOADS AS PER ASCE 7 USING CORRESPONDING LOADS.

WOOD BUCKS BY OTHERS, MUST BE ANCHORED PROPERLY TO TRANSFER LOADS TO THE STRUCTURE.

ANCHORS SHALL BE AS LISTED, SPACED AS SHOWN ON DETAILS. ANCHOR EMBEDMENT TO BASE MATERIAL SHALL BE BEYOND WALL DRESSING OR STUCCO.

ANCHORING OR LOADING CONDITIONS NOT SHOWN IN THESE DETAILS ARE NOT PART OF THIS APPROVAL.

**PRODUCT REVISED**
**as complying with the Florida Building Code**
**Acceptance No** 03-0923.04
**Expiration Date** NOVEMBER 21, 2007
**By** Ishaq I. Chanda
**Miami Dade Product Control Division**

## INSTRUCTIONS:

USE CHARTS AS FOLLOWS.

STEP 1 DETERMINE DESIGN WIND LOAD REQUIREMENT BASED ON WIND VELOCITY, BLDG. HEIGHT, WIND ZONE USING APPLICABLE ASCE 7 STANDARD.

STEP 2 CHECK MULLION CAPACITY FOR A GIVEN SPACING AND HEIGHT USING CHART ON SHEET 2.
THE CAPACITY SHOULD EXCEED THE DESIGN LOAD.

STEP 3 SEE CHARTS ON SHEETS ON SHEET 3 FOR CAPACITY OF DESIRED GLASS SIZE.

Engr: DR. HUMAYOUN FAROOQ
STRUCTURES
FLA. PE # 16557

NOV 12 2003


AL-FAROOQ CORPORATION
ENGINEERS, PLANNERS & PRODUCT DESIGN
1235 SW 87 AVE
MIAMI, FLORIDA 33174
TEL. (305) 264-8100 FAX. (305) 262-6978
STORE\W02-47FDC


SERIES 1210 STEEL STOREFRONT SYS. (L.M.)


FIREDOOR CORPORATION
1350 N.W. 74TH STREET
MIAMI, FL. 33147
FIREDOOR TEL.(305) 691-1500 FAX(305) 836-4797


revisions:

| no | date | by | description |
|---|---|---|---|
| A | 10.01.02 | | REV. PER BCCO COMMENTS |
| B | 10.29.02 | | REV. PER BCCO COMMENTS |
| C | 08.02.03 | | NO CHANGE THIS SHEET |

date: 05-13-02
scale: 1/2"=1'-0"
dr. by: HAMID
chk. by:

drawing no.
W02-47

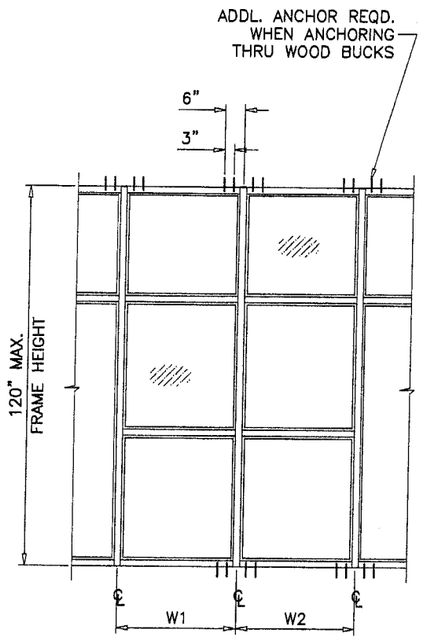


$$\text{WIDTH (W)} = \frac{W1 + W2}{2}$$

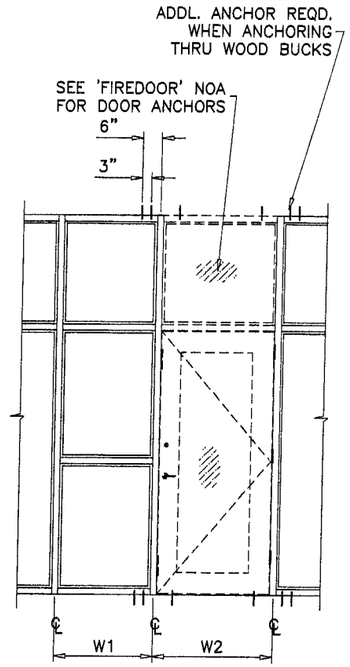


$$\text{WIDTH (W)} = \frac{W1 + W2}{2}$$

| MULLION LOAD CAPACITY - PSF | | | |
|---|---|---|---|
| NOMINAL DIMS. | | MULLION | |
| WIDTH (W) | FRAME HT. | EXT. (+) | INT. (−) |
| 36" | 84" | 75.0 | 75.0 |
| 39" | | 75.0 | 75.0 |
| 42" | | 75.0 | 75.0 |
| 45" | | 75.0 | 75.0 |
| 48" | | 75.0 | 75.0 |
| 51" | | 75.0 | 75.0 |
| 36" | 90" | 75.0 | 75.0 |
| 39" | | 75.0 | 75.0 |
| 42" | | 75.0 | 75.0 |
| 45" | | 75.0 | 75.0 |
| 48" | | 75.0 | 75.0 |
| 36" | 96" | 75.0 | 75.0 |
| 39" | | 75.0 | 75.0 |
| 42" | | 75.0 | 75.0 |
| 45" | | 75.0 | 75.0 |
| 36" | 102" | 75.0 | 75.0 |
| 39" | | 75.0 | 75.0 |
| 42" | | 75.0 | 75.0 |
| 36" | 108" | 75.0 | 75.0 |
| 39" | | 75.0 | 75.0 |
| 36" | 114" | 75.0 | 75.0 |
| 36" | 120" | 75.0 | 75.0 |

| MULLION LOAD CAPACITY-PSF | | | |
|---|---|---|---|
| WIDTH-W1 INCHES | WIDTH-W2 INCHES | LENGTH-L INCHES | MULLION EXT.(+) & INT.(−) |
| 74" | 24" | 102" | 75.0 |
| | 27" | | 75.0 |
| | 30" | | 75.0 |
| | 33" | | 75.0 |
| | 36" | | 75.0 |
| | 42" | | 75.0 |
| 74" | 24" | 108" | 75.0 |
| | 27" | | 75.0 |
| | 30" | | 75.0 |
| | 33" | | 75.0 |
| | 36" | | 75.0 |
| | 42" | | 75.0 |
| 74" | 24" | 114" | 75.0 |
| | 27" | | 75.0 |
| | 30" | | 75.0 |
| | 33" | | 75.0 |
| | 36" | | 75.0 |
| 74" | 24" | 120" | 75.0 |
| | 27" | | 75.0 |
| | 30" | | 75.0 |
| | 33" | | 75.0 |
| | 36" | | 75.0 |

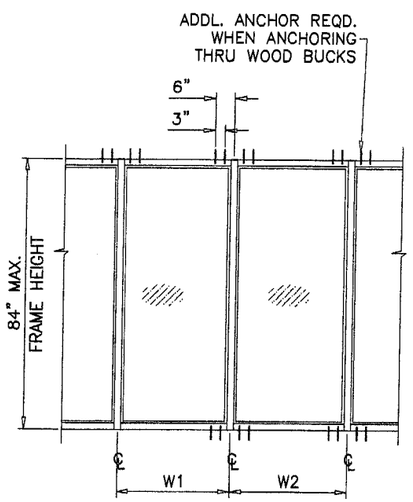


$$\text{WIDTH (W)} = \frac{W1 + W2}{2}$$

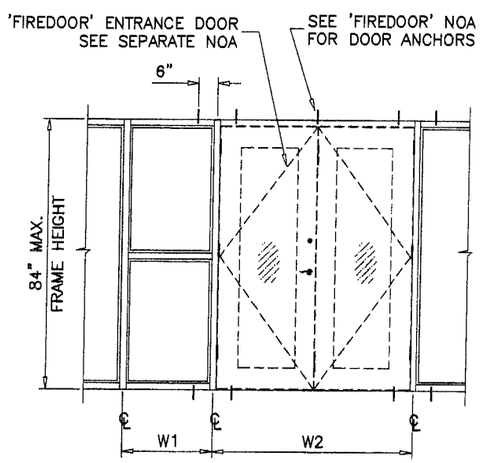


$$\text{WIDTH (W)} = \frac{W1}{2} + \frac{W2}{4}$$

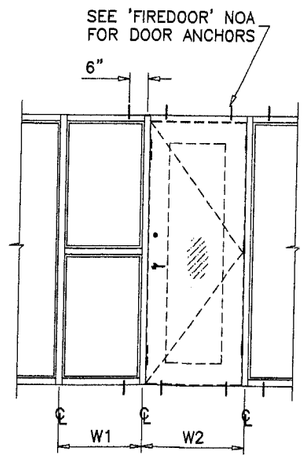


$$\text{WIDTH (W)} = \frac{W1 + W2}{2}$$

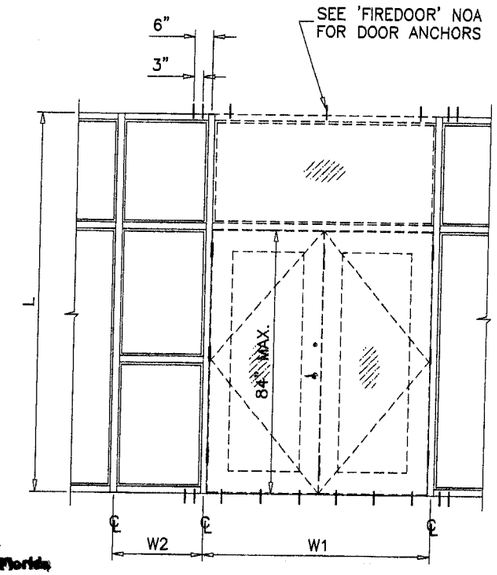


$$\text{WIDTH (W)} = \frac{W1 + W2}{2}$$

**PRODUCT REVISED**
**as complying with the Florida Building Code**
**Acceptance No** 03-0923.04
**Expiration Date** NOV 21, 2007
**By** Ishaq I. Chanda
**Miami Dade Product Control Division**

Engr: DR. HUMAYOUN FAROOQ
STRUCTURES
FLA. PE # 16557

NOV 12 2003

## MULLION CAPACITY CHARTS

TO VERIFY GLASS OPTIONS AND CAPACITIES SEE CHARTS ON SHEET 3.


AL-FAROOQ CORPORATION
ENGINEERS, PLANNERS & PRODUCT DESIGN
1235 SW 87 AVE
MIAMI, FLORIDA 33174
TEL. (305) 264-8100 FAX. (305) 262-6978


STORE\W02-47FDC

SERIES 1210 STEEL STOREFRONT SYS. (L.M.)


FIREDOOR CORPORATION
1350 N.W. 74TH STREET
MIAMI, FL. 33147
TEL.(305) 691-1500 FAX(305) 836-4797


FIREDOOR

revisions:

| no | date | by | description |
|---|---|---|---|
| A | 10.01.02 | | REV. PER BCCO COMMENTS |
| B | 10.29.02 | | REV. PER BCCO COMMENTS |
| C | 08.02.03 | | MULLION CHART ADDED |

date: 05-13-02
scale: 1/2"=1'-0"
dr. by: HAMID
chk. by:

drawing no.
W02-47

# GLASS CHARTS

| GLASS DESIGN LOAD CAPACITY – PSF | | | | | | | |
|---|---|---|---|---|---|---|---|
| D.L.O. DIMS. | | GLASS TYPE 'A' | | GLASS TYPE 'B' | | GLASS TYPE 'C' | |
| D.L.O. WIDTH | D.L.O. LENGTH | EXT. (+) | INT. (–) | EXT. (+) | INT. (–) | EXT. (+) | INT. (–) |
| 18" | 30–1/2" | 75.0 | 75.0 | 75.0 | 75.0 | 75.0 | 75.0 |
| 21" | | 75.0 | 75.0 | 75.0 | 75.0 | 75.0 | 75.0 |
| 23–3/4" | | 75.0 | 75.0 | 75.0 | 75.0 | 75.0 | 75.0 |
| 27" | | 75.0 | 75.0 | 75.0 | 75.0 | 75.0 | 75.0 |
| 30–1/2" | | 75.0 | 75.0 | 75.0 | 75.0 | 75.0 | 75.0 |
| 36" | | 66.7 | 66.7 | 75.0 | 75.0 | 75.0 | 75.0 |
| 42" | | 57.6 | 57.6 | 75.0 | 75.0 | 75.0 | 75.0 |
| 48" | | 51.1 | 51.1 | 75.0 | 75.0 | 75.0 | 75.0 |
| 51" | | 48.4 | 48.4 | 75.0 | 75.0 | 75.0 | 75.0 |
| 18" | 38–1/2" | 75.0 | 75.0 | 75.0 | 75.0 | 75.0 | 75.0 |
| 21" | | 75.0 | 75.0 | 75.0 | 75.0 | 75.0 | 75.0 |
| 23–3/4" | | 75.0 | 75.0 | 75.0 | 75.0 | 75.0 | 75.0 |
| 27" | | 70.8 | 70.8 | 75.0 | 75.0 | 75.0 | 75.0 |
| 30–1/2" | | 62.8 | 62.8 | 75.0 | 75.0 | 75.0 | 75.0 |
| 36" | | 54.4 | 54.4 | 75.0 | 75.0 | 75.0 | 75.0 |
| 42" | | 57.9 | 57.9 | 75.0 | 75.0 | 75.0 | 75.0 |
| 48" | | 51.8 | 51.8 | 75.0 | 75.0 | 75.0 | 75.0 |
| 51" | | 49.4 | 49.4 | 75.0 | 75.0 | 75.0 | 75.0 |
| 18" | 42" | 75.0 | 75.0 | 75.0 | 75.0 | 75.0 | 75.0 |
| 21" | | 75.0 | 75.0 | 75.0 | 75.0 | 75.0 | 75.0 |
| 23–3/4" | | 75.0 | 75.0 | 75.0 | 75.0 | 75.0 | 75.0 |
| 27" | | 65.2 | 65.2 | 75.0 | 75.0 | 75.0 | 75.0 |
| 30–1/2" | | 57.6 | 57.6 | 75.0 | 75.0 | 75.0 | 75.0 |
| 36" | | 50.5 | 50.5 | 75.0 | 75.0 | 75.0 | 75.0 |
| 42" | | 54.2 | 54.2 | 75.0 | 75.0 | 75.0 | 75.0 |
| 48" | | 48.9 | 48.9 | 75.0 | 75.0 | 75.0 | 75.0 |
| 51" | | 46.3 | 46.3 | 75.0 | 75.0 | 75.0 | 75.0 |
| 18" | 48" | 75.0 | 75.0 | 75.0 | 75.0 | 75.0 | 75.0 |
| 21" | | 75.0 | 75.0 | 75.0 | 75.0 | 75.0 | 75.0 |
| 23–3/4" | | 66.9 | 66.9 | 75.0 | 75.0 | 75.0 | 75.0 |
| 27" | | 57.4 | 57.4 | 75.0 | 75.0 | 75.0 | 75.0 |
| 30–1/2" | | 51.1 | 51.1 | 75.0 | 75.0 | 75.0 | 75.0 |
| 36" | | 45.2 | 45.2 | 75.0 | 75.0 | 75.0 | 75.0 |
| 42" | | 48.9 | 48.9 | 75.0 | 75.0 | 75.0 | 75.0 |
| 48" | | 44.9 | 44.9 | 75.0 | 75.0 | 75.0 | 75.0 |
| 51" | | 42.7 | 42.7 | 75.0 | 75.0 | 75.0 | 75.0 |
| 18" | 54" | 75.0 | 75.0 | 75.0 | 75.0 | 75.0 | 75.0 |
| 21" | | 75.0 | 75.0 | 75.0 | 75.0 | 75.0 | 75.0 |
| 23–3/4" | | 60.6 | 60.6 | 75.0 | 75.0 | 75.0 | 75.0 |
| 27" | | 51.5 | 51.5 | 75.0 | 75.0 | 75.0 | 75.0 |
| 30–1/2" | | 45.9 | 45.9 | 75.0 | 75.0 | 75.0 | 75.0 |
| 36" | | 40.1 | 40.1 | 75.0 | 75.0 | 75.0 | 75.0 |
| 42" | | 44.1 | 44.1 | 75.0 | 75.0 | 75.0 | 75.0 |
| 18" | 60" | 75.0 | 75.0 | 75.0 | 75.0 | 75.0 | 75.0 |
| 21" | | 69.6 | 69.6 | 75.0 | 75.0 | 75.0 | 75.0 |
| 23–3/4" | | 58.6 | 58.6 | 75.0 | 75.0 | 75.0 | 75.0 |
| 27" | | 47.2 | 47.2 | 75.0 | 75.0 | 75.0 | 75.0 |
| 30–1/2" | | 41.4 | 41.4 | 75.0 | 75.0 | 75.0 | 75.0 |
| 36" | | 36.2 | 36.2 | 72.4 | 72.4 | 75.0 | 75.0 |
| 18" | 65–1/2" | 75.0 | 75.0 | 75.0 | 75.0 | 75.0 | 75.0 |
| 21" | | 69.3 | 69.3 | 75.0 | 75.0 | 75.0 | 75.0 |
| 23–3/4" | | 54.7 | 54.7 | 75.0 | 75.0 | 75.0 | 75.0 |
| 27" | | 43.9 | 43.9 | 75.0 | 75.0 | 75.0 | 75.0 |
| 30–1/2" | | 37.9 | 37.9 | 75.0 | 75.0 | 75.0 | 75.0 |
| 36" | | 32.9 | 32.9 | 65.8 | 65.8 | 75.0 | 75.0 |

| GLASS DESIGN LOAD CAPACITY – PSF | | | | | | | |
|---|---|---|---|---|---|---|---|
| D.L.O. DIMS. | | GLASS TYPE 'A' | | GLASS TYPE 'B' | | GLASS TYPE 'C' | |
| D.L.O. WIDTH | D.L.O. LENGTH | EXT. (+) | INT. (–) | EXT. (+) | INT. (–) | EXT. (+) | INT. (–) |
| 18" | 70–1/2" | 75.0 | 75.0 | 75.0 | 75.0 | 75.0 | 75.0 |
| 21" | | 65.5 | 65.5 | 75.0 | 75.0 | 75.0 | 75.0 |
| 23–3/4" | | 51.3 | 51.3 | 75.0 | 75.0 | 75.0 | 75.0 |
| 27" | | 42.5 | 42.5 | 75.0 | 75.0 | 75.0 | 75.0 |
| 30–1/2" | | 35.5 | 35.5 | 70.9 | 70.9 | 75.0 | 75.0 |
| 18" | 72" | 75.0 | 75.0 | 75.0 | 75.0 | 75.0 | 75.0 |
| 21" | | 64.3 | 64.3 | 75.0 | 75.0 | 75.0 | 75.0 |
| 23–3/4" | | 52.6 | 52.6 | 75.0 | 75.0 | 75.0 | 75.0 |
| 27" | | 41.7 | 41.7 | 75.0 | 75.0 | 75.0 | 75.0 |
| 30–1/2" | | 34.8 | 34.8 | 69.6 | 69.6 | 75.0 | 75.0 |
| 18" | 78" | 75.0 | 75.0 | 75.0 | 75.0 | 75.0 | 75.0 |
| 21" | | 64.4 | 64.4 | 75.0 | 75.0 | 75.0 | 75.0 |
| 23–3/4" | | 50.0 | 50.0 | 75.0 | 75.0 | 75.0 | 75.0 |
| 27" | | 39.0 | 39.0 | 75.0 | 75.0 | 75.0 | 75.0 |
| 30–1/2" | | 32.6 | 32.6 | 65.2 | 65.2 | 75.0 | 75.0 |
| 18" | 80–1/2" | 75.0 | 75.0 | 75.0 | 75.0 | 75.0 | 75.0 |
| 21" | | 62.7 | 62.7 | 75.0 | 75.0 | 75.0 | 75.0 |
| 23–3/4" | | 49.0 | 49.0 | 75.0 | 75.0 | 75.0 | 75.0 |
| 27" | | 38.0 | 38.0 | 75.0 | 75.0 | 75.0 | 75.0 |
| 30–1/2" | | 31.7 | 31.7 | 63.4 | 63.4 | 75.0 | 75.0 |

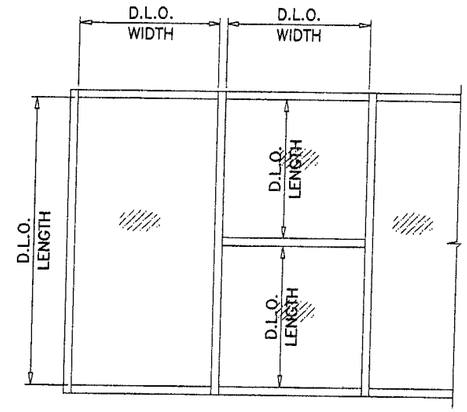


**PRODUCT REVISED**
**as complying with the Florida Building Code**
**Acceptance No** 03-0923.04
**Expiration Date** NOV 21 2007
**By** Ishaq I. Chanda
**Miami Dade Product Control Division**

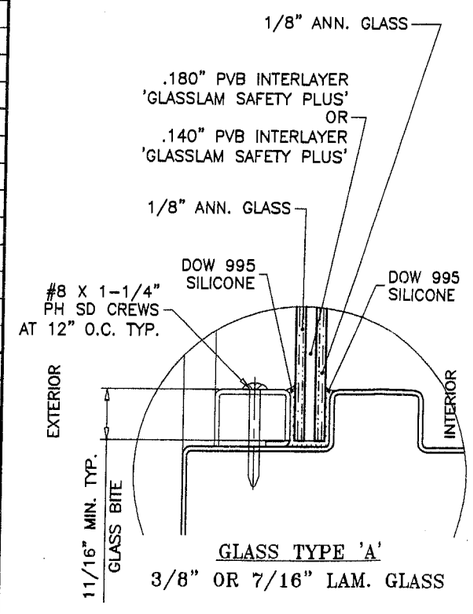


GLASS TYPE 'A'
3/8" OR 7/16" LAM. GLASS

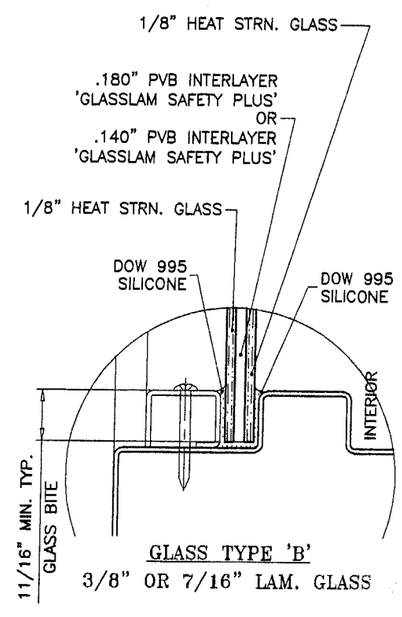


GLASS TYPE 'B'
3/8" OR 7/16" LAM. GLASS

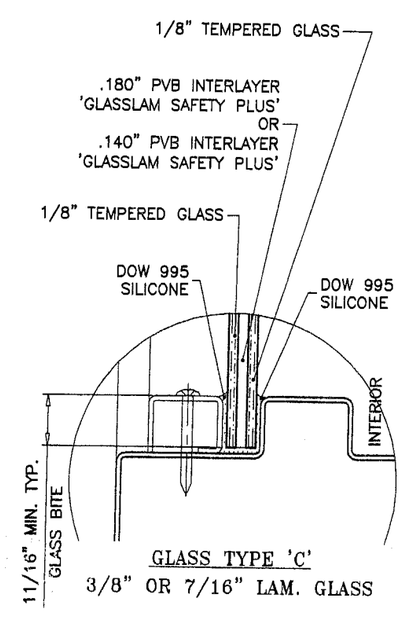


GLASS TYPE 'C'
3/8" OR 7/16" LAM. GLASS

VALUES SHOWN ABOVE ARE MAXIMUM DAYLITE OPENING DIMS. FOR GLASS.

CONSULT WITH CHARTS AT SHEET 2 FOR MULLION CAPACITY.

Engr: DR. HUMAYOUN FAROOQ
STRUCTURES
FLA. PE # 16557

NOV 12 2003


AL-FAROOQ CORPORATION
ENGINEERS, PLANNERS & PRODUCT DESIGN
1235 SW 87 AVE
MIAMI, FLORIDA 33174
TEL. (305) 264-8100 FAX. (305) 262-6978
STORE\W02-47FDC


SERIES 1210 STEEL STOREFRONT SYS. (L.M.)


FIREDOOR CORPORATION
1350 N.W. 74TH STREET
MIAMI, FL. 33147
FIREDOOR TEL.(305) 691-1500 FAX(305) 836-4797


| revisions: | | | |
|---|---|---|---|
| no | date | by | description |
| A | 10.01.02 | | REV. PER BCCO COMMENTS |
| C | 08.02.03 | | NO CHANGE THIS SHEET |

date: 05-13-02
scale: 1/2"=1'-0"
dr. by: HAMID
chk. by:

drawing no. W02-47

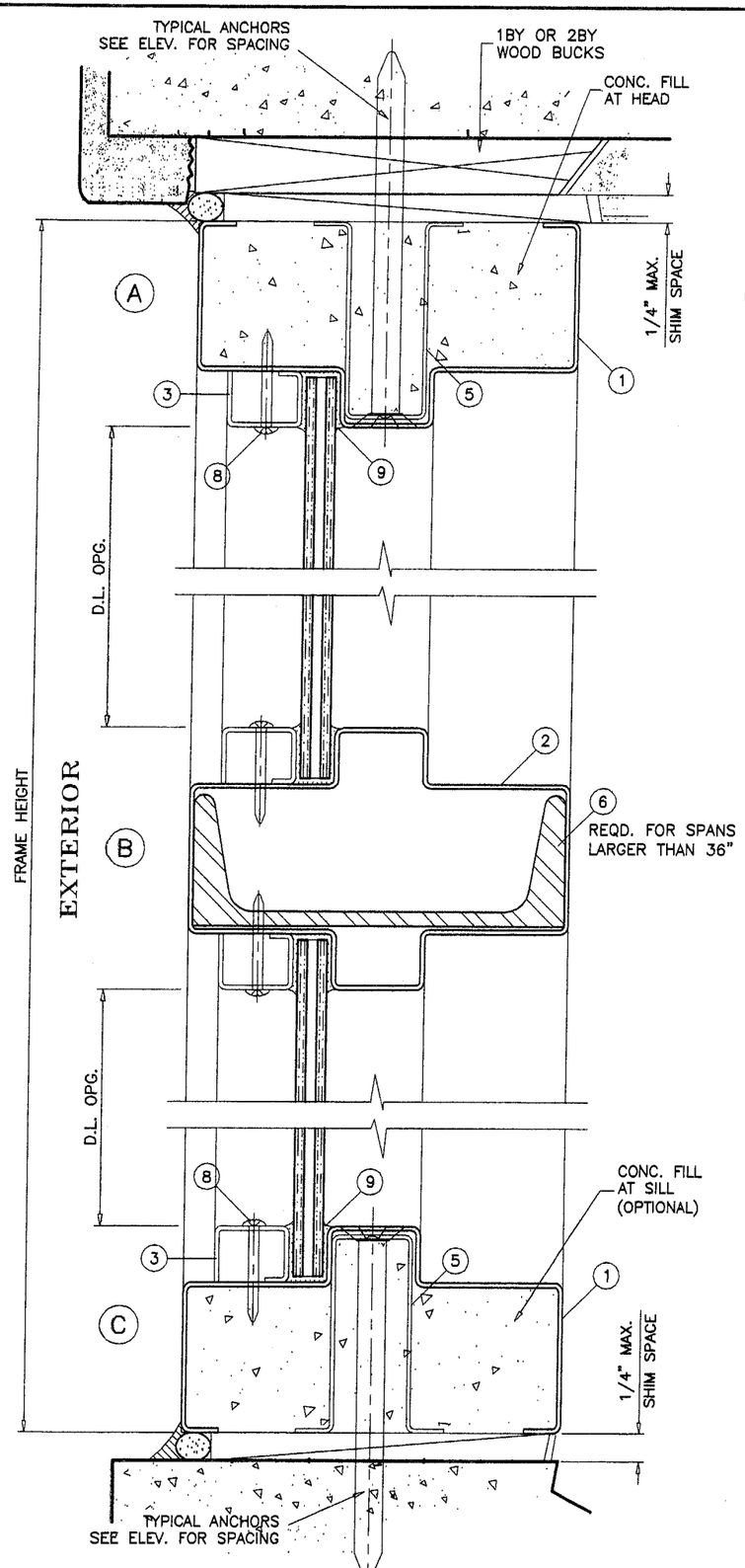


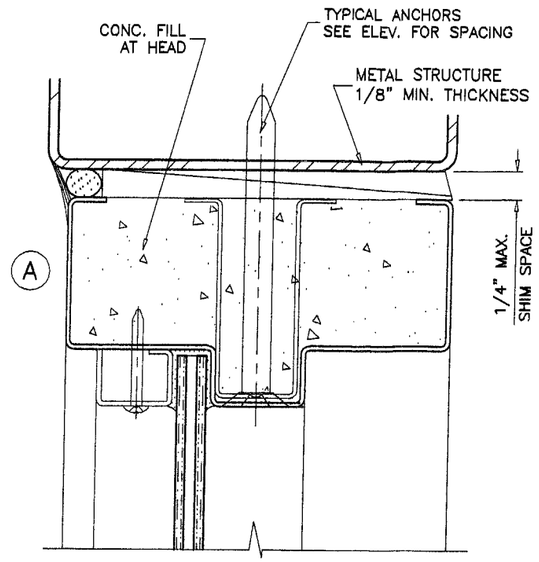


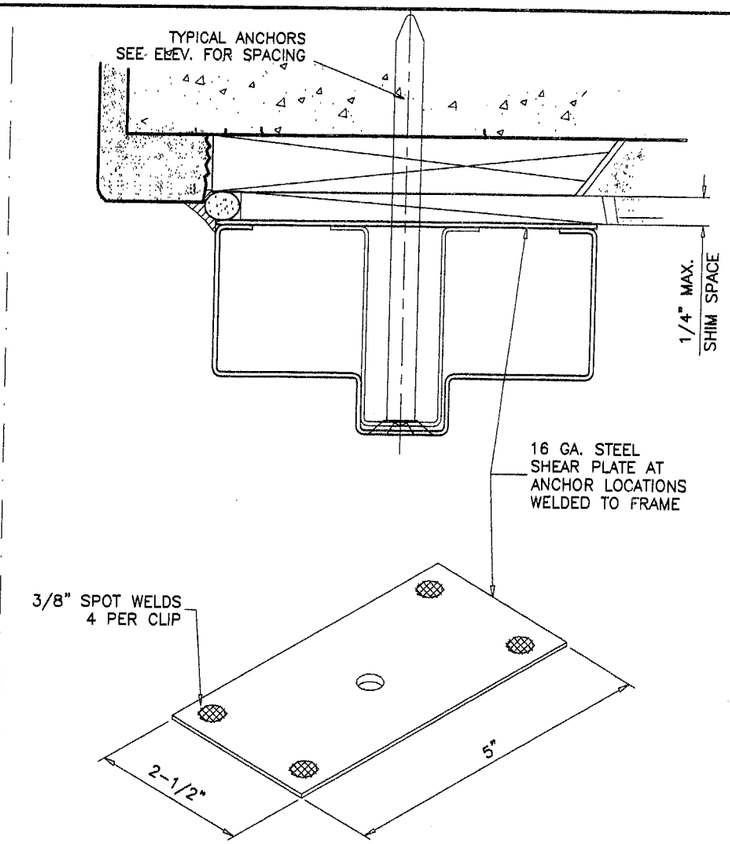


OPTIONAL ANCHOR DETAILS USING SHEAR CLIP
IN LIEU OF FILLED CONCRETE.
(HEAD APPLICATION ONLY)

## TYPICAL ANCHORS @ HEAD/JAMB: SEE ELEV. FOR SPACING

A) **3/8" DIA. RAWL TAPPER**

THRU 1BY WOOD BUCKS INTO MASONRY
2-1/4" MIN. EMBED INTO MASONRY

THRU 2BY WOOD BUCKS INTO MASONRY
1-1/2" MIN. EMBED INTO MASONRY

DIRECTLY INTO CONC.
1-3/4" MIN. EMBED INTO CONCRETE

INTO BLOCK
1-1/4" MIN. EMBED INTO MASONRY

B) **3/8" DIA. SLEEVE ANCHOR HILTI**

THRU 1BY WOOD BUCKS INTO MASONRY
2-1/4" MIN. EMBED INTO MASONRY

THRU 2BY WOOD BUCKS INTO MASONRY
1-1/2" MIN. EMBED INTO MASONRY

DIRECTLY INTO CONC.
1-3/4" MIN. EMBED INTO CONCRETE

C) **3/8" SMS OR MACHINE BOLTS (MIN. GRADE 2 CRS)**

INTO METAL STRUCTURES
(STEEL OR ALUMINUM 1/8" MIN. THICK.)

STEEL : Fy = 36 KSI MIN.
ALUMINUM : 6063-T5 MIN.

**TYPICAL EDGE DISTANCE**

INTO CONC. AND MASONRY = 3-1/2" MIN.
INTO WOOD STRUCTURE = 1" MIN.

WOOD BUCKS AND METAL STRUCTURES NOT BY FIREDOOR MUST SUPPORT LOADS IMPOSED BY GLAZING SYSTEM AND TRANSFER THEM TO THE BUILDING STRUCTURE.

**PRODUCT REVISED**
**as complying with the Florida Building Code**
**Acceptance No.** 03-0923.04
**Expiration Date** NOV 21, 2007
**By** Ishaq I. Chanda
**Miami Dade Product Control Division**

NOTE:
HEAD & SILL ANCHORED TO CONCRETE.
JAMBS CAN BE ANCHORED TO MASONRY BLOCKS.

Engr: DR. HUMAYOUN FAROOQ
STRUCTURES
FLA. PE # 16557

NOV 1 2 2003


AL-FAROOQ CORPORATION
ENGINEERS, PLANNERS & PRODUCT DESIGN
1235 SW 87 AVE
MIAMI, FLORIDA 33174
TEL. (305) 264-8100 FAX. (305) 262-6978
STORE\W02-47FDC


SERIES 1210 STEEL STOREFRONT SYS. (L.M.)


FIREDOOR CORPORATION
1350 N.W. 74TH STREET
MIAMI, FL. 33147
FIREDOOR TEL(305) 691-1500 FAX(305) 836-4797


revisions:

| no | date | by | description |
|---|---|---|---|
| A | 10.01.02 | | REV. PER BCCO COMMENTS |
| C | 08.02.03 | | NO CHANGE THIS SHEET |

date: 05-13-02
scale: 1/2" = 1"
dr. by: HAMID
chk. by:

drawing no.
W02-47

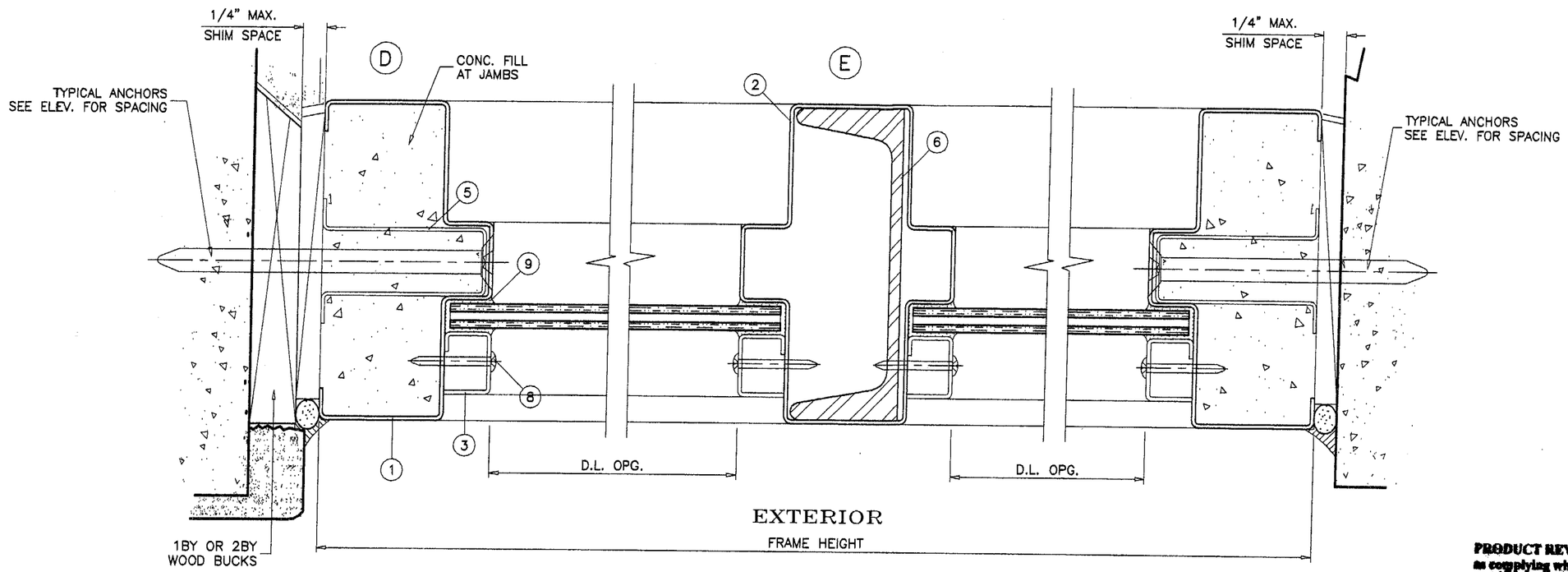


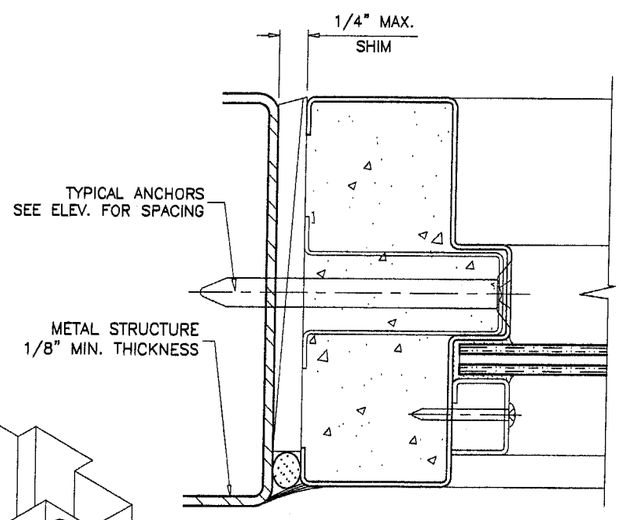


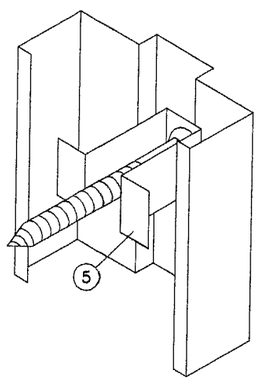


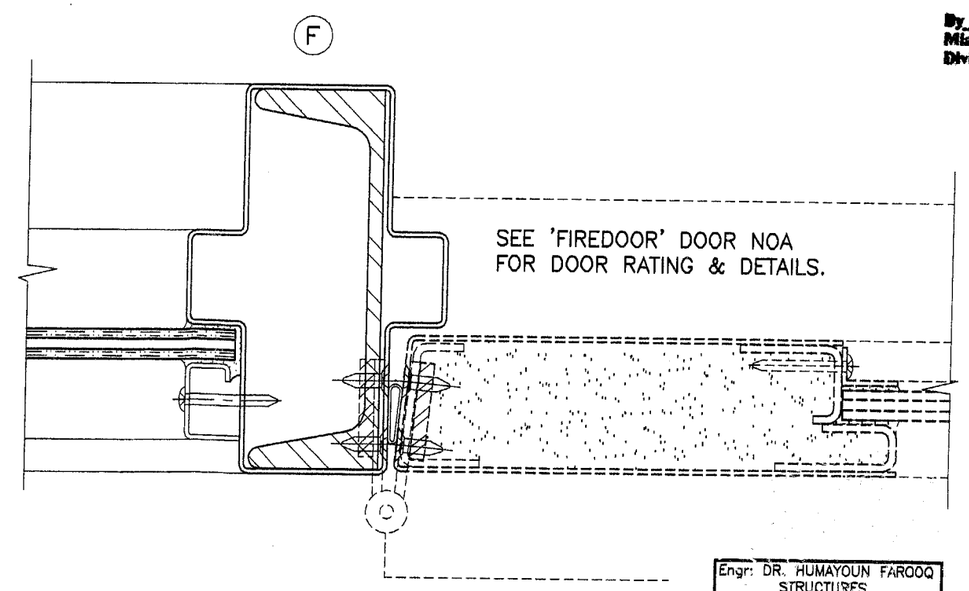


**PRODUCT REVISED**
**as complying with the Florida Building Code**
**Acceptance No** 03-0923.04
**Expiration Date** Nov 21, 2007
**By** Ishoo L. Chanda
**Miami Dade Product Control Division**

Engr: DR. HUMAYOUN FAROOQ
STRUCTURES
FLA. PE # 16557

NOV 1 2 2003

SERIES 1210 STEEL STOREFRONT SYS. (L.M.)

**FIREDOOR CORPORATION**
1350 N.W. 74TH STREET
MIAMI, FL. 33147
TEL.(305) 691-1500 FAX(305) 836-4797
FIREDOOR

**AL-FAROOQ CORPORATION**
ENGINEERS, PLANNERS & PRODUCT DESIGN
1235 SW 87 AVE
MIAMI, FLORIDA 33174
TEL. (305) 264-8100 FAX. (305) 262-6978
STORE\W02-47FDC

revisions:

| no | date | by | description |
|---|---|---|---|
| A | 10.01.02 | | REV. PER BCCO COMMENTS |
| C | 08.02.03 | | NO CHANGE THIS SHEET |

date: 05-13-02
scale: 1/2" = 1"
dr. by: HAMID
chk. by:

drawing no.
W02-47

sheet 5 of 6

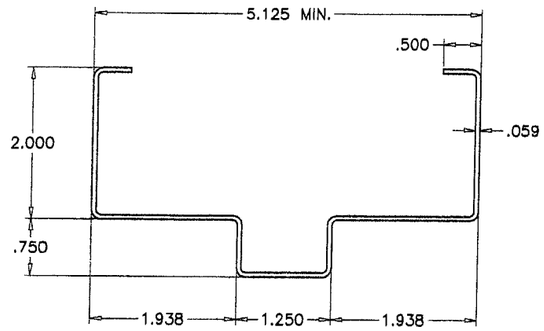


FRAME HEAD/JAMB/SILL

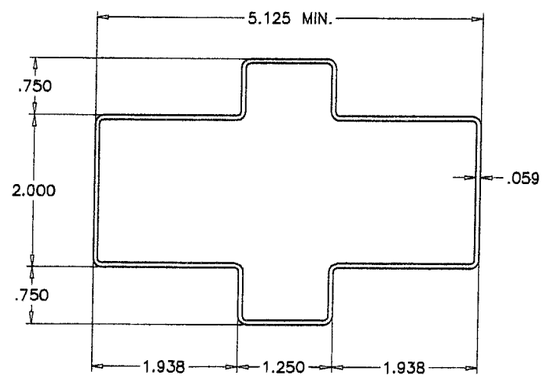


FRAME HORIZONTAL/VERTICAL

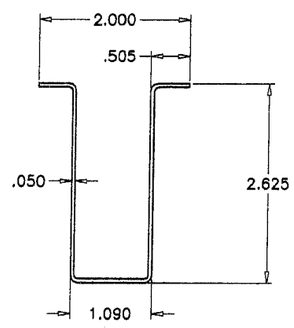


ANCHOR SPACER

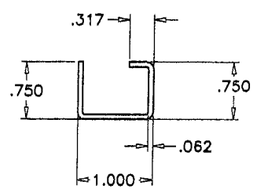


GLAZING STOP

| ITEM NO. | PART # | QUANTITY | DESCRIPTION | MATERIAL | MANF./SUPPLIER/REMARKS |
|---|---|---|---|---|---|
| 1 | – | AS REQD. | FRAME HEAD/SILL/JAMB | STEEL | 16 GA. FORMED (.058") MIN. Fy = 41,000 |
| 2 | – | AS REQD. | FRAME MULLION/HORIZONTAL | STEEL | 16 GA. FORMED (.058") MIN. Fy = 45,000 |
| 3 | – | AS REQD. | GLAZING STOP | STEEL | 16 GA. FORMED |
| 5 | – | 1/ ANCHOR | ANCHOR SPACER | STEEL | 18 GA. |
| 6 | C5 X 6.7 | AS REQD. | REINFORCING CHANNEL | STEEL | 1-3/4" X 5" |
| 8 | #8X1-1/4" | AS REQD. | GLAZING STOP SCREWS | -- | AT 3" FROM ENDS & 12" O.C. |
| 9 | DOW 995 | AS REQD. | GLAZING COMPOUND | SILICONE | – |

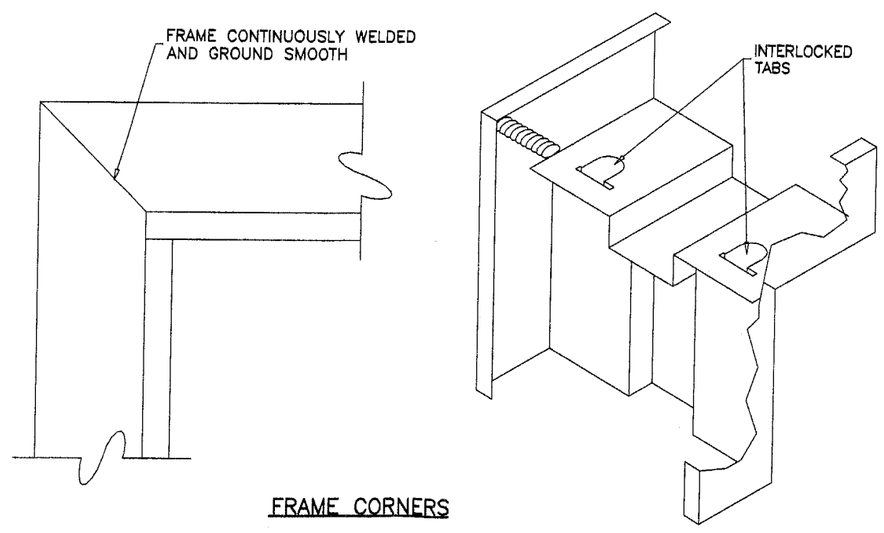


FRAME CORNERS

**PRODUCT REVISED**
**in complying with the Florida Building Code**
**Acceptance No** 03-0923.04
**Expiration Date** NOV 21, 2007
**By** Ishaq I. Chanda
**Miami Dade Product Control Division**

Engr: DR. HUMAYOUN FAROOQ
STRUCTURES
FLA. PE # 16557

NOV 12 2003

AL-FAROOQ CORPORATION
ENGINEERS, PLANNERS & PRODUCT DESIGN
1235 SW 87 AVE
MIAMI, FLORIDA 33174
TEL. (305) 264-8100 FAX. (305) 262-6978
STORE\W02-47FDC

SERIES 1210 STEEL STOREFRONT SYS. (L.M.)

FIREDOOR CORPORATION
1350 N.W. 74TH STREET
MIAMI, FL. 33147
TEL(305) 691-1500 FAX(305) 836-4797

revisions:

| no | date | by | description |
|---|---|---|---|
| A | 10.01.02 | | REV. PER BCCO COMMENTS |
| C | 08.02.03 | | NO CHANGE THIS SHEET |

date: 05-13-02
scale: 1/2" = 1"
dr. by: HAMID
chk. by:

drawing no.
W02-47

sheet 6 of 6