MIAMI-DADE

BUILDING CODE COMPLIANCE OFFICE (BCCO)
PRODUCT CONTROL DIVISION

MIAMI-DADE COUNTY, FLORIDA
METRO-DADE FLAGLER BUILDING
140 WEST FLAGLER STREET, SUITE 1603
MIAMI, FLORIDA 33130-1563
(305) 375-2901 FAX (305) 375-2908

NOTICE OF ACCEPTANCE (NOA)

T.M. Window & Door Co.
601 N.W. 12th Ave.
Pompano Beach, FL 33069

SCOPE:
This NOA is being issued under the applicable rules and regulations governing the use of construction materials. The documentation submitted has been reviewed by Miami-Dade County Product Control Division and accepted by the Board of Rules and Appeals (BORA) to be used in Miami Dade County and other areas where allowed by the Authority Having Jurisdiction (AHJ).

This NOA shall not be valid after the expiration date stated below. The Miami-Dade County Product Control Division (In Miami Dade County) and/or the AHJ (in areas other than Miami Dade County) reserve the right to have this product or material tested for quality assurance purposes. If this product or material fails to perform in the accepted manner, the manufacturer will incur the expense of such testing and the AHJ may immediately revoke, modify, or suspend the use of such product or material within their jurisdiction. BORA reserves the right to revoke this acceptance, if it is determined by Miami-Dade County Product Control Division that this product or material fails to meet the requirements of the applicable building code.

This product is approved as described herein, and has been designed to comply with the Florida Building Code , including High Velocity Hurricane Zone of the Florida Building Code.

DESCRIPTION: Series 338 Aluminum Fixed Window-Impact

APPROVAL DOCUMENT: Drawing No. **W03-52,** titled "Series-338 Aluminum Fixed Window (Impact.)", sheets 1 through 4 of 4, prepared by Al Farooq Corporation, dated 07/11/03 last revised on 12-05-03, signed and sealed by Dr. Humayoun Farooq, P.E., bearing the Miami-Dade County Product Control Approval stamp with the Notice of Acceptance number and approval date by the Miami-Dade County Product Control Division.

MISSILE IMPACT RATING: Large Missile Impact Resistant

LABELING: Each unit shall bear a permanent label with the manufacturer's name or logo, city, state and following statement: "Miami-Dade County Product Control Approved", unless otherwise noted herein.

RENEWAL of this NOA shall be considered after a renewal application has been filed and there has been no change in the applicable building code negatively affecting the performance of this product.

TERMINATION of this NOA will occur after the expiration date or if there has been a revision or change in the materials, use, and/or manufacture of the product or process. Misuse of this NOA as an endorsement of any product, for sales, advertising or any other purposes shall automatically terminate this NOA. Failure to comply with any section of this NOA shall be cause for termination and removal of NOA.

ADVERTISEMENT: The NOA number preceded by the words Miami-Dade County, Florida, and followed by the expiration date may be displayed in advertising literature. If any portion of the NOA is displayed, then it shall be done in its entirety.

INSPECTION: A copy of this entire NOA shall be provided to the user by the manufacturer or its distributors and shall be available for inspection at the job site at the request of the Building Official.
This NOA consists of this page 1 and evidence page as well as approval document mentioned above.
The submitted documentation was reviewed by **Ishaq I. Chanda, P.E.**

PRODUCT CONTROL ACCEPTED

12/19/03

T.M. Window & Door Co.

NOTICE OF ACCEPTANCE: EVIDENCE SUBMITTED

A. DRAWINGS

1. Manufacturer's die drawings and sections.
2. Drawing No. **W03-52,** titled "Series-338 Aluminum Fixed Window (Impact.)", sheets 1 through 4 of 4, prepared by Al Farooq Corporation, dated 07/11/03 last revised on 12-05-03, signed and sealed by Dr. Humayoun Farooq, P.E.

B. TESTS

1. Test reports on 1) Air Infiltration Test, per PA /TAS 202-94
   2) Uniform Static Air Pressure Test, Loading per PA /TAS 202-94
   3) Water Resistance Test, per PA / TAS 202-94
   4) Large Missile Impact Test, per PA / TAS 201-94
   5) Cyclic Wind Pressure Loading, per PA / TAS 203-94

   along with marked-up drawings and installation diagram of an aluminum fixed window, prepared by Fenestration Testing Laboratories, Test Report No. **FTL-2782 (FTL00114),** per PA 201, 202, 203-94, **FTL-2784 (FTL00140),** per PA 201 & 203-94 and **FTL-3803 (FTL03072),** Per TAS 201, 202 and 203-94 dated 11/06/01, 11/06/01 and May 22, 2003 respectively, signed and sealed by Luis Figueredo, P. E. and Joseph Chan, P.E.
2. Test reports on 1) Air Infiltration Test, per PA 202-94
   2) Uniform Static Air Pressure Test, Loading per PA 202-94
   3) Water Resistance Test, per PA 202-94
   4) Large Missile Impact Test, per PA 201-94
   5) Cyclic Wind Pressure Loading, per PA 203-94

   along with marked-up drawings and installation diagram of an aluminum fixed window, prepared by American Testing Lab of South Florida, Test Report No. **ATL #0806.02-02,** dated 09/24/02, signed and sealed by William R. Mehner, P.E.

C. CALCULATIONS

1. Anchor, glass and structural analysis, prepared by Al Farooq Corporation, dated 09/12/03 and revised on December 11, 2003, signed and sealed by Dr. Humayoun Farooq, P.E.

D. QUALITY ASSURANCE BY:

1. Miami-Dade County Building Code Compliance Office (BCCO)

E. MATERIAL CERTIFICATIONS

1. Notice of Acceptance **No. 02-1205.03** issued to Security Glass Holding LLC for "SAF-GLAS", expiring on 12/16/07.
2. Notice of Acceptance **No. 03-0916.02** issued to Glasslam NGI, dba Nebula Glass for "Glasslam Safety Plus", expiring on.09-09-2008.
3. Notice of Acceptance **No. 99-0302.04** issued to UCB Chemical Corp for "Uvekol", expiring on.02-08-2004.

F. STATEMENTS

1. Statement letter of conformance and "No financial interest", dated 09/18/03, signed and sealed by Dr. Humayoun Farooq, P.E.
2. Laboratory compliance statements, part of respective test reports.

G. OTHER

1. Test proposal by TM Windows dated May 13, 2003 approved dated 5/16/03 by BCCO.

Ishaq I. Chanda

Ishaq I. Chanda, P.E.
Product Control Examiner
NOA No 03-0925.04
Expiration Date: January 08, 2009
Approval Date: January 08, 2004

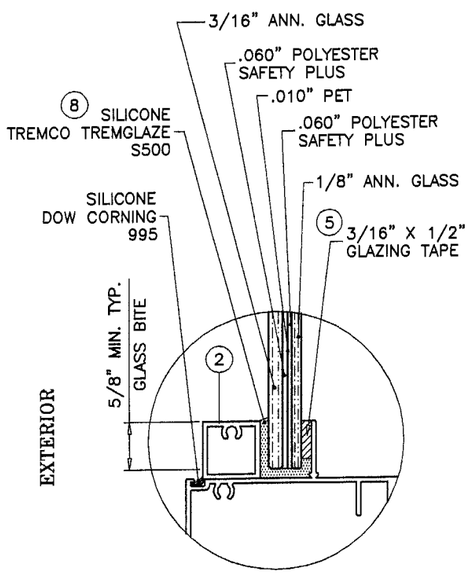

GLASS TYPE 'A'
'GLASSLAM SAFETY PLUS'
BY NEBULA GLASS INTL. INC.

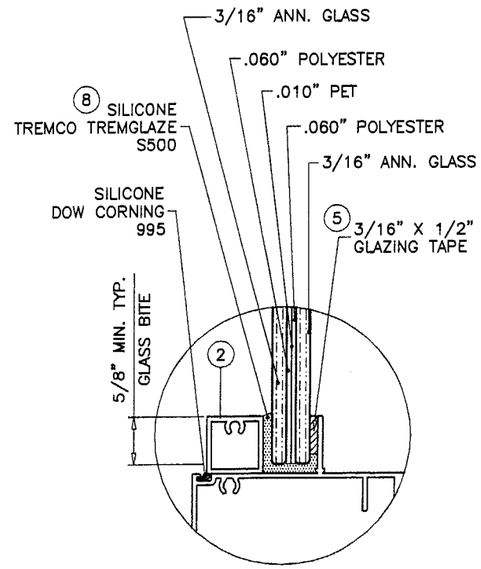

GLASS TYPE 'B'
'GLASSLAM SAFETY PLUS'
BY NEBULA GLASS INTL. INC.

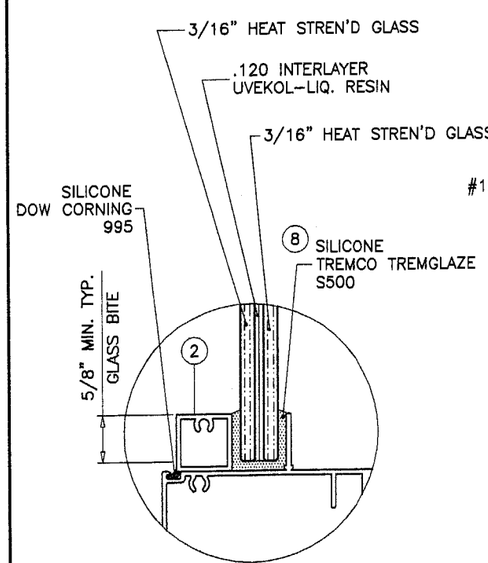

GLASS TYPE 'C'
'UVEKOL'
BY UCB CHEMICAL CORP.

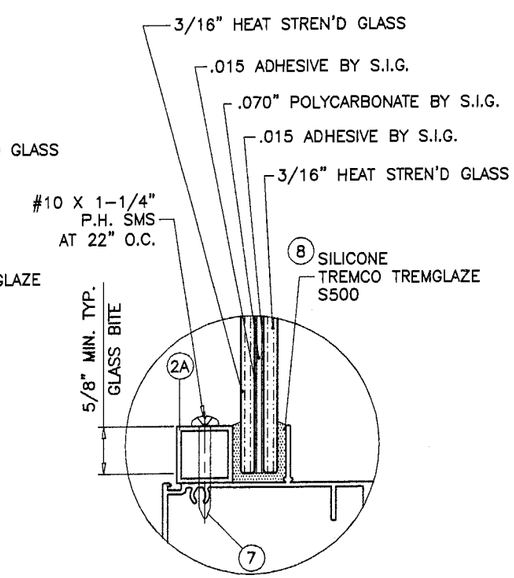

GLASS TYPE 'D'
'SAF-GLAS'
BY SECURITY IMPACT GLASS HOLDING INC.

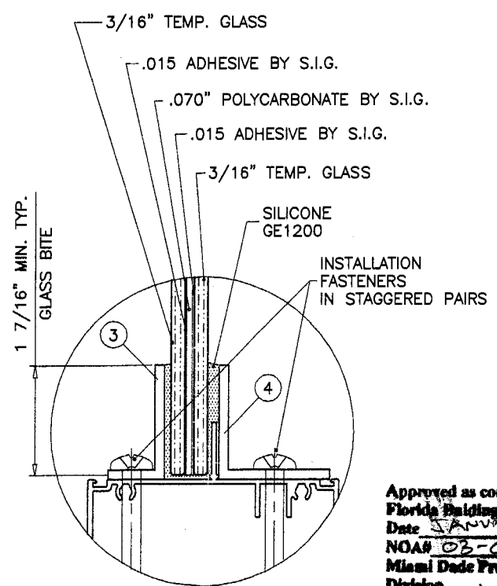

GLASS TYPE 'E'
'SAF-GLAS'
BY SECURITY IMPACT GLASS HOLDING INC.

GLAZING OPTIONS

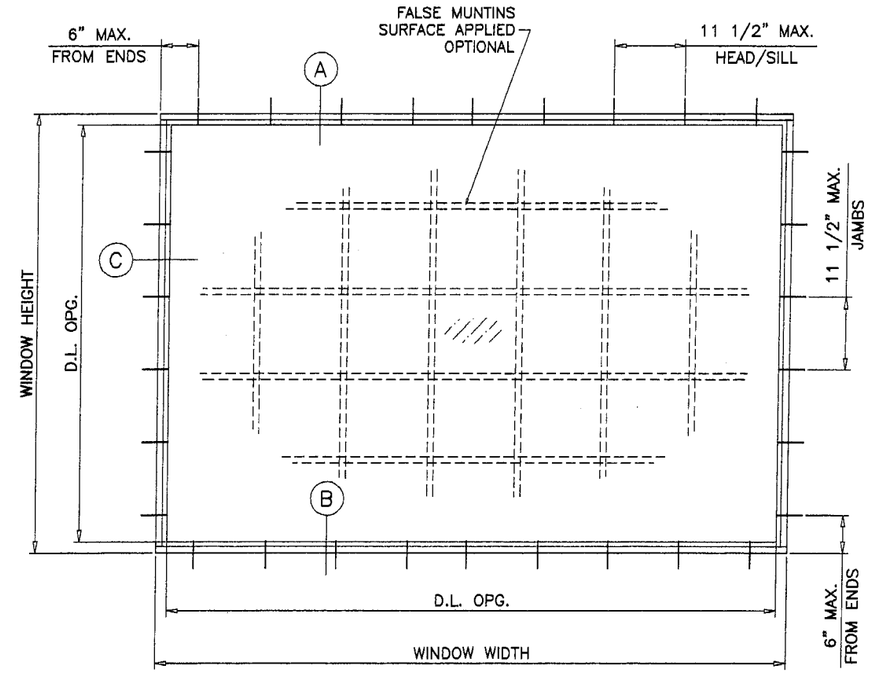

TYPICAL ELEVATION

SERIES 338 ALUMINUM FIXED WINDOW

DESIGN LOAD RATING FOR THESE WINDOWS TO BE AS PER CHARTS SHOWN ON SHEET 2.

THESE WINDOWS ARE RATED FOR LARGE MISSILE IMPACT. SHUTTERS ARE NOT REQUIRED.

APPROVAL APPLIES TO SINGLE UNITS OR SIDE BY SIDE COMBINATIONS OF FIXED/FIXED OR FIXED WITH OTHER WINDOW TYPES IN MODULES OF TWO OR MORE WINDOWS USING APPROVED MULLIONS HOLDING CURRENT NOA.

THIS PRODUCT IS DESIGNED TO COMPLY WITH THE HIGH VELOCITY HURRICANE ZONE OF THE 2001 FLORIDA BUILDING CODE.

WOOD BUCKS BY OTHERS, MUST BE ANCHORED PROPERLY TO TRANSFER LOADS TO THE STRUCTURE AND TO BE REVIEWED BY BLDG. OFFICIAL.

ANCHORS SHALL BE AS LISTED, SPACED AS SHOWN ON DETAILS. ANCHOR EMBEDMENT TO BASE MATERIAL SHALL BE BEYOND WALL DRESSING OR STUCCO.

ANCHORING OR LOADING CONDITIONS NOT SHOWN IN THESE DETAILS ARE NOT PART OF THIS APPROVAL.

Approved as complying with the Florida Building Code
Date JANUARY 08, 2004
NOA# 03-0925.04
Miami Dade Product Control Division
By Shaq I. Lhanda

Engr: DR. HUMAYOUN FAROOQ
STRUCTURES
FLA. PE # 16157
C.A.N. 3538

DEC 11 2003

AL-FAROOQ CORPORATION
ENGINEERS, PLANNERS & PRODUCT DESIGN
1235 SW 87 AVE
MIAMI, FLORIDA 33174
TEL. (305) 264-8100 FAX. (305) 262-6978
COMP-ANL\W03-52TMW

SERIES 338 ALUMINUM FIXED WINDOW (IMPACT)

TM WINDOW AND DOOR
601 N.W. 12TH AVE.
POMPANO BEACH, FL. 33069
TEL. (954) 781-4430 FAX. (954) 781-5078

revisions:

no	date	by	description
A	12.05.03		REV. PER BCCO COMMENTS

date: 07-11-03
scale: 1/2" = 1"
dr. by: HAMID
chk. by:

drawing no.
W03-52

DESIGN LOAD CAPACITY – PSF											
WINDOW DIMS.		GLASS TYPE 'A'		GLASS TYPE 'B'		GLASS TYPE 'C'		GLASS TYPE 'D'		GLASS TYPE 'E'	
WIDTH	LENGTH	EXT. (+)	INT. (–)	EXT. (+)	INT. (–)	EXT. (+)	INT. (–)	EXT. (+)	INT. (–)	EXT. (+)	INT. (–)
36"	48"	62.0	62.0	59.0	59.0	75.0	75.0	90.0	90.0	95.0	95.0
42"		54.6	54.6	59.0	59.0	75.0	75.0	90.0	90.0	95.0	95.0
48"		47.8	47.8	59.0	59.0	75.0	75.0	90.0	90.0	95.0	95.0
54"		47.8	47.8	59.0	59.0	75.0	75.0	90.0	90.0	95.0	95.0
60"		X X	X X	57.9	57.9	75.0	75.0	90.0	90.0	95.0	95.0
66"		X X	X X	54.6	54.6	75.0	75.0	90.0	90.0	95.0	95.0
72"		X X	X X	X X	X X	75.0	75.0	90.0	90.0	95.0	95.0
36"	60"	62.0	62.0	59.0	59.0	75.0	75.0	90.0	90.0	95.0	95.0
42"		52.3	52.3	59.0	59.0	75.0	75.0	90.0	90.0	95.0	95.0
48"		X X	X X	57.9	57.9	75.0	75.0	90.0	90.0	95.0	95.0
54"		X X	X X	X X	X X	75.0	75.0	80.0	80.0	95.0	95.0
60"		X X	X X	X X	X X	72.0	72.0	72.0	72.0	95.0	95.0
66"		X X	X X	X X	X X	72.0	72.0	72.0	72.0	95.0	95.0
72"		X X	X X	X X	X X	72.0	72.0	72.0	72.0	90.3	90.3
36"	72"	52.9	52.9	59.0	59.0	75.0	75.0	90.0	90.0	95.0	95.0
42"		X X	X X	56.0	56.0	75.0	75.0	90.0	90.0	95.0	95.0
48"		X X	X X	X X	X X	75.0	75.0	90.0	90.0	95.0	95.0
54"		X X	X X	X X	X X	75.0	75.0	80.0	80.0	95.0	95.0
60"		X X	X X	X X	X X	72.0	72.0	72.0	72.0	90.3	90.3
66"		X X	X X	X X	X X	X X	X X	X X	X X	82.1	82.1
72"		X X	X X	X X	X X	X X	X X	X X	X X	75.3	75.3
36"	84"	X X	X X	58.9	58.9	75.0	75.0	90.0	90.0	95.0	95.0
42"		X X	X X	X X	X X	75.0	75.0	90.0	90.0	95.0	95.0
48"		X X	X X	X X	X X	75.0	75.0	87.4	87.4	95.0	95.0
54"		X X	X X	X X	X X	75.0	75.0	77.7	77.7	95.0	95.0
60"		X X	X X	X X	X X	X X	X X	X X	X X	92.9	92.9
66"		X X	X X	X X	X X	X X	X X	X X	X X	84.5	84.5
72"		X X	X X	X X	X X	X X	X X	X X	X X	77.4	77.4
36"	96"	X X	X X	X X	X X	75.0	75.0	90.0	90.0	95.0	95.0
42"		X X	X X	X X	X X	75.0	75.0	90.0	90.0	95.0	95.0
48"		X X	X X	X X	X X	75.0	75.0	77.7	77.7	95.0	95.0
54"		X X	X X	X X	X X	X X	X X	X X	X X	95.0	95.0
60"		X X	X X	X X	X X	X X	X X	X X	X X	94.9	94.9
66"		X X	X X	X X	X X	X X	X X	X X	X X	86.2	86.2
72"		X X	X X	X X	X X	X X	X X	X X	X X	79.0	79.0
36"	102"	X X	X X	X X	X X	75.0	75.0	90.0	90.0	95.0	95.0
42"		X X	X X	X X	X X	75.0	75.0	90.0	90.0	95.0	95.0
48"		X X	X X	X X	X X	X X	X X	X X	X X	95.0	95.0
54"		X X	X X	X X	X X	X X	X X	X X	X X	95.0	95.0
60"		X X	X X	X X	X X	X X	X X	X X	X X	89.3	89.3
66"		X X	X X	X X	X X	X X	X X	X X	X X	81.2	81.2
36"	108"	X X	X X	X X	X X	75.0	75.0	90.0	90.0	95.0	95.0
42"		X X	X X	X X	X X	75.0	75.0	89.7	89.7	95.0	95.0
48"		X X	X X	X X	X X	X X	X X	X X	X X	95.0	95.0
54"		X X	X X	X X	X X	X X	X X	X X	X X	95.0	95.0
60"		X X	X X	X X	X X	X X	X X	X X	X X	95.0	95.0
66"		X X	X X	X X	X X	X X	X X	X X	X X	86.4	86.4
36"	114"	X X	X X	X X	X X	75.0	75.0	90.0	90.0	95.0	95.0
42"		X X	X X	X X	X X	X X	X X	X X	X X	95.0	95.0
48"		X X	X X	X X	X X	X X	X X	X X	X X	95.0	95.0
54"		X X	X X	X X	X X	X X	X X	X X	X X	95.0	95.0
60"		X X	X X	X X	X X	X X	X X	X X	X X	91.3	91.3
36"	120"	X X	X X	X X	X X	75.0	75.0	90.0	90.0	95.0	95.0
42"		X X	X X	X X	X X	X X	X X	X X	X X	95.0	95.0
48"		X X	X X	X X	X X	X X	X X	X X	X X	95.0	95.0
54"		X X	X X	X X	X X	X X	X X	X X	X X	95.0	95.0
60"		X X	X X	X X	X X	X X	X X	X X	X X	95.0	95.0

DESIGN LOAD CAPACITY – PSF											
WINDOW DIMS.		GLASS TYPE 'A'		GLASS TYPE 'B'		GLASS TYPE 'C'		GLASS TYPE 'D'		GLASS TYPE 'E'	
WIDTH	LENGTH	EXT. (+)	INT. (–)	EXT. (+)	INT. (–)	EXT. (+)	INT. (–)	EXT. (+)	INT. (–)	EXT. (+)	INT. (–)
36"	126"	X X	X X	X X	X X	75.0	75.0	90.0	90.0	95.0	95.0
42"		X X	X X	X X	X X	X X	X X	X X	X X	95.0	95.0
48"		X X	X X	X X	X X	X X	X X	X X	X X	95.0	95.0
54"		X X	X X	X X	X X	X X	X X	X X	X X	95.0	95.0
36"	132"	X X	X X	X X	X X	X X	X X	X X	X X	95.0	95.0
42"		X X	X X	X X	X X	X X	X X	X X	X X	95.0	95.0
48"		X X	X X	X X	X X	X X	X X	X X	X X	95.0	95.0
54"		X X	X X	X X	X X	X X	X X	X X	X X	95.0	95.0
36"	138"	X X	X X	X X	X X	X X	X X	X X	X X	95.0	95.0
42"		X X	X X	X X	X X	X X	X X	X X	X X	95.0	95.0
48"		X X	X X	X X	X X	X X	X X	X X	X X	95.0	95.0
36"	144"	X X	X X	X X	X X	X X	X X	X X	X X	95.0	95.0
42"		X X	X X	X X	X X	X X	X X	X X	X X	95.0	95.0
48"		X X	X X	X X	X X	X X	X X	X X	X X	95.0	95.0

DESIGN LOAD CAPACITY X PSF											
WINDOW DIMS.		GLASS TYPE 'A'		GLASS TYPE 'B'		GLASS TYPE 'C'		GLASS TYPE 'D'		GLASS TYPE 'E'	
WIDTH	LENGTH	EXT. (+)	INT. (X)	EXT. (+)	INT. (X)	EXT. (+)	INT. (X)	EXT. (+)	INT. (X)	EXT. (+)	INT. (X)
19–1/8"	26"	62.0	62.0	59.0	59.0	75.0	75.0	90.0	90.0	95.0	95.0
26–1/2"		62.0	62.0	59.0	59.0	75.0	75.0	90.0	90.0	95.0	95.0
37"		62.0	62.0	59.0	59.0	75.0	75.0	90.0	90.0	95.0	95.0
53–1/8"		62.0	62.0	59.0	59.0	75.0	75.0	90.0	90.0	95.0	95.0
19–1/8"	38–3/8"	62.0	62.0	59.0	59.0	75.0	75.0	90.0	90.0	95.0	95.0
26–1/2"		62.0	62.0	59.0	59.0	75.0	75.0	90.0	90.0	95.0	95.0
37"		62.0	62.0	59.0	59.0	75.0	75.0	90.0	90.0	95.0	95.0
53–1/8"		59.8	59.8	59.0	59.0	75.0	75.0	90.0	90.0	95.0	95.0
19–1/8"	50–5/8"	62.0	62.0	59.0	59.0	75.0	75.0	90.0	90.0	95.0	95.0
26–1/2"		62.0	62.0	59.0	59.0	75.0	75.0	90.0	90.0	95.0	95.0
37"		62.0	62.0	59.0	59.0	75.0	75.0	90.0	90.0	95.0	95.0
53–1/8"		45.3	45.3	59.0	59.0	75.0	75.0	85.3	85.3	95.0	95.0
19–1/8"	63"	62.0	62.0	59.0	59.0	75.0	75.0	90.0	90.0	95.0	95.0
26–1/2"		62.0	62.0	59.0	59.0	75.0	75.0	90.0	90.0	95.0	95.0
37"		57.6	57.6	59.0	59.0	75.0	75.0	90.0	90.0	95.0	95.0
53–1/8"		X X	X X	X X	X X	75.0	75.0	81.3	81.3	95.0	95.0
19–1/8"	74–1/4"	62.0	62.0	59.0	59.0	75.0	75.0	90.0	90.0	95.0	95.0
26–1/2"		62.0	62.0	59.0	59.0	75.0	75.0	90.0	90.0	95.0	95.0
37"		X X	X X	59.0	59.0	75.0	75.0	90.0	90.0	95.0	95.0
53–1/8"		X X	X X	X X	X X	75.0	75.0	81.3	81.3	95.0	95.0

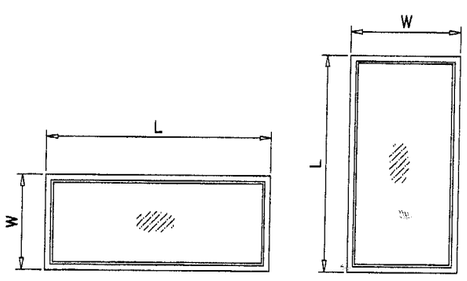

NOTE:
WIDTH AND LENGTH DIMENSIONS CAN BE ORIENTED VERTICALLY OR HORIZONTALLY AS SHOWN ABOVE.

Approved as complying with the Florida Building Code
Date JAN 8, 2004
NOA# 03-0925.04
Miami Dade Product Control Division
By Ishaq I. Lhanda

Engr: DR. HUMAYOUN FAROOQ
STRUCTURES
FLA. PE # 16557
C.A.N. 3538
DEC 11 2003

AL-FAROOQ CORPORATION
ENGINEERS, PLANNERS & PRODUCT DESIGN
1235 SW 87 AVE
MIAMI, FLORIDA 33174
TEL. (305) 264-8100 FAX. (305) 262-6978
COMP-ANL\W03-52TMW

SERIES 338 ALUMINUM FIXED WINDOW (IMPACT)

TM WINDOW AND DOOR
601 N.W. 12TH AVE.
POMPANO BEACH, FL. 33069
TEL. (954) 781-4430 FAX. (954) 781-5078

revisions:

no	date	by	description
A	12.05.03		REV. PER BCCO COMMENTS

date: 07-11-03
scale: 1/2" = 1"
dr. by: HAMID
chk. by:

drawing no.
W03-52

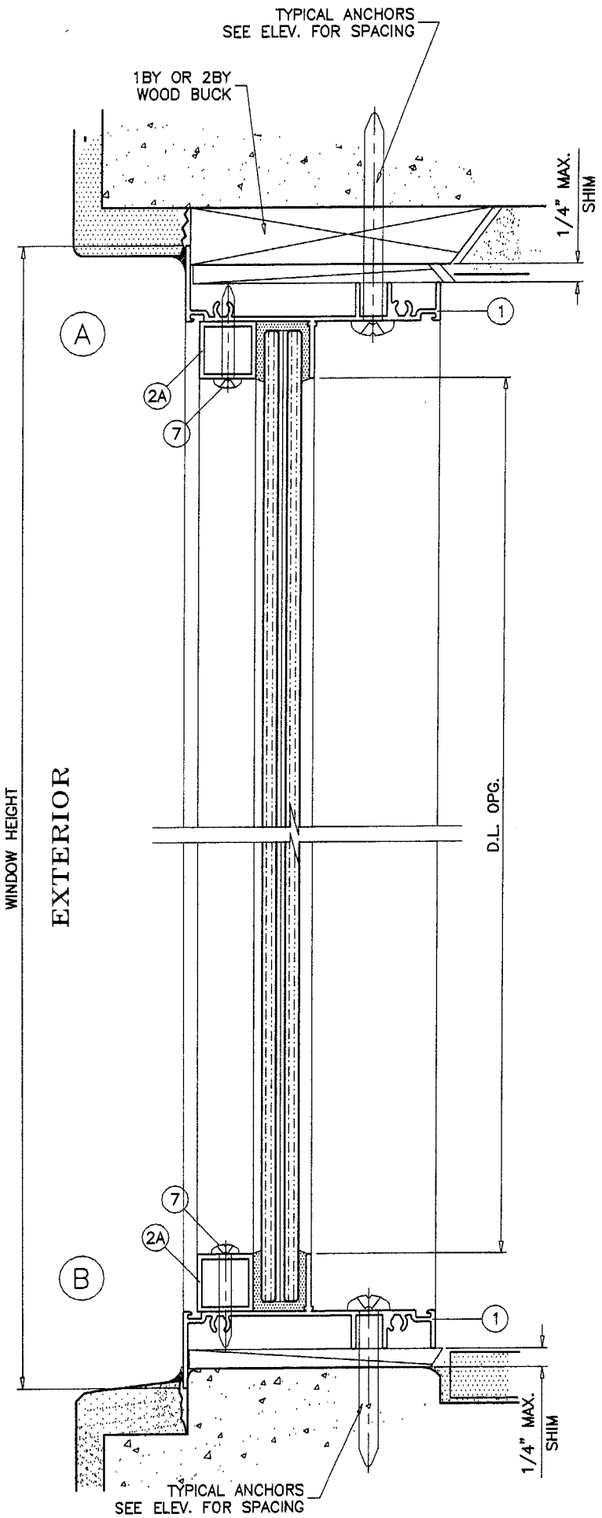

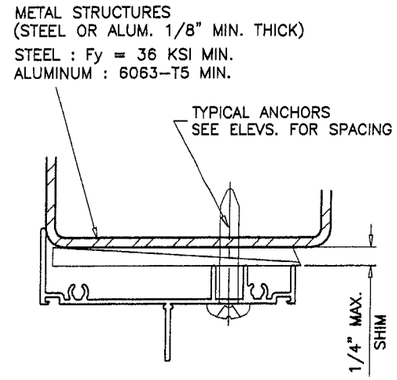

WOOD BUCKS NOT BY TM WINDOWS, MUST SUSTAIN LOADS IMPOSED BY GLAZING SYSTEM AND TRANSFER THEM TO THE BUILDING STRUCTURE.

TYPICAL ANCHORS: SEE ELEV. FOR SPACING

1/4" TAPCONS
INTO WOOD STRUCTURES
1-3/4" MIN. PENETRATION INTO WOOD

THRU WOOD BUCKS INTO MASONRY OR DIRECTLY INTO MASONRY
1-1/4" MIN. EMBED INTO MASONRY

DIRECTLY INTO MASONRY OR CONC.
1-1/4" MIN. EMBED INTO MASONRY OR CONC.

#14 DRILLFLEX OR SELF DRILLING SCREWS (SAE GRADE 5 Fy MIN.=92 KSI)
INTO METAL STRUCTURES (1/8" MIN. THICKNESS)

#14 SMS
INTO APPROVED MULLIONS (NO SHIM SPACE)

SEALANT:

FRAME CORNERS SEALED WITH SILICONE.

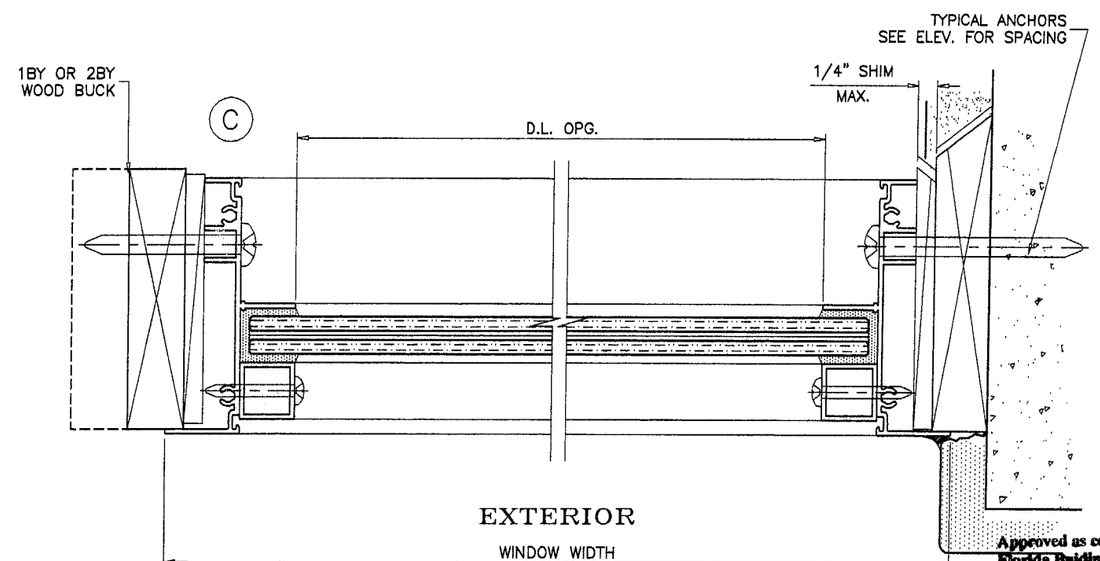

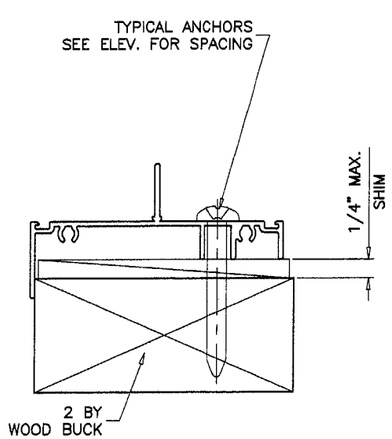

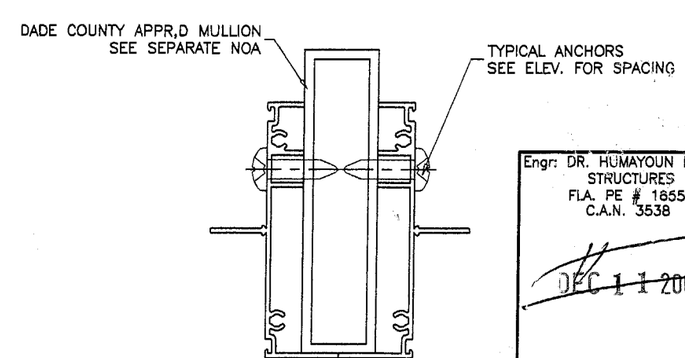

Approved as complying with the Florida Building Code
Date JAN 08, 2004
NOA# 03-0925.04
Miami Dade Product Control Division
By Shaq I. Chanda

Engr: DR. HUMAYOUN FAROOQ
STRUCTURES
FLA. PE # 18557
C.A.N. 3538

DEC 11 2003

AL-FAROOQ CORPORATION
ENGINEERS, PLANNERS & PRODUCT DESIGN
1235 SW 87 AVE
MIAMI, FLORIDA 33174
TEL. (305) 264-8100 FAX. (305) 262-6978
COMP-ANL\W03-52TMW

SERIES 338 ALUMINUM FIXED WINDOW (IMPACT)

TM WINDOW AND DOOR
601 N.W. 12TH AVE.
POMPANO BEACH, FL. 33069
TEL. (954) 781-4430 FAX. (954) 781-5078

revisions:			
no	date	by	description
A	12.05.03		REV. PER BCCO COMMENTS

date: 07-11-03
scale: 1/2" = 1"
dr. by: HAMID
chk. by:

drawing no.
W03-52

sheet 3 of 4

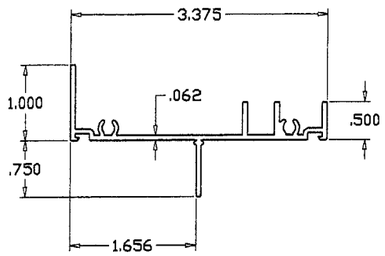

1 WINDOW FRAME

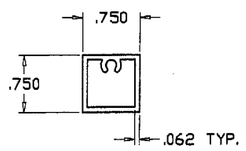

2 GLAZING STOP TUBE

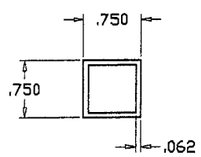

2A GLAZING STOP TUBE

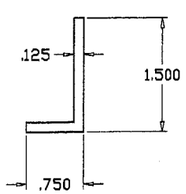

3 GLAZING STOP EXTERIOR ANGLE

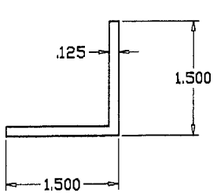

4 GLAZING STOP INTERIOR ANGLE

ITEM	PART #	QUANTITY	DESCRIPTION	MATERIAL	MANF./SUPPLIER/REMARKS
1	GW-35277-A	4	WINDOW FRAME	6063-T6	–
2	1296	AS REQD.	GLAZING STOP TUBE	6063-T5	–
2A	PW-338	AS REQD.	GLAZING STOP TUBE	6063-T5	–
3	BPA-1960	AS REQD.	GLAZING STOP EXTERIOR ANGLE	6063-T5	–
4	BPA-1960	AS REQD.	GLAZING STOP INTERIOR ANGLE	6063-T5	–
5	–	AS REQD.	GLAZING TAPE, FULL LENGTH	–	3/16" X 1/2"
6	#10 X 1"	–	FRAME ASSEMBLY SCREWS	–	P.H. SMS
7	#10 X 1-1/4"	–	GLAZING STOP SCREWS	–	P.H. SMS
8	S500	–	GLAZING COMPOUND	SILICONE	TREMCO TREMGLAZE
8A	GE1200	–	GLAZING COMPOUND	SILICONE	GE

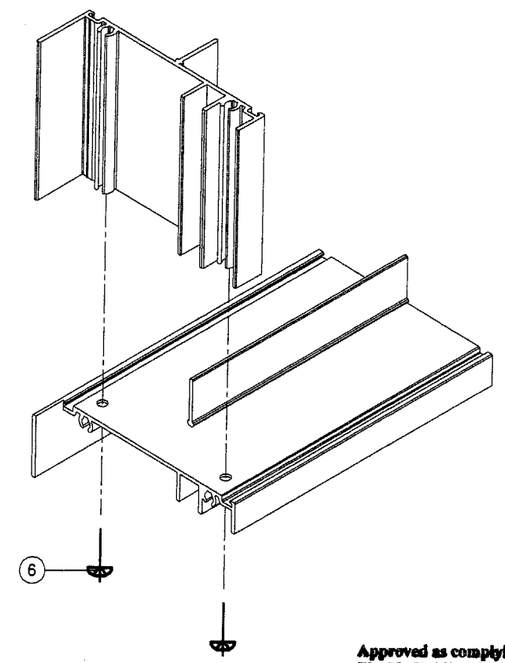

TYP. CORNER DETAIL

Approved as complying with the Florida Building Code
Date: JAN 08, 2004
NOAS 03-0925.04
Miami Dade Product Control Division
By Ishaq I. Chanda

Engr: DR. HUMAYOUN FAROOQ
STRUCTURES
FLA. PE # 16557
C.A.N. 3538

DEC 11 2003

AL-FAROOQ CORPORATION
ENGINEERS, PLANNERS & PRODUCT DESIGN
1235 SW 87 AVE
MIAMI, FLORIDA 33174
TEL. (305) 264-8100 FAX. (305) 262-6978

COMP-ANL\W03-52TMW

SERIES 338 ALUMINUM FIXED WINDOW (IMPACT)

TM WINDOW AND DOOR
601 N.W. 12TH AVE.
POMPANO BEACH, FL. 33069
TEL. (954) 781-4430 FAX. (954) 781-5078

revisions:

no	date	by	description
A	12.05.03		REV. PER BCCO COMMENTS

date: 07-11-03
scale: 1/2" = 1"
dr. by: HAMID
chk. by:

drawing no.
W03-52

sheet 4 of 4