MIAMI-DADE

BUILDING CODE COMPLIANCE OFFICE (BCCO)
PRODUCT CONTROL DIVISION

MIAMI-DADE COUNTY, FLORIDA
METRO-DADE FLAGLER BUILDING
140 WEST FLAGLER STREET, SUITE 1603
MIAMI, FLORIDA 33130-1563
(305) 375-2901 FAX (305) 375-2908

NOTICE OF ACCEPTANCE (NOA)

Air Vent, Inc.
3000 West Commerce Street
Dallas, TX 75212

SCOPE:
This NOA is being issued under the applicable rules and regulations governing the use of construction materials. The documentation submitted has been reviewed by Miami-Dade County Product Control Division and accepted by the Board of Rules and Appeals (BORA) to be used in Miami Dade County and other areas where allowed by the Authority Having Jurisdiction (AHJ).
This NOA shall not be valid after the expiration date stated below. The Miami-Dade County Product Control Division (In Miami Dade County) and/or the AHJ (in areas other than Miami Dade County) reserve the right to have this product or material tested for quality assurance purposes. If this product or material fails to perform in the accepted manner, the manufacturer will incur the expense of such testing and the AHJ may immediately revoke, modify, or suspend the use of such product or material within their jurisdiction. BORA reserves the right to revoke this acceptance, if it is determined by Miami-Dade County Product Control Division that this product or material fails to meet the requirements of the applicable building code.

This product is approved as described herein, and has been designed to comply with the Florida Building Code, including the High Velocity Hurricane Zone.

DESCRIPTION: Air Vent MultiPitch FilterVent Aluminum Ridge Vent.

LABELING: Each unit shall bear a permanent label with the manufacturer's name or logo, city, state and following statement: "Miami-Dade County Product Control Approved", unless otherwise noted herein.

RENEWAL of this NOA shall be considered after a renewal application has been filed and there has been no change in the applicable building code negatively affecting the performance of this product.

TERMINATION of this NOA will occur after the expiration date or if there has been a revision or change in the materials, use, and/or manufacture of the product or process. Misuse of this NOA as an endorsement of any product, for sales, advertising or any other purposes shall automatically terminate this NOA. Failure to comply with any section of this NOA shall be cause for termination and removal of NOA.

ADVERTISEMENT: The NOA number preceded by the words Miami-Dade County, Florida, and followed by the expiration date may be displayed in advertising literature. If any portion of the NOA is displayed, then it shall be done in its entirety.

INSPECTION: A copy of this entire NOA shall be provided to the user by the manufacturer or its distributors and shall be available for inspection at the job site at the request of the Building Official.

This NOA revises NOA # 01-0111.01 and consists of pages 1 through 3.
The submitted documentation was reviewed by Frank Zuloaga, RRC.

ROOFING ASSEMBLY APPROVAL

Category:	Roofing
Sub-Category:	Roof Ventilators
Materials:	Aluminum
Maximum Design Pressure	N/A.
Fire Classification:	N/A

TRADE NAMES OF PRODUCTS MANUFACTURED OR LABELED BY APPLICANT:

Product	Dimensions	Test Specification	Product Description
Multipitch™ Filtervent Ridge Vent	See detail drawing herein	TAS-100	Low profile attic ridge vent for installation in shingle roof systems. Formed from .019" aluminum embossed to a thickness of .024".

EVIDENCE SUBMITTED:

Test Agency/Identifier	Name	Report	Date
Center for Applied Engineering, Inc.	TAS 100 Wind Driven Rain	07-07-00-68	04/27/94

APPROVED APPLICATIONS:

Slot: Cut a minimum 1½" to 3" slot along the apex of the roof by cutting ¾" to 1½" on each side of the ridge. The slot shall terminate approximately 6" from the rake edge.

Installation: Join ridge vent sections with connector plugs. Extend ridge vent past ends of slot to full length of ridge and cut final section. Place ridge vent centered over the void and install end plug on the end of the vent sealed with 100% silicone sealant. Apply 100% silicone sealant caulk to the bottom flange of the Air Vent Multipitch™ Filtervent Ridge Vent. Align joined ridge vent over slot and fasten in place using 1½" aluminum screw shank, or aluminum roofing nails at a maximum spacing of 8" o.c. using the predrilled nail holes with the first nail 1½" to 2" from the vent end. Place straps over joints and fasten in place with two fasteners per side of strap. Use connector straps at each end of vent run.

Net Free Area: Refer to manufacturers published literature

Minimum Slope: 2:12

LIMITATIONS:

1. Refer to applicable building codes for required ventilation.
2. Air Vent Multipitch™ Filtervent Ridge Vent shall not be installed on roof mean heights greater than 33 feet.
3. All products listed herein shall have a quality assurance audit in accordance with the Florida Building Code and Rule 9B-72 of the Florida Administrative Code.

DETAIL A

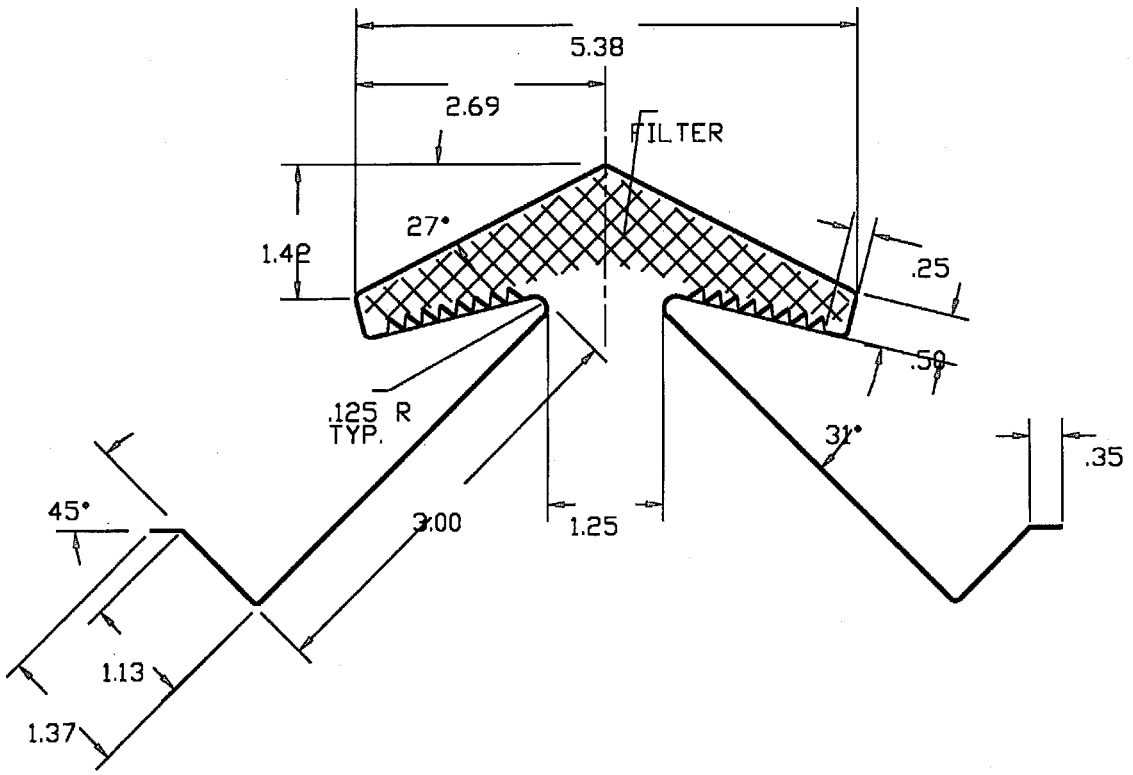

END OF THIS ACCEPTANCE