MIAMI-DADE

BUILDING CODE COMPLIANCE OFFICE (BCCO)
PRODUCT CONTROL DIVISION

MIAMI-DADE COUNTY, FLORIDA
METRO-DADE FLAGLER BUILDING
140 WEST FLAGLER STREET, SUITE 1603
MIAMI, FLORIDA 33130-1563
(305) 375-2901 FAX (305) 375-2908

NOTICE OF ACCEPTANCE (NOA)

Air Vent, Inc.
3000 West Commerce Street
Dallas, TX 75212

SCOPE:

This NOA is being issued under the applicable rules and regulations governing the use of construction materials. The documentation submitted has been reviewed by Miami-Dade County Product Control Division and accepted by the Board of Rules and Appeals (BORA) to be used in Miami Dade County and other areas where allowed by the Authority Having Jurisdiction (AHJ).

This NOA shall not be valid after the expiration date stated below. The Miami-Dade County Product Control Division (In Miami Dade County) and/or the AHJ (in areas other than Miami Dade County) reserve the right to have this product or material tested for quality assurance purposes. If this product or material fails to perform in the accepted manner, the manufacturer will incur the expense of such testing and the AHJ may immediately revoke, modify, or suspend the use of such product or material within their jurisdiction. BORA reserves the right to revoke this acceptance, if it is determined by Miami-Dade County Product Control Division that this product or material fails to meet the requirements of the applicable building code.

This product is approved as described herein, and has been designed to comply with the Florida Building Code, including the High Velocity Hurricane Zone.

DESCRIPTION: Air Vent SLA Static Roof Vent

LABELING: Each unit shall bear a permanent label with the manufacturer's name or logo, city, state and following statement: "Miami-Dade County Product Control Approved", unless otherwise noted herein.

RENEWAL of this NOA shall be considered after a renewal application has been filed and there has been no change in the applicable building code negatively affecting the performance of this product.

TERMINATION of this NOA will occur after the expiration date or if there has been a revision or change in the materials, use, and/or manufacture of the product or process. Misuse of this NOA as an endorsement of any product, for sales, advertising or any other purposes shall automatically terminate this NOA. Failure to comply with any section of this NOA shall be cause for termination and removal of NOA.

ADVERTISEMENT: The NOA number preceded by the words Miami-Dade County, Florida, and followed by the expiration date may be displayed in advertising literature. If any portion of the NOA is displayed, then it shall be done in its entirety.

INSPECTION: A copy of this entire NOA shall be provided to the user by the manufacturer or its distributors and shall be available for inspection at the job site at the request of the Building Official.

This NOA revises NOA # 02-1029.05 and consists of pages 1 through 4.
The submitted documentation was reviewed by Frank Zuloaga, RRC.

ROOFING COMPONENT APPROVAL

Category: Roofing
Sub-Category: 07720 Static Roof Vent

Materials: Aluminum
Maximum Design Pressure N/A.
Fire Classification: N/A

TRADE NAMES OF PRODUCTS MANUFACTURED OR LABELED BY APPLICANT

Product	Dimensions	Test Specification	Product Description
Air Vent SLA Static Roof Vent	20-$^{3}/_{8}$" x 15-$^{7}/_{8}$" x 5"	TAS 100(A)	Aluminum Static louvered roof ventilation system

EVIDENCE SUBMITTED

Test Agency	Test Identifier	Description	Date
Architectural Testing	10-41491.01	TAS 100(A)	07/22/01

APPROVED ASSEMBLIES

Tradename: Air Vent SLA Static Roof Vent

System Type C: Mechanical attachment of static vent over composite shingles.

Cutout: Vents shall be evenly centered. Center the vent hole between rafters and 18" maximum down from the ridgeline to keep the top of the roof vent below the ridgeline. Mark this position. Using marked position as center point, scribe a 9.25-inch diameter circle. Starting with the drill hole cut vent hole.

Installation: Vents should be evenly spaced on the rear slope of the roof.

Remove roofing nails from top row of shingles so the flashing of the roof vent will slide under shingles. Apply approved roof cement around the edge of the hole. Carefully slide base of vent under shingles with non-louvered, slant back facing the peak of roof. Make sure the throat of the vent is centered over vent hole. Fasten the base to roof decking at all corners and centers of the vent flange for a total of eight nails. (See Air Vent SLA Static Roof Vent profile drawings herein.) Nails shall be a minimum of 1¼" annular ring shank, or of sufficient length to penetrate through the sheathing a minimum $^{3}/_{16}$ of an inch. Seal all seams and nail heads with approved roofing cement.

Ventilation Calculations: Refer to manufacturer's published literature

Minimum Slope: 2:12

LIMITATIONS:

1. Refer to applicable building codes for required ventilation.
2. Air Vent SLA Static Roof Vent shall not be installed on roof mean heights greater than 33 feet.
3. All products listed herein shall have a quality assurance audit in accordance with the Florida Building Code and Rule 9B-72 of the Florida Administrative Code.

DETAIL DRAWINGS

Air Vent SLA Static Vent

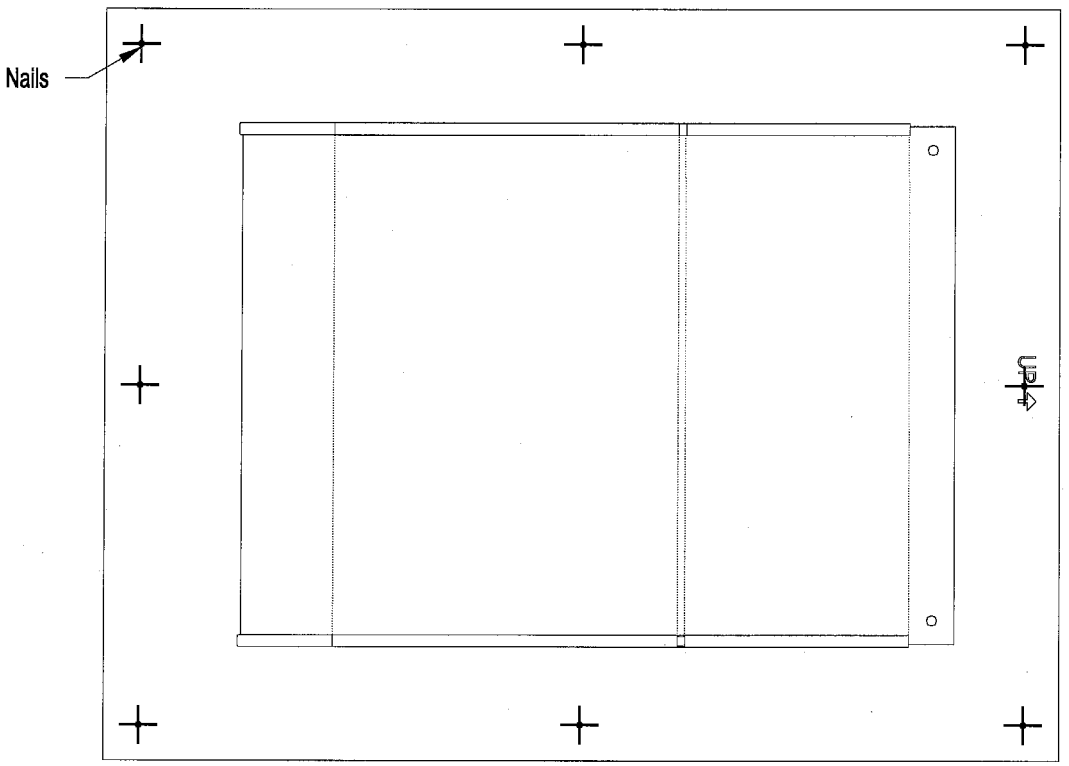

Air Vent SLA Static Vent

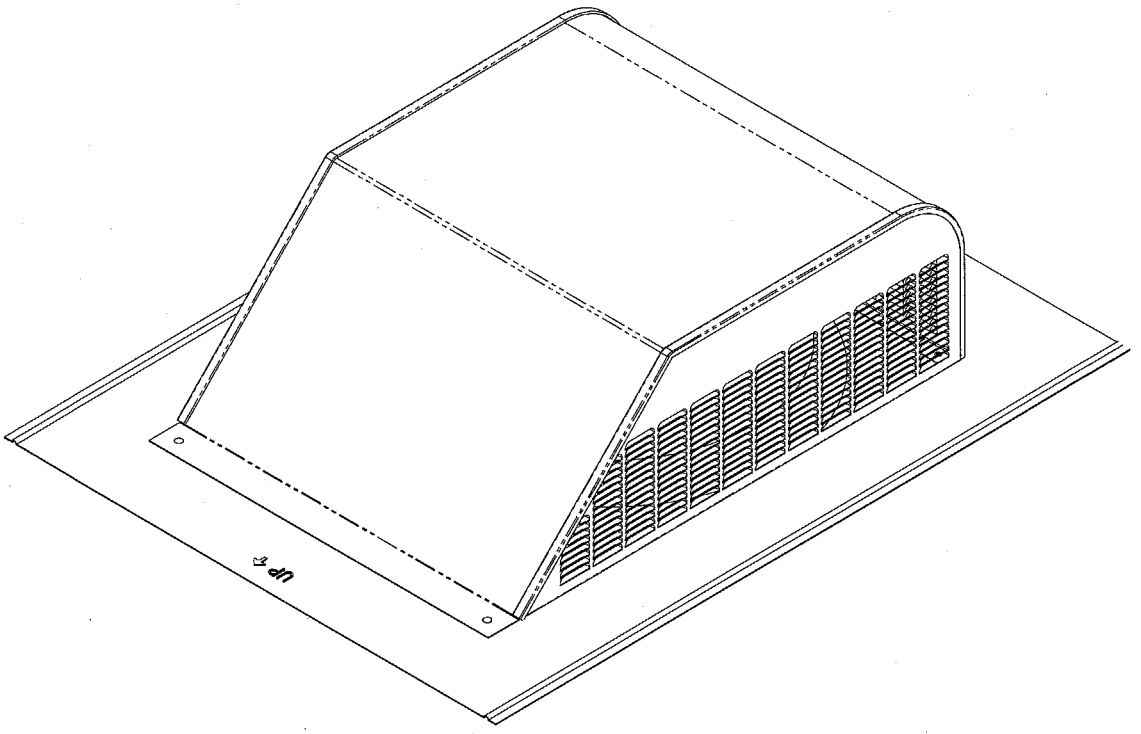

END OF THIS ACCEPTANCE