MIAMI-DADE

BUILDING CODE COMPLIANCE OFFICE (BCCO)
PRODUCT CONTROL DIVISION

MIAMI-DADE COUNTY, FLORIDA
METRO-DADE FLAGLER BUILDING
140 WEST FLAGLER STREET, SUITE 1603
MIAMI, FLORIDA 33130-1563
(305) 375-2901 FAX (305) 375-2908

NOTICE OF ACCEPTANCE (NOA)

Marvin Windows & Doors
Highway 11
Warroad MN 56763-0100

SCOPE:
This NOA is being issued under the applicable rules and regulations governing the use of construction materials. The documentation submitted has been reviewed by Miami-Dade County Product Control Division and accepted by the Board of Rules and Appeals (BORA) to be used in Miami Dade County and other areas where allowed by the Authority Having Jurisdiction (AHJ).

This NOA shall not be valid after the expiration date stated below. The Miami-Dade County Product Control Division (In Miami Dade County) and/or the AHJ (in areas other than Miami Dade County) reserve the right to have this product or material tested for quality assurance purposes. If this product or material fails to perform in the accepted manner, the manufacturer will incur the expense of such testing and the AHJ may immediately revoke, modify, or suspend the use of such product or material within their jurisdiction. BORA reserves the right to revoke this acceptance, if it is determined by Miami-Dade County Product Control Division that this product or material fails to meet the requirements of the applicable building code.
This product is approved as described herein, and has been designed to comply with the High Velocity Hurricane Zone of the Florida Building Code.

DESCRIPTION: Series "StormPlus HP" Aluminum Clad Wood Casement Window

APPROVAL DOCUMENT: Drawing **No. 1235**, titled "Stormplus HP Aluminum Clad Wood Casement Window", sheets 1 through 4of 4, prepared, signed and sealed by Warren W. Schaefer, P.E., dated 6/13/03, bearing the Miami-Dade County Product Control Revision stamp with the Notice of Acceptance number and expiration date by the Miami-Dade County Product Control Division.

MISSILE IMPACT RATING: None

LABELING: Each unit shall bear a permanent label with the manufacturer's name or logo, city, state and following statement: "Miami-Dade County Product Control Approved", unless otherwise noted herein.

RENEWAL of this NOA shall be considered after a renewal application has been filed and there has been no change in the applicable building code negatively affecting the performance of this product.

TERMINATION of this NOA will occur after the expiration date or if there has been a revision or change in the materials, use, and/or manufacture of the product or process. Misuse of this NOA as an endorsement of any product, for sales, advertising or any other purposes shall automatically terminate this NOA. Failure to comply with any section of this NOA shall be cause for termination and removal of NOA.

ADVERTISEMENT: The NOA number preceded by the words Miami-Dade County, Florida, and followed by the expiration date may be displayed in advertising literature. If any portion of the NOA is displayed, then it shall be done in its entirety.

INSPECTION: A copy of this entire NOA shall be provided to the user by the manufacturer or its distributors and shall be available for inspection at the job site at the request of the Building Official.
This NOA **revises NOA # 02-0415.02** and, consists of this page 1 as well as approval document mentioned above.
The submitted documentation was reviewed by **Theodore Berman, P.E.**

11/24/2003

PRODUCT CONTROL ACCEPTED

Marvin Windows & Doors

NOTICE OF ACCEPTANCE: EVIDENCE SUBMITTED

A. DRAWINGS

1. Manufacturer's die drawings and sections
2. Drawing **No. 1235**, titled "Stormplus HP Aluminum Clad Wood Casement Window", sheets 1 through 4of 4, prepared, signed and sealed by Warren W. Schaefer, P.E.

B. TESTS

1. Test reports on: 1) Air Infiltration Test, per TAS 202-94
   2) Uniform Static Air Pressure Test, Loading per TAS 202-94
   3) Water Resistance Test, per FBC, TAS 202-94
   4) Forced Entry Test, Per FBC 2411.3.2.1 and TAS 202-94

   along with installation diagram of aluminum clad wood casement window, prepared by Architectural Testing, Inc., Test Report No. **ATI-02-46320.01**, dated 07/31/03, signed and sealed by Joseph A. Reed, P.E.
2. Test reports on: 1) Air Infiltration Test, per TAS 202-94
   2) Uniform Static Air Pressure Test, Loading per TAS 202-94
   3) Water Resistance Test, per FBC, TAS 202-94
   4) Forced Entry Test, Per FBC 2411.3.2.1 and TAS 202-94
   along with installation diagram of aluminum clad wood casement window, prepared by Architectural Testing, Inc., Test Report No. **ATI-02-43796.01**, dated 02/05/03, signed and sealed by Joseph A. Reed, P.E.

C. CALCULATIONS

1. Anchor Calculations and Structural Analysis, prepared by W.W. Schaefer Engineering & Consulting, P.A., dated 8/25/03, signed and sealed by Warren W. Schaefer, P.E.
2. Complies with ASTM E1300-98.

D. QUALITY ASSURANCE

1. Miami Dade Building Code Compliance Office (BCCO).

E. MATERIAL CERTIFICATIONS

1. None

F. STATEMENTS

1. Statement letter of conformance, dated September 08, 2003, signed and sealed by Warren W. Schaefer, P.E.
2. Statement letter of no financial interest, dated September 08, 2003, signed and sealed by Warren W. Schaefer, P.E.

G. OTHER

1. Notice of Acceptance **No. 02-0415.02**, issued to Marvin Windows & Doors for their Series "Casemaster Picture HP" Wood Casement Window & Aluminum Clad Wood, approved on 05/09/02 and expiring on 04/18/.
2. Letter from the consultant stating that the product is in compliance with the Florida Building Code (FBC).

Theodore Berman, P.E.
Deputy Director, Product Control Division
NOA No 03-1001.02
Expiration Date: April 18, 2007
Approval Date: December 18, 2003

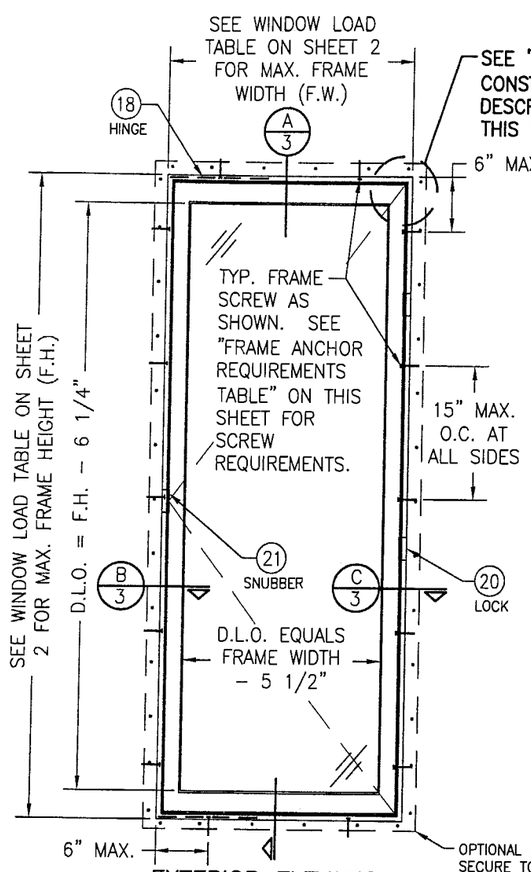

EXTERIOR ELEVATION
SINGLE CASEMENT WINDOW
SCALE: 3/4"=1'-0"

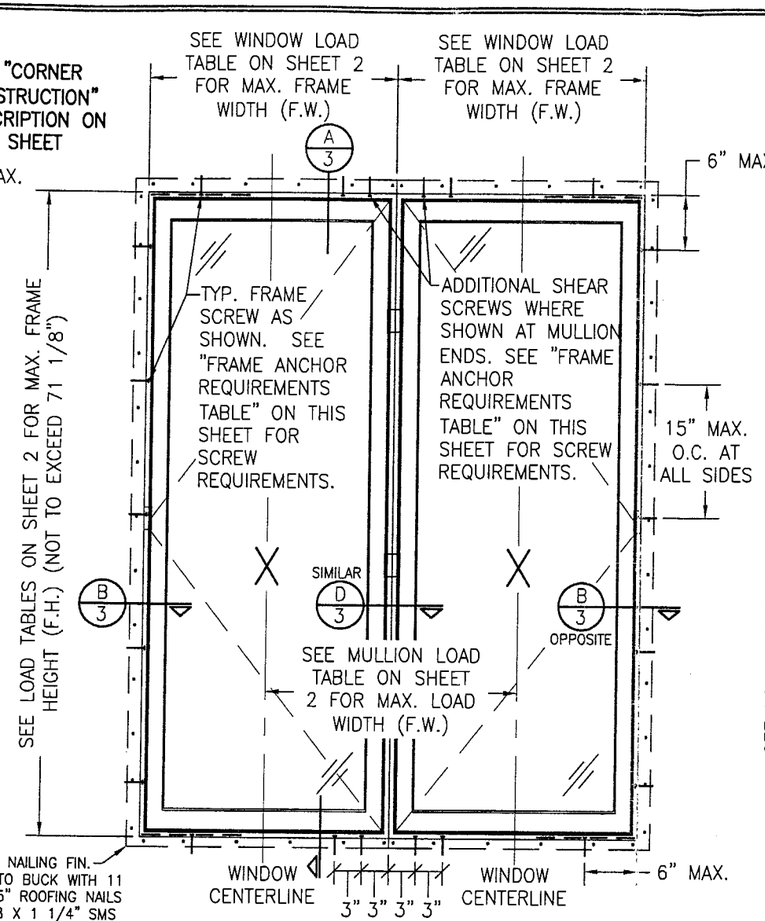

EXTERIOR ELEVATION
MULTIPLE CASEMENT WINDOW UNIT
SCALE: 3/4"=1'-0"
SEE SINGLE WINDOW ELEVATION FOR DETAIL NOT SHOWN

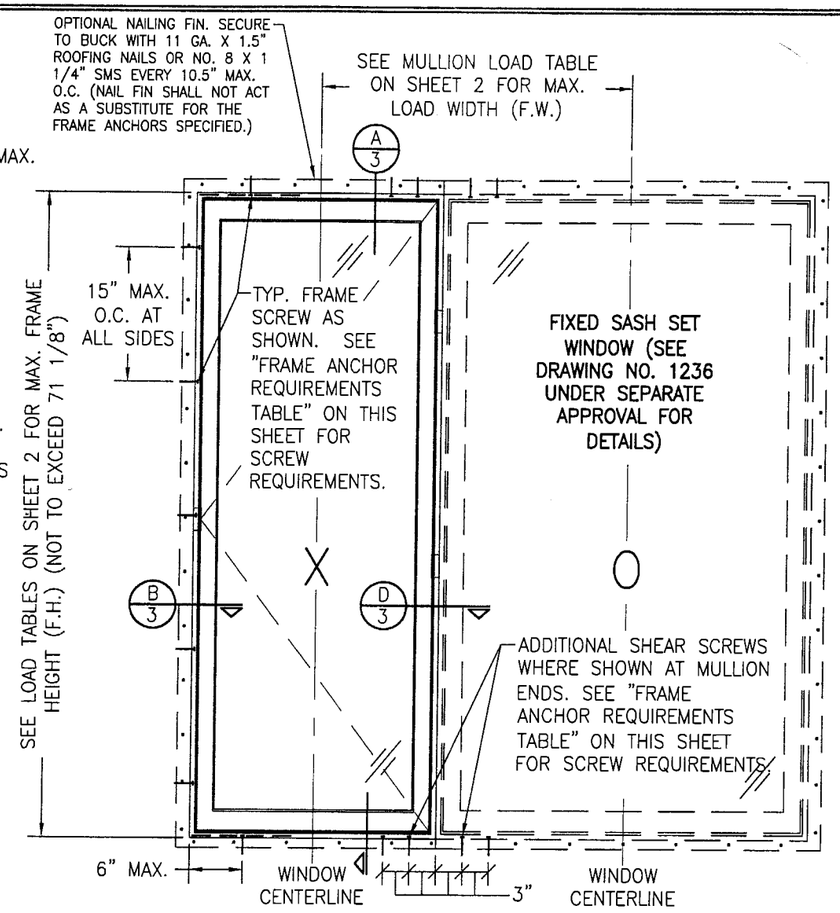

EXTERIOR ELEVATION
MULTIPLE OPERABLE/FIXED WINDOW UNIT
(MAX. FOUR UNITS MAY BE COMBINED IN ONE OPENING WITH ANY COMBINATION OF FIXED & OPERABLE)
SCALE: 3/4"=1'-0"
SEE SINGLE WINDOW ELEVATION FOR DETAIL NOT SHOWN

GENERAL NOTES

1. THESE WINDOW SYSTEMS HAVE BEEN TESTED, ANALYZED AND APPROVED FOR DESIGN PRESSURES NOT TO EXCEED THOSE SHOWN IN THE "ALLOWABLE DESIGN LOADS" TABLES.
2. BUCKING, OPENINGS & BUCKING FASTENERS MUST BE DESIGNED & TRANSFER TO WITHSTAND WIND LOADS TO THE STRUCTURE.
3. ALL HARDWARE & FASTENERS SHALL BE IN ACCORDANCE WITH THESE DRAWINGS & MAY NOT VARY UNLESS SPECIFICALLY MENTIONED ON THE DRAWINGS.
4. THE DETAILS & SPECIFICATIONS SHOWN HEREIN REPRESENT THE PRODUCTS TESTED & PROPOSED FOR WATER, AIR, FORCED ENTRY & UNIFORM STATIC AIR PRESSURE TESTING IN CONFORMANCE WITH FLORIDA BUILDING CODE PROTOCOLS TAS 202 FOR NON-IMPACT WINDOWS.
5. THESE WINDOW SYSTEMS HAVE BEEN DESIGNED IN ACCORDANCE WITH THE FLORIDA BUILDING CODE (FBC) FOR HIGH VELOCITY HURRICANE ZONE AREAS.
6. FOR ALL NON-IMPACT WINDOWS, FLORIDA BUILDING CODE APPROVED SHUTTERS ARE REQUIRED.
7. ALL ANCHORS SHALL BE INSTALLED AS SPECIFIED ON THESE DRAWINGS. SPECIFIED EMBEDMENT TO BASE MATERIAL SHALL BE BEYOND WALL FINISH OR STUCCO.

CORNER CONSTRUCTION

JAMB CORNERS: WOOD JAMB MEMBERS ARE STEP BUTTED & SECURED WITH THREE 2" STAPLES THROUGH HEAD & SILL JAMBS INTO SIDE JAMBS & ONE 2 1/4" STAPLE THROUGH SIDE JAMBS INTO HEAD & SILL JAMBS. CLAD CORNERS ARE SILICONE INJECTED & SECURED WITH INTERNAL NYLON CORNER KEYS WHICH ARE STAKED IN PLACE.

SASH CORNERS: WOOD SASH MEMBERS USE SLOT-AND-TENON CORNER JOINERY & SECURED WITH TWO 0.500" X 1.375" STAPLES PER CORNER. THE CLAD CORNERS ARE SECURED WITH ALUMINUM CORNER KEYS & ONE 1.50" SCREW PER CORNER.

FRAME ANCHOR REQUIREMENTS TABLE

OPENING TYPE (SUBSTRATE)	JAMB TO OPENING FASTENER TYPE	MINIMUM EMBED	MINIMUM EDGE DIST.
2X_ WOOD FRAME OR BUCK	NO. 10 SMS SCREW	1 1/4"	3/4"
CMU/CONCRETE	(1) 3/16" CONCRETE SCREW	1 1/4"	2"
(1) CONCRETE SCREWS SHALL BE ELCO OR ITW RAMSET/RED HEAD TAPCONS, HILTI KWIK-CON II OR POWERS RAWL TAPPER (HARDENED STEEL OR S.S.).			

* ANCHOR NOTE: FRAME MAY BE EITHER DIRECT MOUNTED TO THE OPENING, MOUNTED ONTO A CONTINUOUS WOOD SPACER, OR ANCHORED TO A MIN. 2x4 NO. 3 SOUTHERN PINE WOOD BUCK. WHEN ANCHORED TO A 2x4 BUCK, NO. 10 SHEAR SCREWS SHALL BE USED. WHEN DIRECT MOUNTED OR MOUNTED WITH SPACER, 3/16" CONCRETE SCREWS SHALL BE USED. SEE "ANCHOR REQUIREMENTS TABLE" FOR EMBED REQUIREMENTS.

ALLOWABLE DESIGN PRESSURE
SEE LOAD TABLES ON SHEET 2

PRODUCT REVISED
as complying with the Florida Building Code
Acceptance No. 03-1001.02
Expiration Date 04/18/07
By Glenda Kaiman
Miami Dade Product Control Division

NO.	REVISION DESCRIPTION	BY	DATE

DRAWN BY: K.P.S. | CHECKED BY: W.W.S.
PLOT: 1=16 | DATE: 06/13/03

DRAWING TITLE: STORMPLUS HP ALUMINUM CLAD WOOD CASEMENT WINDOW

MANUFACTURER: MARVIN WINDOWS & DOORS
HIGHWAY 11 WEST
WARROAD, MN 56763-0100
218-386-1430

CONSULTANTS: W. W. SCHAEFER ENGINEERING & CONSULTING, P.A.
8895 N. MILITARY TRAIL; SUITE C-204
PALM BEACH GARDENS, FL 33410
PHONE: 561-775-4902 FAX: 561-775-4903

CERTIFICATION
SEP 08 2006
WARREN W. SCHAEFER, P.E.
P.E. NO. 44135

DRAWING NO. 1235 | REV.
SHEET NO. 1 OF 4

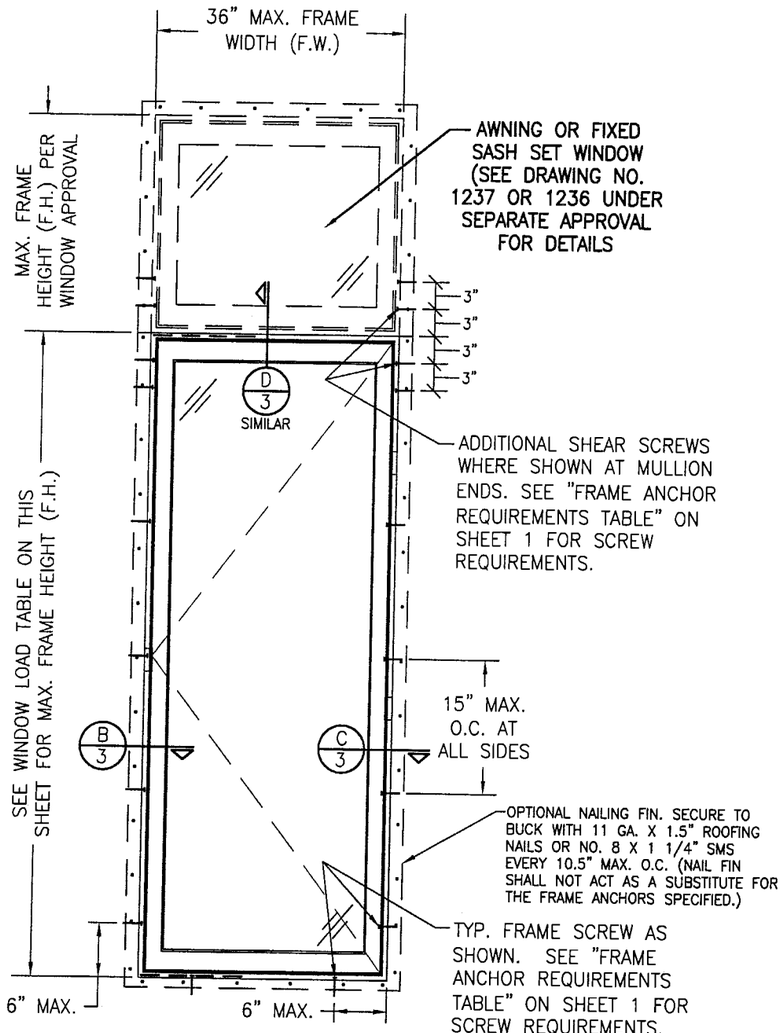

EXTERIOR ELEVATION
SINGLE CASEMENT WINDOW WITH TRANSOM

SCALE: 3/4"=1'-0"

NOTE: SINCE THE 36" MULLION SPAN ALLOWABLE PRESSURE EXCEEDS THE MAXIMUM ALLOWABLE PRESSURE FOR ALL THE SINGLE WINDOW SIZES, THE SINGLE WINDOW PRESSURES WILL CONTROL OVER MULLION LOADS FOR THIS TRANSOM ASSEMBLY. SEE LOAD TABLE ON THIS SHEET FOR CONTROLLING ALLOWABLE PRESSURES ON THIS ASSEMBLY & VERIFY FIXED WINDOW PRESSURE WITH THE FIXED WINDOW APPROVAL.

ALLOWABLE DESIGN LOAD TABLE (INDIVIDUAL WINDOWS ONLY)

WINDOW SIZE		GLASS OPTION 1		GLASS OPTION 2 & 3	
MAX. FRAME WIDTH (IN.)	MAX. FRAME HEIGHT (IN.)	POS (PSF)	NEG (PSF)	POS (PSF)	NEG (PSF)
36"	48"	55.0	55.0	55.0	55.0
	40"	65.0	65.0	65.0	65.0
	36"	65.0	65.0	65.0	65.0
	32"	65.0	65.0	65.0	65.0
	28"	65.0	65.0	65.0	65.0
	24"	65.0	65.0	65.0	65.0
32"	60"	48.4	48.4	57.8	57.8
	54"	55.0	55.0	55.0	55.0
	48"	61.9	61.9	61.9	61.9
	40"	73.1	73.1	73.1	73.1
	36"	73.1	73.1	73.1	73.1
	32"	73.1	73.1	73.1	73.1
	28"	73.1	73.1	73.1	73.1
	24"	73.1	73.1	73.1	73.1
28"	72"	40.6	40.6	55.0	55.0
	64"	45.6	45.6	61.9	61.9
	60"	49.6	49.6	66.0	66.0
	54"	57.5	57.5	73.3	73.3
	48"	69.4	69.4	80.0	82.5
	40"	80.0	83.6	80.0	83.6
	36"	80.0	83.6	80.0	83.6
	32"	80.0	83.6	80.0	83.6
	28"	80.0	83.6	80.0	83.6
	24"	80.0	83.6	80.0	83.6
24"	72"	54.2	54.2	64.2	64.2
	64"	57.6	57.6	72.2	72.2
	60"	60.6	60.6	77.0	77.0
	54"	66.2	66.2	80.0	85.6
	48"	74.3	74.3	80.0	96.3
	40"	80.0	93.7	80.0	97.5
	36"	80.0	97.5	80.0	97.5
	32"	80.0	97.5	80.0	97.5
	28"	80.0	97.5	80.0	97.5
	24"	80.0	97.5	80.0	97.5
20"	72"	77.0	77.0	77.0	77.0
	64"	80.0	86.6	80.0	86.6
	60"	80.0	92.0	80.0	92.4
	54"	80.0	96.1	80.0	100.0
16"	72"	80.0	96.3	80.0	96.3
	64"	80.0	100.0	80.0	100.0

GLASS OPTION 1 = I.G. GLASS WITH 1/8" (3mm) ANNEALED GLASS PANES

GLASS OPTION 2 = I.G. GLASS WITH 5/32" (4mm) ANNEALED GLASS PANES

GLASS OPTION 3 = I.G. GLASS WITH 1/8" (3mm) TEMPERED GLASS PANES

NOTES:

1. WINDOW SIZE DIMENSIONS SHOWN ARE MAXIMUM SIZES. SMALLER SIZES SHALL APPLY TO LOADS EQUAL TO THE NEAREST LARGER SIZE SHOWN IN TABLE.
2. FRAME DIMENSIONS SHOWN ARE NOMINAL CALL OUT DIMENSIONS. ACTUAL FRAME HEIGHT DIMENSIONS ARE TYPICALLY 7/8" LESS THAN NOMINAL SHOWN.

VERTICAL MULLION LOAD TABLE

MAXIMUM MULLION SPAN (IN.)	MAXIMUM LOAD WIDTH (IN.)	(2) ALLOWABLE PRESSURE (POS & NEG) (PSF)
72"	54"	38.5
	48"	43.3
	40"	52.0
	36"	57.8
	32"	65.0
	28"	74.3
	24"	86.7
	20"	100.0
64"	(1) 50" OR LARGER	46.8
	48"	48.8
	40"	58.5
	36"	65.0
	32"	73.1
	28"	83.6
	24"	97.5
	20"	100.0
60"	(1) 48" OR LARGER	52.0
	40"	62.4
	36"	69.3
	32"	78.0
	28"	89.1
	24"	100.0
54"	(1) 45" OR LARGER	61.6
	40"	69.3
	36"	77.0
	32"	86.7
	28"	99.0
	24"	100.0
48"	(1) 42" OR LARGER	74.3
	40"	78.0
	36"	86.7
	32"	97.5
	28"	100.0
40"	(1) 38" OR LARGER	98.5
	36"	100.0

(1) WHEN THE "LOAD WIDTH" EXCEEDS THAT SHOWN, THE LOAD DISTRIBUTION TO THE MULLION DOES NOT INCREASE ANY FURTHER DUE TO FIXED WINDOW TRAPEZOIDAL LOAD DISTRIBUTION BEING MOVED MORE TO THE HEAD & SILL VS. THE SIDES.

(2) FOR "XO" CONFIGURATIONS, THE LOADS IN THIS TABLE ARE CONSERVATIVE DUE TO ALL LOADING BEING CONSIDERED AS RECTANGULAR DISTRIBUTED FOR BOTH WINDOWS VS. TRAPEZOIDAL FOR FIXED WINDOW. IF MORE EXACT LOADING IS REQUIRED FOR AN "XO" CONDITION FOR ANY ONE JOB, IT WILL HAVE TO BE VERIFIED BY A FLORIDA CERTIFIED ENGINEER & SUBMITTED TO THE RESPECTIVE BUILDING DEPARTMENT AS A JOB SPECIFIC REQUEST.

PRODUCT REVIEWED
as complying with the Florida Building Code
Acceptance No. 03-1001.02
Expiration Date 04/18/07
By Glendre Barnes
Miami Dade Product Control Division

DRAWN BY: K.P.S.	CHECKED BY: W.W.S.
PLOT: 1=16	DATE: 06/13/03

NO.	REVISION DESCRIPTION	BY	DATE

DRAWING TITLE
STORMPLUS HP ALUMINUM CLAD WOOD CASEMENT WINDOW

MANUFACTURER
MARVIN WINDOWS & DOORS
HIGHWAY 11 WEST
WARROAD, MN 56763-0100
218-386-1430

CONSULTANTS
W. W. SCHAEFER ENGINEERING & CONSULTING, P.A.
8895 N. MILITARY TRAIL, SUITE C-204
PALM BEACH GARDENS, FL 33410
PHONE: 561-775-4902 FAX: 561-775-4903

CERTIFICATION
SEP 08 2003
WARREN W. SCHAEFER, P.E.
P.E. NO. 44135

DRAWING NO. 1235
REV.

SHEET NO. 2 OF 4

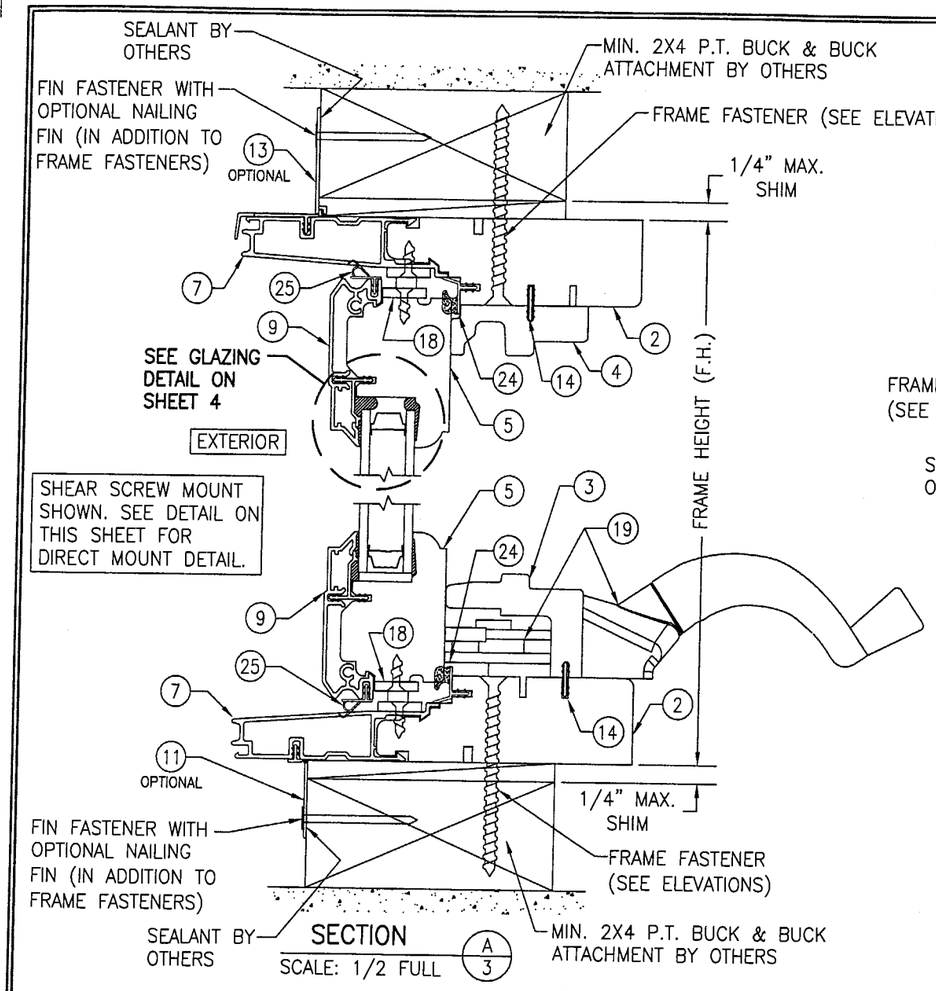

SECTION A/3
SCALE: 1/2 FULL

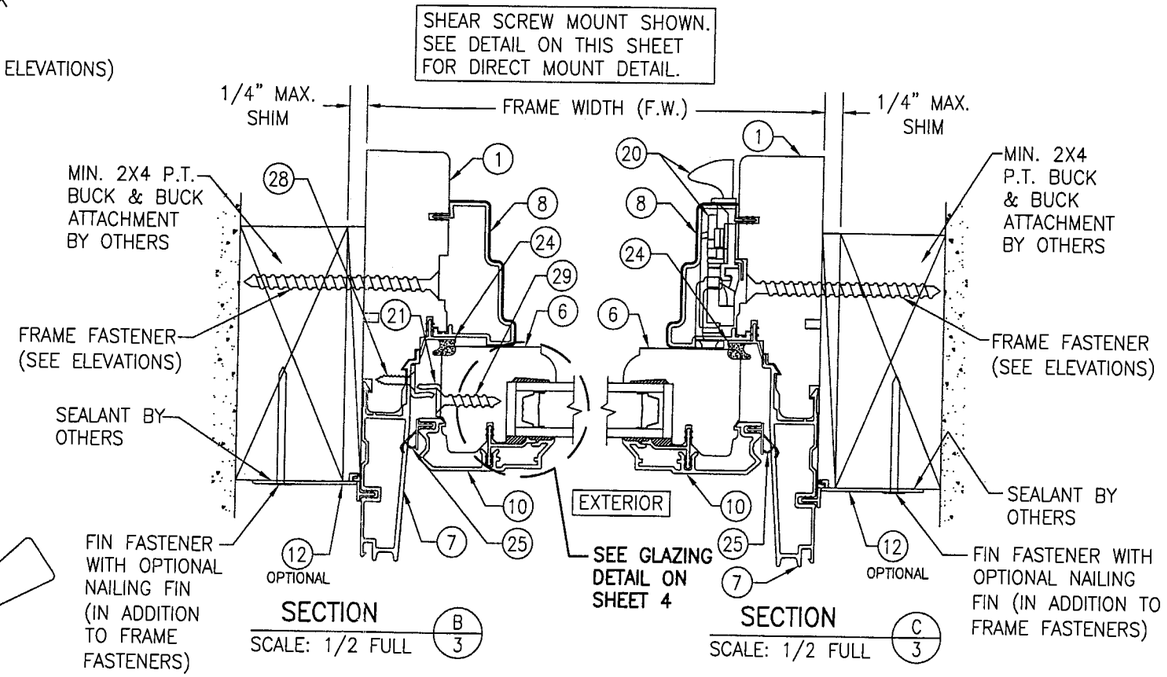

SECTION B/3
SCALE: 1/2 FULL

SECTION C/3
SCALE: 1/2 FULL

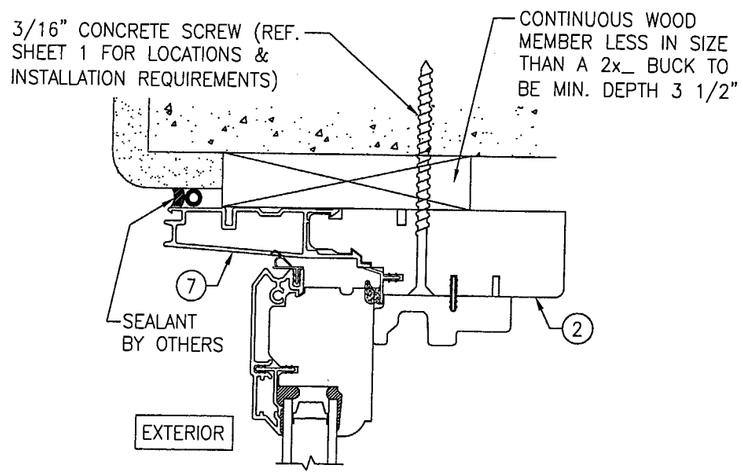

OPTIONAL DIRECT MOUNT DETAIL
FOR DETAIL NOT SHOWN, SEE OTHER SECTIONS
(HEAD SECTION SHOWN, SIDES AND SILL SIMILAR)

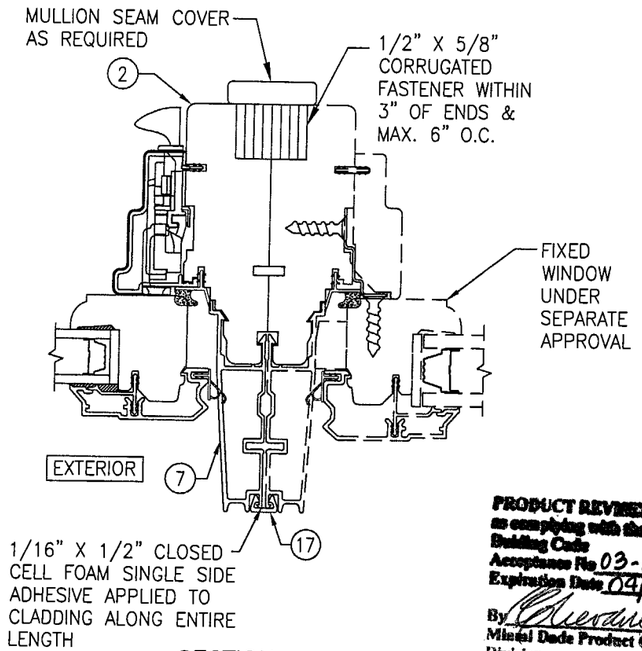

SECTION D/3
SCALE: 1/2 FULL
(SEE OTHER SECTIONS FOR DETAILS NOT SHOWN)

PRODUCT REVISED
as complying with the Florida Building Code
Acceptance No 03-1001.02
Expiration Date 04/18/07
By Gleodine Berne
Miami Dade Product Control Division

DRAWN BY: K.P.S.	CHECKED BY: W.W.S.
PLOT: 1=2	DATE: 06/13/03

NO.	REVISION DESCRIPTION	BY	DATE

DRAWING TITLE
STORMPLUS HP ALUMINUM CLAD WOOD CASEMENT WINDOW

MANUFACTURER
MARVIN WINDOWS & DOORS
HIGHWAY 11 WEST
WARROAD, MN 56763-0100
218-386-1430

CONSULTANTS
W. W. SCHAEFER ENGINEERING & CONSULTING, P.A.
8895 N. MILITARY TRAIL; SUITE C-204
PALM BEACH GARDENS, FL 33410
PHONE: 561-775-4902 FAX: 561-775-4903

CERTIFICATION
SEP 08 2003
WARREN W. SCHAEFER, P.E.
P.E. NO. 44135

DRAWING NO. 1235
REV.
SHEET NO. 3 OF 4

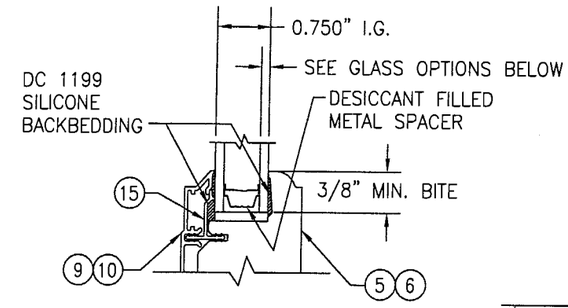

GLAZING DETAIL

GLASS OPTION 1 = I.G. GLASS WITH 1/8" (3mm) ANNEALED GLASS PANES

GLASS OPTION 2 = I.G. GLASS WITH 5/32" (4mm) ANNEALED GLASS PANES

GLASS OPTION 3 = I.G. GLASS WITH 1/8" (3mm) TEMPERED GLASS PANES

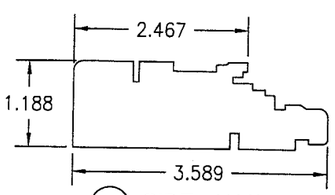

1 SIDE JAMB

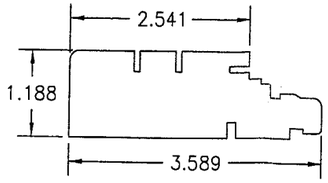

2 HEAD & SILL JAMB

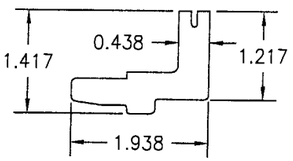

3 HARDWARE COVER

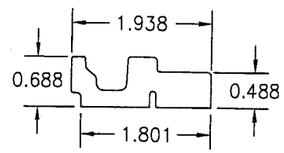

4 HEAD JAMB STOP

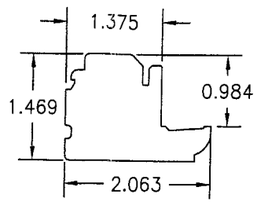

5 SASH RAIL

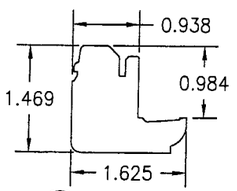

6 SASH STILE

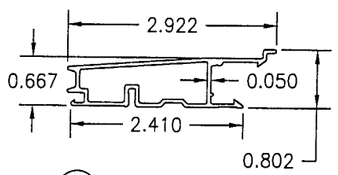

7 FRAME CLADDING

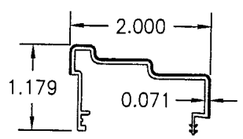

8 SIDE JAMB STOP

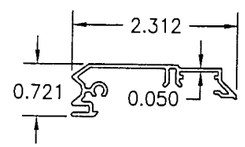

9 RAIL CLADDING

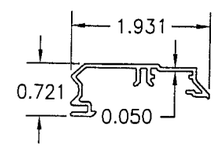

10 STILE CLADDING

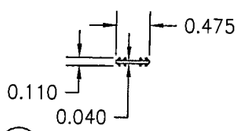

14 CONNECTING BARB

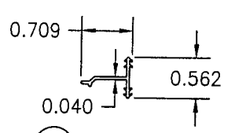

15 GLAZING BEAD

ITEM #	DWG #	ITEM DESCRIPTION	MANUFACTURER/NOTES
		PARTS	
1	00005930	SIDE JAMB	* WOOD
2	00005932	HEAD & SILL JAMB	* WOOD
3	00022585	HARDWARE COVER	* WOOD
4	00022590	HEAD JAMB STOP	* WOOD
5	00022797	SASH RAIL	* WOOD
6	00022845	SASH STILE	* WOOD
7	00002334	FRAME CLADDING	6063-T5 ALUMINUM
8	00023239	SIDE JAMB STOP	VINYL
9	00023565	RAIL CLADDING	6063-T5 ALUMINUM
10	00023566	STILE CLADDING	6063-T5 ALUMINUM
11	00005281	SILL NAILING FIN	VINYL
12	00005291	HINGED NAILING FIN	VINYL
13	00005332	NAILING FIN/DRIP CAP	VINYL
14	00005685	CONNECTING BARB	VINYL
15	000023755	GLAZING BEAD	VINYL
17	00002026	MULLION CLIP/BRACKET	6063-T5 ALUMINUM
		HARDWARE	
18	00014623	CONCEALED CASEMENT HINGE	TRUTH (TOP & BOTTOM SASH RAILS)
19	00014370	DUAL ARM ROTO OPERATOR	TRUTH (9" FROM HINGE JAMB ON SILL)
20	00003899	DUAL CASEMENT 2-POINT LOCK	TRUTH
21	00003736	2" LONG S.S. SNUBBER (NOT REQ'D WHEN FRAME HEIGHT IS 48" OR LESS)	MARVIN 403 S.S. (AT MID SPAN OF HINGE JAMB)
		SEALS AND SEALANTS	
24	00011054	FRAME WEATHERSTRIPPING	AMESBURY
25	00013385	SASH WEATHERSTRIPPING	INTEK
		MISC. FASTENERS	
28	–	7-19 X .5" AB/TEK 2, FULL THREAD	2 PER SNUBBER INTO JAMB
29	–	NO. 8 X 1" SS SCREW	2 PER SNUBBER INTO STILE

* WOOD USED WITH TEST UNITS WAS PONDEROSA PINE. ALTERNATE WOOD SPECIES TO BE APPLICABLE WITH THESE WINDOWS IS MIN. GRADE 2 MAHOGANY, SOUTHERN PINE, OAK, CHERRY, MAPLE, DOUGLAS FIR & CYPRESS.

PRODUCT REVIEWED
as complying with the Florida
Building Code
Acceptance No 03-1001.02
Expiration Date 04/16/07
By [signature]
Miami Dade Product Control
Division

DRAWN BY: K.P.S.	CHECKED BY: W.W.S.
PLOT: 1=2	DATE: 06/13/03

NO.	REVISION DESCRIPTION	BY	DATE

DRAWING TITLE
STORMPLUS HP ALUMINUM CLAD WOOD CASEMENT WINDOW

MANUFACTURER
MARVIN WINDOWS & DOORS
HIGHWAY 11 WEST
WARROAD, MN 56763-0100
218-386-1430

CONSULTANTS
W. W. SCHAEFER ENGINEERING & CONSULTING, P.A.
8895 N. MILITARY TRAIL, SUITE C-204
PALM BEACH GARDENS, FL 33410
PHONE: 561-775-4902 FAX: 561-775-4903

CERTIFICATION
SEP 08 2003
WARREN W. SCHAEFER, P.E.
P.E. NO. 44135

DRAWING NO. 1235
REV.

SHEET NO. 4 OF 4