MIAMI-DADE

BUILDING CODE COMPLIANCE OFFICE (BCCO)
PRODUCT CONTROL DIVISION

MIAMI-DADE COUNTY, FLORIDA
METRO-DADE FLAGLER BUILDING
140 WEST FLAGLER STREET, SUITE 1603
MIAMI, FLORIDA 33130-1563
(305) 375-2901 FAX (305) 375-2908

NOTICE OF ACCEPTANCE (NOA)

A.C.C. Manufacturing, LLC
1300 Lake Washington Road
Melbourne, Florida 32935

SCOPE:

This NOA is being issued under the applicable rules and regulations governing the use of construction materials. The documentation submitted has been reviewed by Miami-Dade County Product Control Division and accepted by the Board of Rules and Appeals (BORA) to be used in Miami Dade County and other areas where allowed by the Authority Having Jurisdiction (AHJ).

This NOA shall not be valid after the expiration date stated below. The Miami-Dade County Product Control Division (In Miami Dade County) and/or the AHJ (in areas other than Miami Dade County) reserve the right to have this product or material tested for quality assurance purposes. If this product or material fails to perform in the accepted manner, the manufacturer will incur the expense of such testing and the AHJ may immediately revoke, modify, or suspend the use of such product or material within their jurisdiction. BORA reserves the right to revoke this acceptance, if it is determined by Miami-Dade County Product Control Division that this product or material fails to meet the requirements of the applicable building code.

This product is approved as described herein, and has been designed to comply with the High Velocity Hurricane Zone of the Florida Building Code.

DESCRIPTION: SSA / 6.8"-HR Aluminum Accordion Shutter

APPROVAL DOCUMENT: Drawing No. 03-907, titled " Viking Shutter ", sheets 1 through 12 of 12, prepared by Knezevich A Associates, Inc., dated April 09, 2003 last revision #2 dated July 29, 2003, signed and sealed by V. J. Knezevich, P.E. bearing the Miami-Dade County Product Control Revision stamp with the Notice of Acceptance number and expiration date by the Miami-Dade County Product Control Division.

MISSILE IMPACT RATING: Large and Small Missile Impact

LABELING: Each unit shall bear a permanent label with the manufacturer's name or logo, city, state and the following statement: "Miami-Dade County Product Control Approved", unless otherwise noted herein.

RENEWAL of this NOA shall be considered after a renewal application has been filed and there has been no change in the applicable building code negatively affecting the performance of this product.

TERMINATION of this NOA will occur after the expiration date or if there has been a revision or change in the materials, use, and/or manufacture of the product or process. Misuse of this NOA as an endorsement of any product, for sales, advertising or any other purposes shall automatically terminate this NOA. Failure to comply with any section of this NOA shall be cause for termination and removal of NOA.

ADVERTISEMENT: The NOA number preceded by the words Miami-Dade County, Florida, and followed by the expiration date may be displayed in advertising literature. If any portion of the NOA is displayed, then it shall be done in its entirety.

INSPECTION: A copy of this entire NOA shall be provided to the user by the manufacturer or its distributors and shall be available for inspection at the job site at the request of the Building Official.

This NOA **revises & renews NOA # 99-0702.01** and consists of this page 1, evidence submitted page(s) as well as approval document mentioned above.

The submitted documentation was reviewed by **Helmy A. Makar, P.E.**

PRODUCT CONTROL ACCEPTED

Helmy A. Makar
11/13/03

NOA No 03-1002.01
Expiration Date: 11/13/2008
Approval Date: 11/13/2003

A.C.C. Manufacturing, LLC

NOTICE OF ACCEPTANCE: EVIDENCE SUBMITTED

1. EVIDENCE SUBMITTED UNDER PREVIOUS APPROVAL # 99-0702.01

A. DRAWINGS

1. *Drawing No. 99-907, prepared by Knezevich & Associates, Inc., titled "Viking Shutter", dated December 8, 1998, last revision #1 dated March 19, 1999, sheets 1 through 6 of 6, signed and sealed by V. J. Knezevich, P.E.*

B. TESTS

1. *See Association's generic approval number 98-0137.*

C. CALCULATIONS

1. *See Association's generic approval number 98-0137.*

D. MATERIAL CERTIFICATIONS

1. *See Association's generic approval number 98-0137.*

E. STATEMENTS

1. *Release letter issued by the Southern Shutter Association, Inc., dated June 17, 1999, certifying this product to meet the criteria of product tested and approved, and allowing A.C.C. Manufacturing, LLC, to use the test results approved under Dade County Approval No. 98-0137, signed by Mr. Tim O'Connor.*
2. *Acknowledgment letter by A.C.C. Manufacturing, LLC, dated June 17, 1999, signed by Mr. Louis Campbell.*
3. *Letter by Knezevich & Associates, Inc., dated June 25, 1999, certifying that the drawing (No. 99-907) prepared for A.C.C. Manufacturing, LLC, signed and sealed by V.J. Knezevich, P.E., is engineering wise identical to Southern Shutter Association, Inc generic drawing (No. 98-254).*
4. *Acceptance Letter issued to Ms. Terry Verde on August 13, 1999 and returned signed by Ms. Terry Verde on September 8, 1999, indicating to please issue the proposed Notice of Acceptance as submitted and reviewed.*

2. NEW EVIDENCE SUBMITTED

A. DRAWINGS:

1. *Drawing No. 03-907, titled " Viking Shutter ", sheets 1 through 12 of 12, prepared by Knezevich A Associates, Inc., dated April 09, 2003 last revision #2 dated July 29, 2003, signed and sealed by V. J. Knezevich, P.E.*

B. TESTS:

1. *See Association's generic approval number 03-0118.*

Helmy A. Makar, P. E.
Product Control Examiner
NOA No 03-1002.01
Expiration Date: 11/13/2008
Approval Date: 11/13/2003

A.C.C. Manufacturing, LLC

NOTICE OF ACCEPTANCE: EVIDENCE SUBMITTED

C. CALCULATIONS:

1. *See Association's generic approval number 03-0118.*

D. QUALITY ASSURANCE

1. *By Miami-Dade County Building Code Compliance Office.*

E. MATERIAL CERTIFICATION:

1. *See Association's generic approval number 03-0118.*

F. OTHERS

1. *Letter from Knezevich & Associates, Inc. dated September 11, 2003, signed by V. John Knezevich, P.E. stating that the drawing No. 03-907 for A.C.C. Manufacturing, LLC is identical to the southern Shutter Association approved drawing No. 03-258 except the title block's information.*

Helmy A. Makar, P. E.
Product Control Examiner
NOA No 03-1002.01
Expiration Date: 11/13/2008
Approval Date: 11/13/2003

Print Information: \\hurricane\ka\CADD\Associations\SSA\Acc\03-907\R2-sub\03-907-01.dwg MCantu 09/11/2003 10:01:34am 09/11/03 09:56

GENERAL NOTES:

1. THESE APPROVAL DOCUMENTS REPRESENT A SHUTTER SYSTEM ANALYZED WITH THE PROVISION SET FOR THE ISSUANCE OF A NOTICE OF ACCEPTANCE (NOA) BY MIAMI-DADE COUNTY PRODUCT CONTROL DIVISION FOR THE HIGH VELOCITY HURRICANE ZONE (HVHZ) OF THE FLORIDA BUILDING CODE.
2. AN ALLOWABLE STRESS INCREASE HAS NOT BEEN USED IN THE DESIGN OF THIS PRODUCT, EXCEPT FOR WOOD ANCHOR ANALYSIS. A LOAD DURATION FACTOR (CD= 1.33) HAS BEEN USED PER THE PROVISIONS OF CHAPTER 16 OF THE FLORIDA BUILDING CODE (FBC) AND THE NATIONAL DESIGN STANDARD (NDS) FOR WIND LOADS AND LOAD COMBINATIONS WITH WIND.
3. DETERMINE THE POSITIVE AND NEGATIVE DESIGN LOADS TO USE WHEN REFERENCING THESE DOCUMENTS IN ACCORDANCE WITH THE GOVERNING CODE AND GOVERNING WIND VELOCITY. FOR WIND LOAD CALCULATIONS IN ACCORDANCE WITH ASCE 7-98, A DIRECTIONALITY FACTOR OF Kd =0.85 SHALL BE USED.
4. THESE APPROVAL DOCUMENTS ARE GENERIC AND DO NOT INCLUDE INFORMATION FOR SITE-SPECIFIC APPLICATION OF THIS SHUTTER SYSTEM.
5. THESE APPROVAL DOCUMENTS COMPLY WITH CHAPTER 61G15-23 OF THE FLORIDA ADMINISTRATIVE CODE.
6. THESE APPROVAL DOCUMENTS ARE SUITABLE TO BE APPLIED BY THE CONTRACTOR PROVIDED THE CONTRACTOR DOES NOT DEVIATE FROM THE CONDITIONS DETAILED HEREIN AND THE CONTRACTOR VERIFIES THAT THE EXISTING STRUCTURE DOES NOT DEVIATE IN EITHER FORM OR MATERIAL FROM THE STRUCTURAL SUBSTRATES DETAILED HEREIN.
7. ANY MODIFICATIONS OR ADDITIONS TO THESE APPROVAL DOCUMENTS WILL VOID THE APPROVAL DOCUMENTS.
8. WHEN THE SITE CONDITIONS DEVIATE FROM THESE APPROVAL DOCUMENTS, THE BUILDING OFFICIAL MAY ELECT ONE OF THE FOLLOWING OPTIONS:
   - A) REQUIRE THAT SITE SPECIFIC DOCUMENTS BE PREPARED, SIGNED, DATED AND SEALED BY A LICENSED ENGINEER OR REGISTERED ARCHITECT, WHICH DETAIL AND JUSTIFY THE DEVIATION. AS A CONDITION TO THE BUILDING OFFICIAL GRANTING HIS/HER APPROVAL.
   - B) REQUIRE THAT A ONE-TIME SITE SPECIFIC APPROVAL BE APPLIED FOR AND SECURED FROM THE MIAMI-DADE COUNTY PRODUCT CONTROL DIVISION.

   WHEN THE SITE CONDITION DEVIATIONS OCCUR WITHIN THE HIGH VELOCITY HURRICANE ZONE AREAS, ONLY OPTION "B" SHALL BE ACCEPTED BY THE BUILDING OFFICIAL.
9. EACH SHUTTER ASSEMBLY SHALL BE PERMANENTLY LABELED AS FOLLOWS:

   A.C.C. MANUFACTURING, LLC
   MELBOURNE, FLORIDA
   MIAMI-DADE COUNTY PRODUCT CONTROL APPROVED
10. ALL EXTRUSIONS SHOWN SHALL BE 6063-T6 ALUMINUM ALLOY, U.O.N., WITH A MINIMUM Fy OF 30.425 K.S.I.
11. ALL BOLTS AND WASHERS SHALL BE STAINLESS STEEL WITH A MINIMUM TENSILE STRENGTH OF 60 K.S.I., U.O.N. POP RIVETS SHALL BE 1/4"Ø OR 3/16"Ø 5052 ALUM. ALLOY.
12. ALL SHUTTERS SHALL HAVE A LOCKING MECHANISM CONSISTING OF THUMBSCREW OR PUSH LOCK AT CENTER OR SIDE CLOSURE.
13. TOP AND BOTTOM DETAILS MAY BE INTERCHANGED AS FIELD CONDITIONS REQUIRE.
14. FLOOR TRACKS MAY BE REMOVABLE AT NON-STACKING LOCATIONS. USE REMOVABLE ANCHORS SUCH AS POWERS CALK-IN ANCHORS.
15. ALL EXTRUSIONS CAN BE USED FOR THE 6.8 OR THE HR ACCORDION SHUTTER SYSTEMS, U.O.N.
16. THE HR ACCORDION SHUTTER SLAT HAS A BULGE @ CENTER OF SLAT TO DISTINGUISH FROM THE 6.8 ACCORDION SHUTTER SLAT.

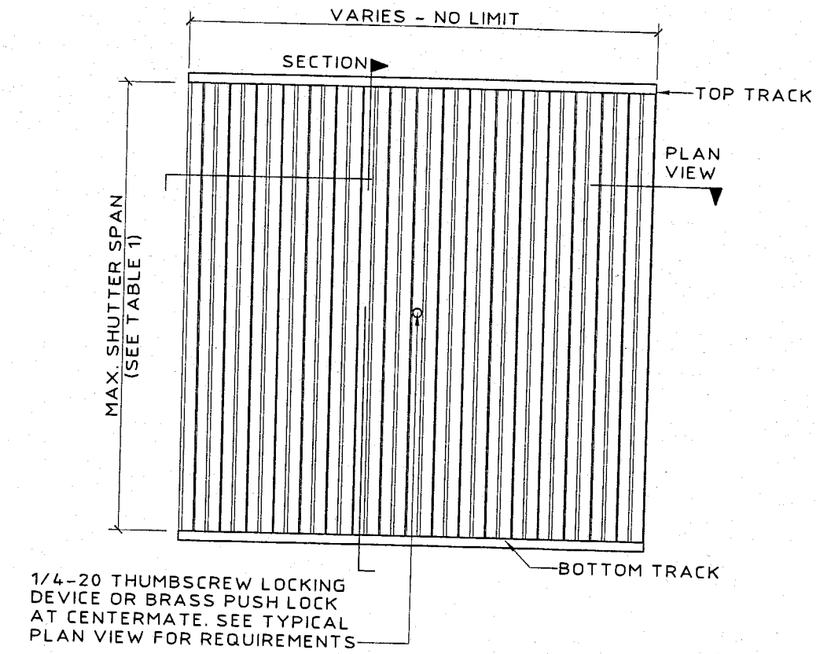

6.8 TYPICAL ELEVATION
N.T.S.

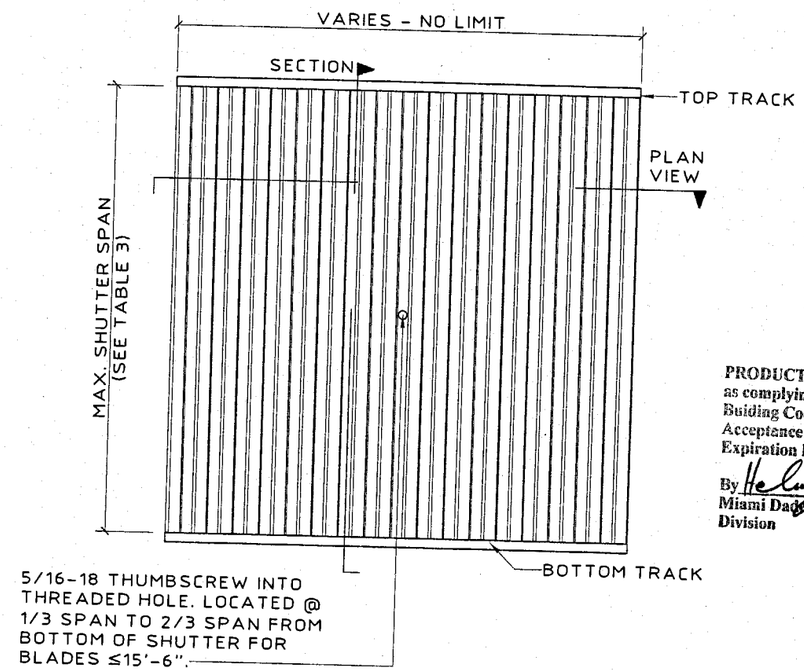

HR TYPICAL ELEVATION
N.T.S.

PRODUCT REVISED
as complying with the Florida
Building Code
Acceptance No. 03-1002.01
Expiration Date 11/13/2008
By Helena A. Ali
Miami Dade Product Control
Division

KNEZEVICH & ASSOCIATES, INC.
CONSULTING ENGINEERS • PRODUCT TESTING
1260 N. UNIVERSITY DRIVE, SUITE 180 • FORT LAUDERDALE, FL 33322
TEL: (954) 382-2800 • FAX: (954) 382-2989 • FLORIDA COA #3205
WEBSITE: WWW.KNEZEVICH.COM • E-MAIL: KA@KNEZEVICH.COM

COPYRIGHT © 2003 KNEZEVICH & ASSOCIATES, INC

6.8-HR SYSTEM LICENSED BY SOUTHERN SHUTTER ASSOCIATION

VIKING SHUTTER
A.C.C. MANUFACTURING, LLC
1300 LAKE WASHINGTON ROAD
MELBOURNE, FL 32935
(407) 752-9535

V.J. KNEZEVICH
PROFESSIONAL ENGINEER
FL License No: PE 0010983

SEP 11 2003

revisions			
no	date	by	description
1	07/08/03	DLB	COUNTY COMMENTS
2	07/29/03	DLB	GEN. NOTE 2 & DET. A ON 3

SSA I.D.# 03091103258D

date 04/09/2003	
scale AS NOTED	drawn by MCR
design by VJK	checked by VJK
drawing no. 03-907	
sheet 1 of 12	

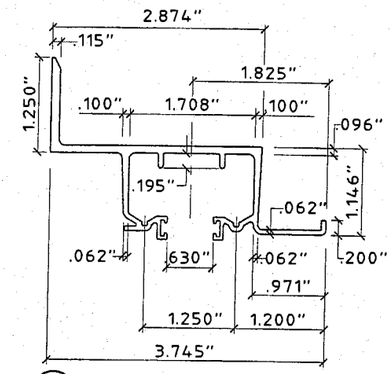

1 **WALL HEADER (6.8 ONLY)**
SCALE: HALF SIZE

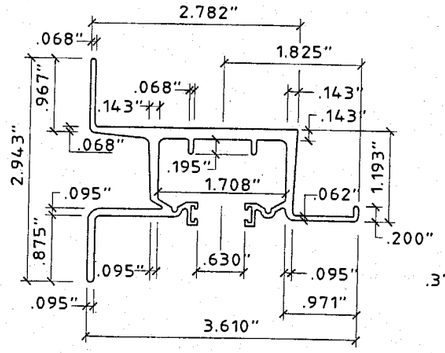

2 **WALL HEADER**
SCALE: HALF SIZE

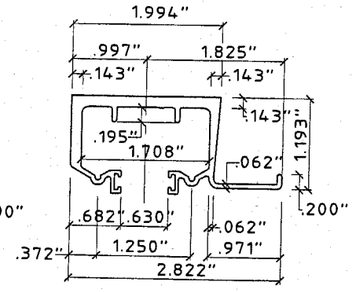

3 **HEADER**
SCALE: HALF SIZE

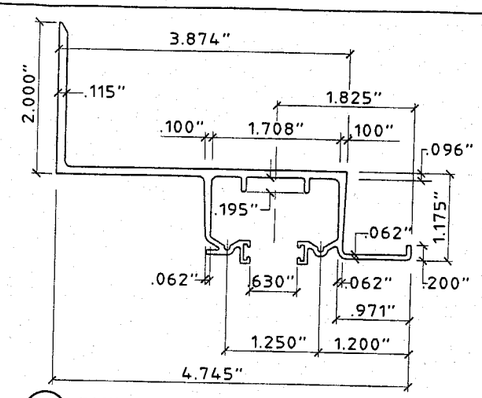

4 **BUILD OUT WALL HEADER (6.8 ONLY)**
SCALE: HALF SIZE

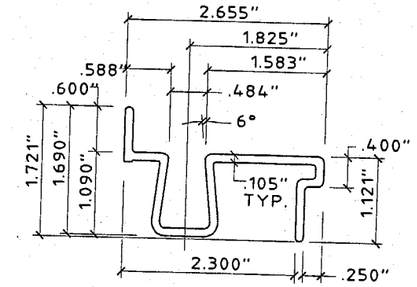

5 **BASE SILL**
SCALE: HALF SIZE

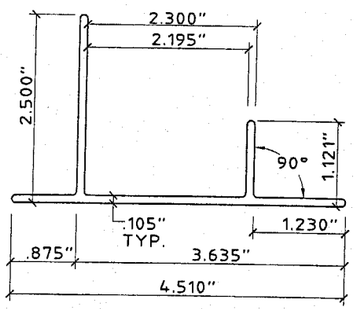

6 **BASE TRACK**
SCALE: HALF SIZE

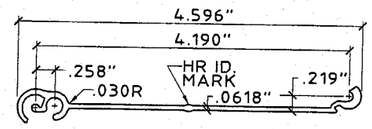

7a **TYP. HR SLAT**
SCALE: HALF SIZE

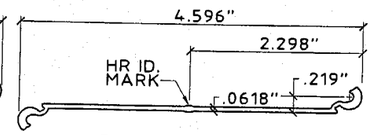

8a **ALT. HR SLAT**
SCALE: HALF SIZE

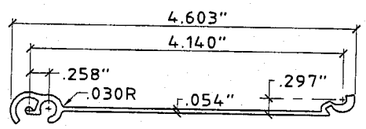

7 **TYP. 6.8 SLAT**
SCALE: HALF SIZE

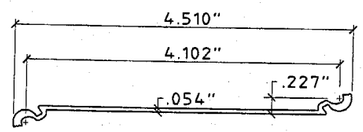

8 **ALT. 6.8 SLAT**
SCALE: HALF SIZE

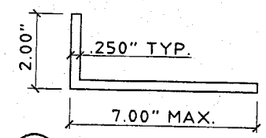

9a **ANGLE (HR ONLY)**
SCALE: 3" = 1' - 0"

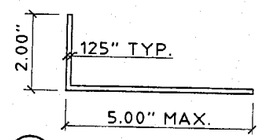

9 **ANGLE (6.8 ONLY)**
SCALE: 3" = 1' - 0"

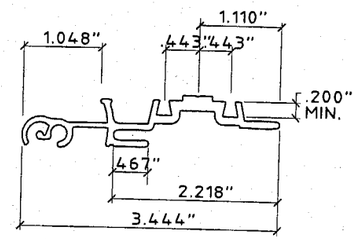

10 **(6.8 ONLY) MALE / FEMALE LOCK**
SCALE: HALF SIZE

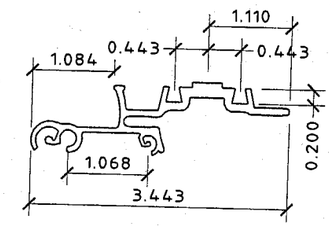

10a **(6.8 ONLY) MALE/FEMALE LOCK**
SCALE: HALF SIZE

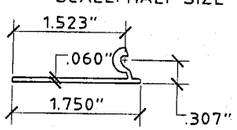

11a **HR STARTER**
SCALE: HALF SIZE

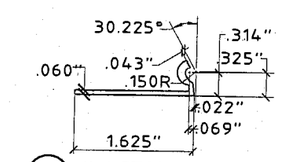

11 **6.8 STARTER**
SCALE: HALF SIZE

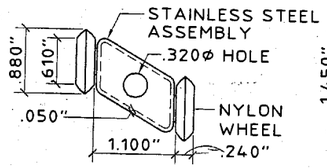

TYP. AT EVERY OTHER INSIDE JOINT AT TOP.

12 **ROLLER ASSEMBLY**
SCALE: HALF SIZE

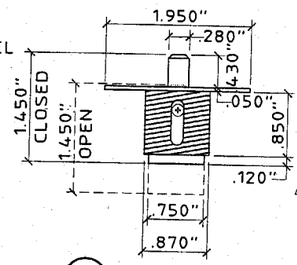

13 **BRASS PUSH LOCK**
SCALE: HALF SIZE

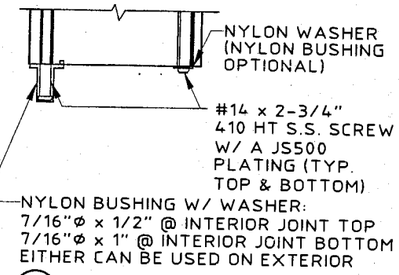

14 **BUSHING ASSEMBLY DETAIL**
SCALE: HALF SIZE

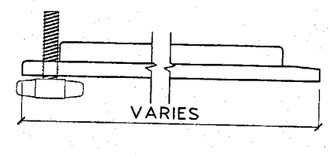

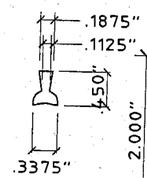

FOR 6.8 AND HR WHERE LOCK PINS ARE USED, THEY ARE ENGAGED IN THE STACKED POSITION AND ARE NOT REQ'D IN THE CLOSED POSITION.

15 **ALUMINUM OR PVC LOCK PIN (NOT REQUIRED)**
SCALE: HALF SIZE

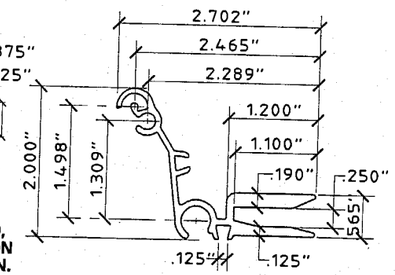

16 **CENTER MATE 1**
SCALE: HALF SIZE

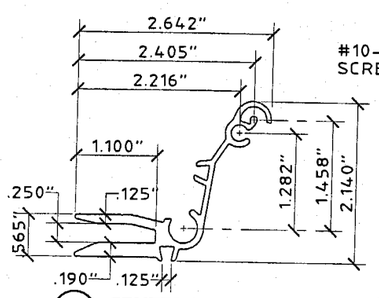

17 **CENTER MATE 2**
SCALE: HALF SIZE

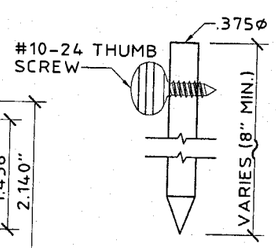

FOR USE WITH 16 AND 17 ONLY

18 **SLIDE ROD**
SCALE: HALF SIZE

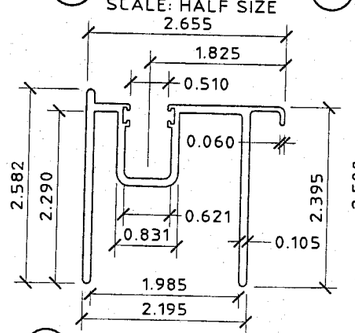

19 **ADJUSTABLE SILL**
SCALE: HALF SIZE

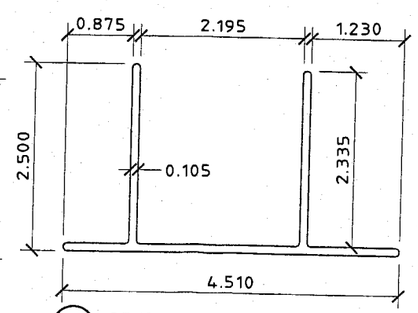

20 **ADJUSTABLE SILL BASE**
SCALE: HALF SIZE

PRODUCT REVISED
as complying with the Florida
Buiding Code
Acceptance No 03-1002.01
Expiration Date 11/13/2008
By Helmy A. Mohsen
Miami Dade Product Control
Division

KNEZEVICH & ASSOCIATES, INC.
CONSULTING ENGINEERS • PRODUCT TESTING
1260 N. UNIVERSITY DRIVE, SUITE 180 • FORT LAUDERDALE, FL 33322
TEL: (954) 382-2800 • FAX: (954) 382-2989 • FLORIDA COA #3205
WEBSITE: WWW.KNEZEVICH.COM • E-MAIL: KA@KNEZEVICH.COM

COPYRIGHT © 2003 KNEZEVICH & ASSOCIATES, INC

6.8-HR SYSTEM LICENSED BY SOUTHERN SHUTTER ASSOCIATION

VIKING SHUTTER
A.C.C. MANUFACTURING, LLC
1300 LAKE WASHINGTON ROAD
MELBOURNE, FL 32935
(407) 752-9535

V.J. KNEZEVICH
PROFESSIONAL ENGINEER
FL License No: PE 0010983

SEP 11 2003

revisions			
no	date	by	description
1	07/08/03	OLB	COUNTY COMMENTS
2	07/29/03	OLB	GEN. NOTE 2 & DET. A ON 3

SSA I.D.# 0309110325 8D

date 04/09/2003
scale AS NOTED
drawn by MCR
design by VJK
checked by VJK
drawing no. 03-907
sheet 2 of 12

Print Information: \\hurricane\ka\CADD\Associations\SSA\Acc\03-907\R2-sub\03-907-02.dwg MCantu 09/11/2003 10:01:42am 09/11/03 09:56

6.8 ACCORDION SHUTTER

NOT APPLICABLE TO HR ACCORDION SHUTTER

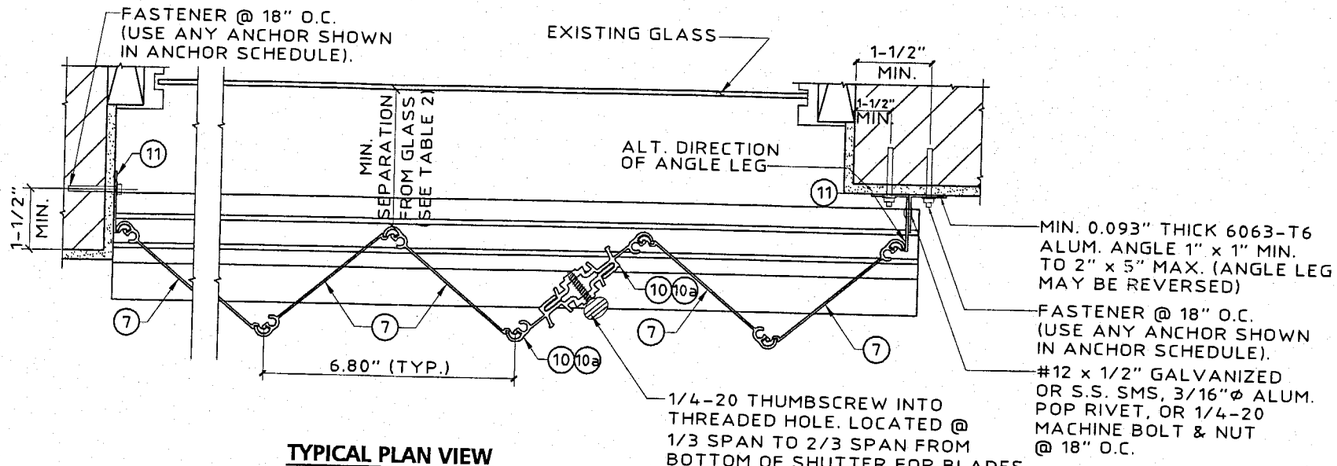

TYPICAL PLAN VIEW
SCALE: 3" = 1'-0"

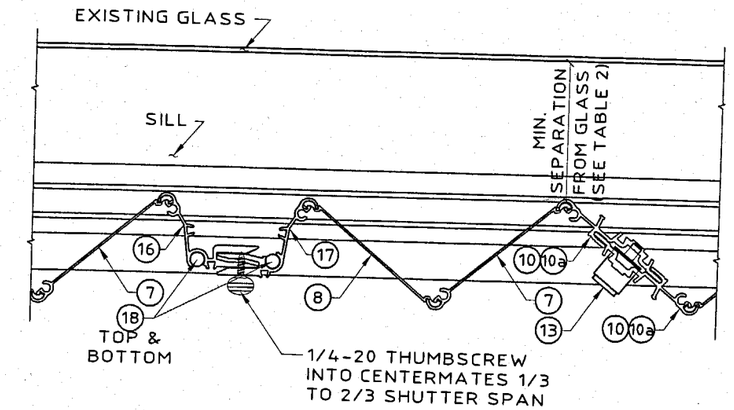

MULTIPLE SHUTTER ASSEMBLY
SCALE: 3" = 1'-0"

NOTE:
STARTER (11) LOCATION MUST BE ADJUSTED TO INSURE FULL DEPLOYMENT OF SHUTTER AND COMPLETE INTERLOCKING OF ADJACENT BLADES.

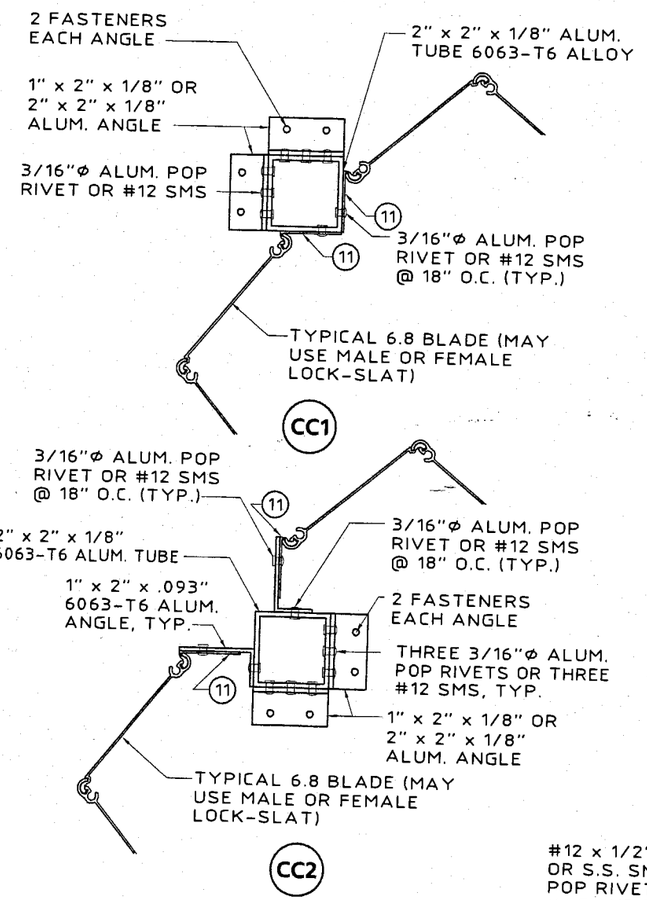

TYPICAL CORNER CLOSURE DETAILS
SCALE: 3" = 1'-0"

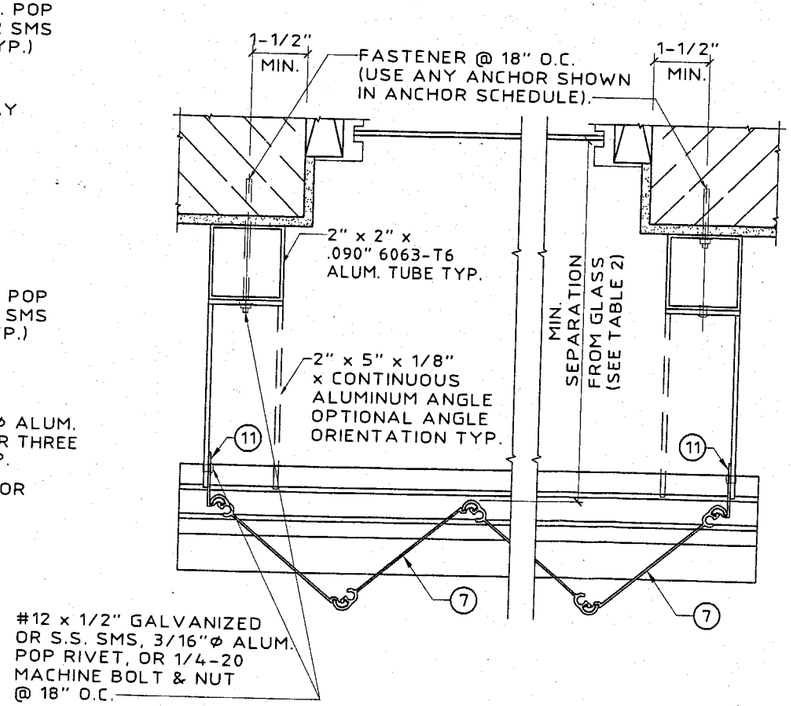

SIDE CLOSURE OPTIONS
SCALE: 3" = 1'-0"

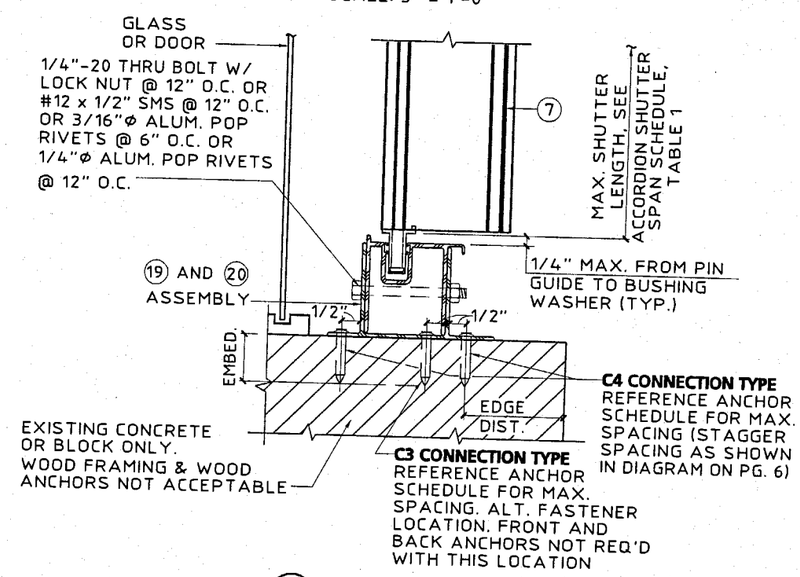

(A) **INSIDE MOUNT SECTION**
SCALE : 3"= 1'- 0"

PRODUCT REVISED
as complying with the Florida
Buiding Code
Acceptance No 03-1002.01
Expiration Date 11/13/2008
By
Miami Dade Product Control
Division

KNEZEVICH & ASSOCIATES, INC.
CONSULTING ENGINEERS • PRODUCT TESTING
1260 N. UNIVERSITY DRIVE, SUITE 180 • FORT LAUDERDALE, FL 33322
TEL: (954) 382-2800 • FAX: (954) 382-2989 • FLORIDA COA #3205
WEBSITE: WWW.KNEZEVICH.COM • E-MAIL: KA@KNEZEVICH.COM

COPYRIGHT © 2003 KNEZEVICH & ASSOCIATES, INC
6.8-HR SYSTEM LICENSED BY SOUTHERN SHUTTER ASSOCIATION

VIKING SHUTTER
A.C.C. MANUFACTURING, LLC
1300 LAKE WASHINGTON ROAD
MELBOURNE, FL 32935
(407) 752-9535

V.J. KNEZEVICH
PROFESSIONAL ENGINEER
FL License No: PE 0010983

SEP 11 2003

revisions			
no	date	by	description
1	07/08/03	OLB	COUNTY COMMENTS
2	07/29/03	OLB	GEN. NOTE 2 & DET. A ON 3

SSA I.D.# 0309110325BD

date 04/09/2003
scale AS NOTED
drawn by MCR
design by VJK
checked by VJK
drawing no. 03-907
sheet 3 of 12

Print Information: \\hurricane\ka\CADD\Associations\SSA\Acc\03-907\R2-sub\03-907-03.dwg MCantu 09/11/2003 10:01:52am 09/11/03 09:56

6.8 ACCORDION SHUTTER

NOT APPLICABLE TO HR ACCORDION SHUTTER

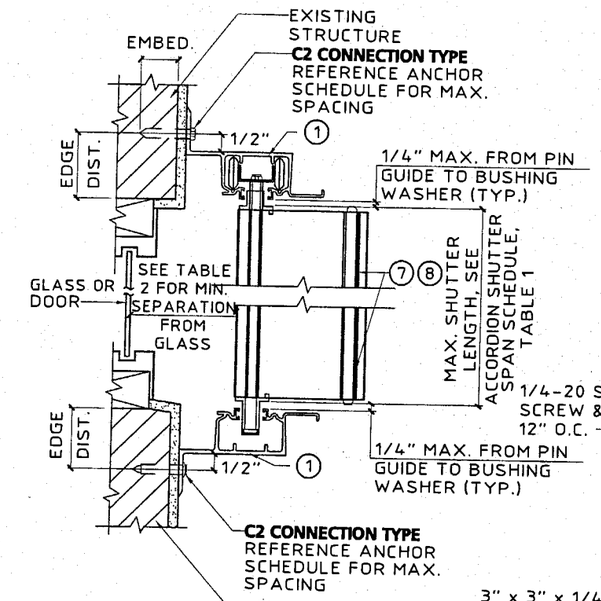

B **WALL MOUNT SECTION**
SCALE : 3"= 1'- 0"

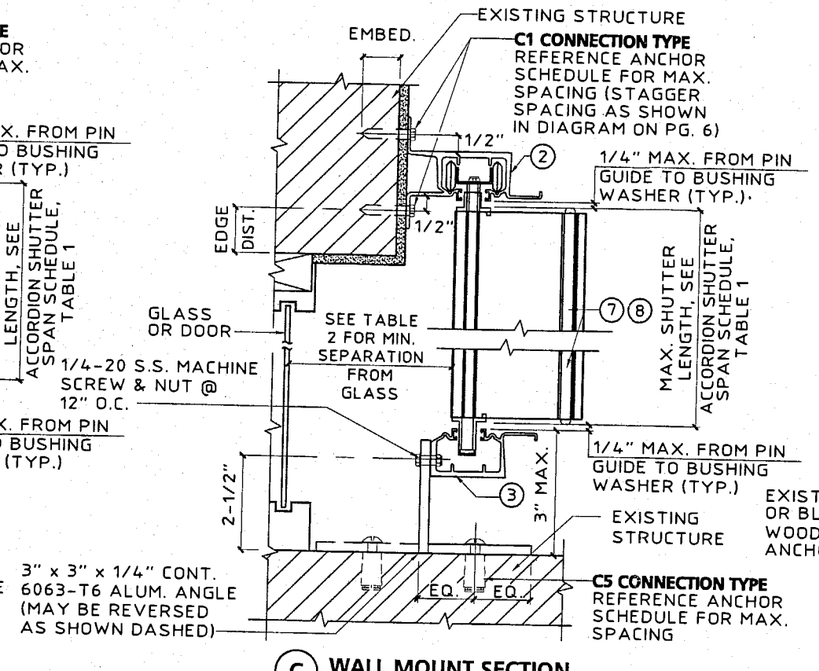

C **WALL MOUNT SECTION**
SCALE : 3"= 1'- 0"

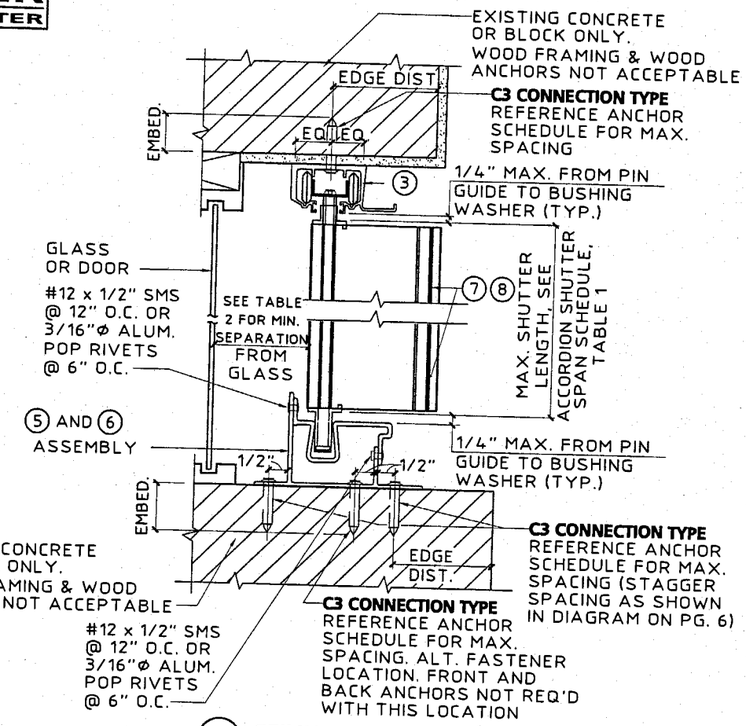

D **CEILING / INSIDE MOUNT SECTION**
SCALE : 3"= 1'- 0"

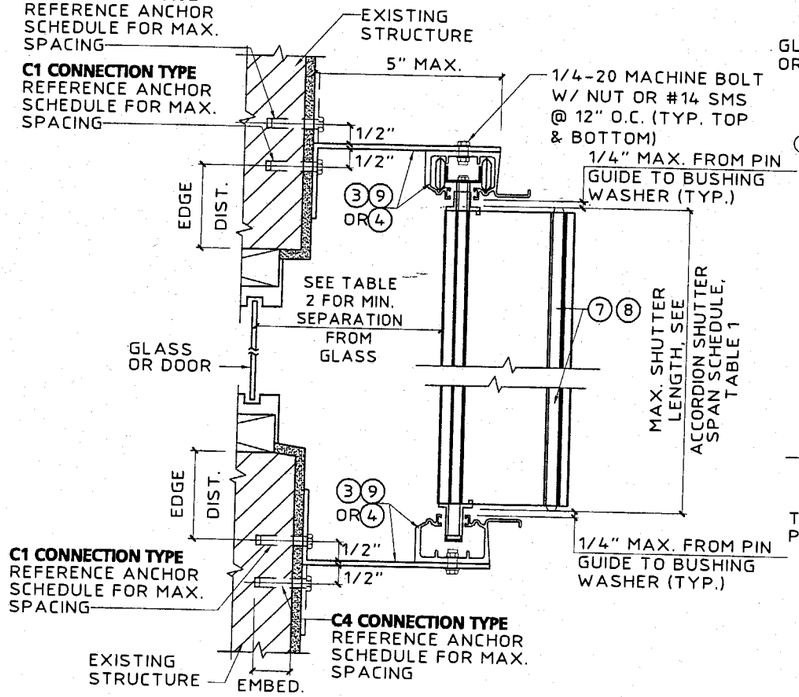

E **BUILD OUT MOUNT SECTION**
SCALE : 3"= 1'- 0"

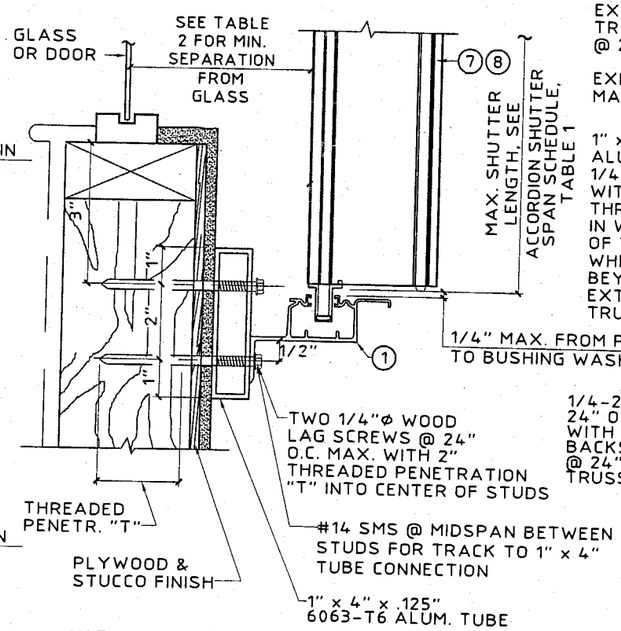

NOTE: THIS DETAIL MAY BE USED AT TOP

MAX. DESIGN LOAD = 72 P.S.F.

F **WALL MOUNT SECTION**
SCALE : 3"= 1'- 0"

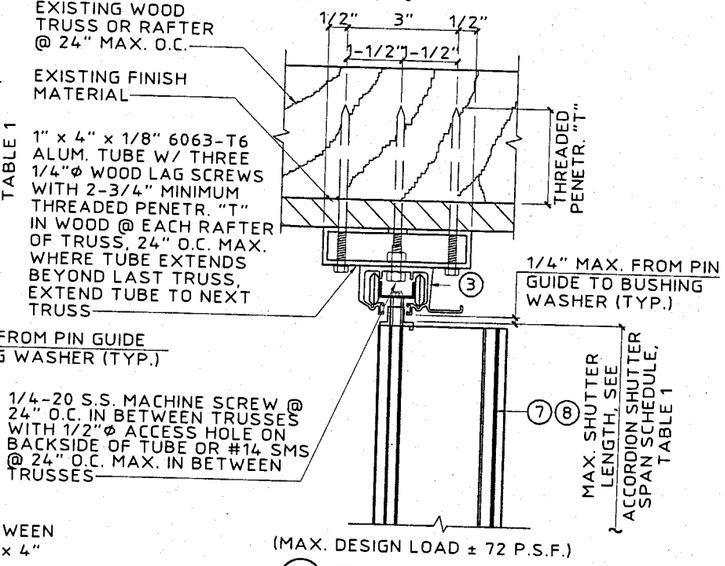

G **TRUSS MOUNT SECTION**
SCALE : 3"= 1'- 0"

PRODUCT REVISED
as complying with the Florida Building Code
Acceptance No. 03-1002.01
Expiration Date 11/13/2008
By Helena A. Melo
Miami Dade Product Control Division

KNEZEVICH & ASSOCIATES, INC.
CONSULTING ENGINEERS • PRODUCT TESTING
1260 N. UNIVERSITY DRIVE, SUITE 180 • FORT LAUDERDALE, FL 33322
TEL: (954) 382-2800 • FAX: (954) 382-2989 • FLORIDA COA #3205
WEBSITE: WWW.KNEZEVICH.COM • E-MAIL: KA@KNEZEVICH.COM

COPYRIGHT © 2003 KNEZEVICH & ASSOCIATES, INC.

6.8-HR SYSTEM LICENSED BY SOUTHERN SHUTTER ASSOCIATION

VIKING SHUTTER
A.C.C. MANUFACTURING, LLC
1300 LAKE WASHINGTON ROAD
MELBOURNE, FL 32935
(407) 752-9535

V.J. KNEZEVICH
PROFESSIONAL ENGINEER
FL License No: PE 0010983
SEP 11 2003

revisions			
no	date	by	description
1	07/08/03	OLB	COUNTY COMMENTS
2	07/29/03	OLB	GEN. NOTE 2 & DET. A ON 3

SSA I.D.# 0309110325 8D

date 04/09/2003
scale AS NOTED
drawn by MCR
design by VJK
checked by VJK
drawing no. 03-907
sheet 4 of 12

Print Information: \\hurricane\ka\CADD\Associations\SSA\Acc\03-907\R2-sub\03-907-04.dwg MCantu 09/11/2003 10:02:05am 09/11/03 09:56

6.8 ACCORDION SHUTTER

NOT APPLICABLE TO HR ACCORDION SHUTTER

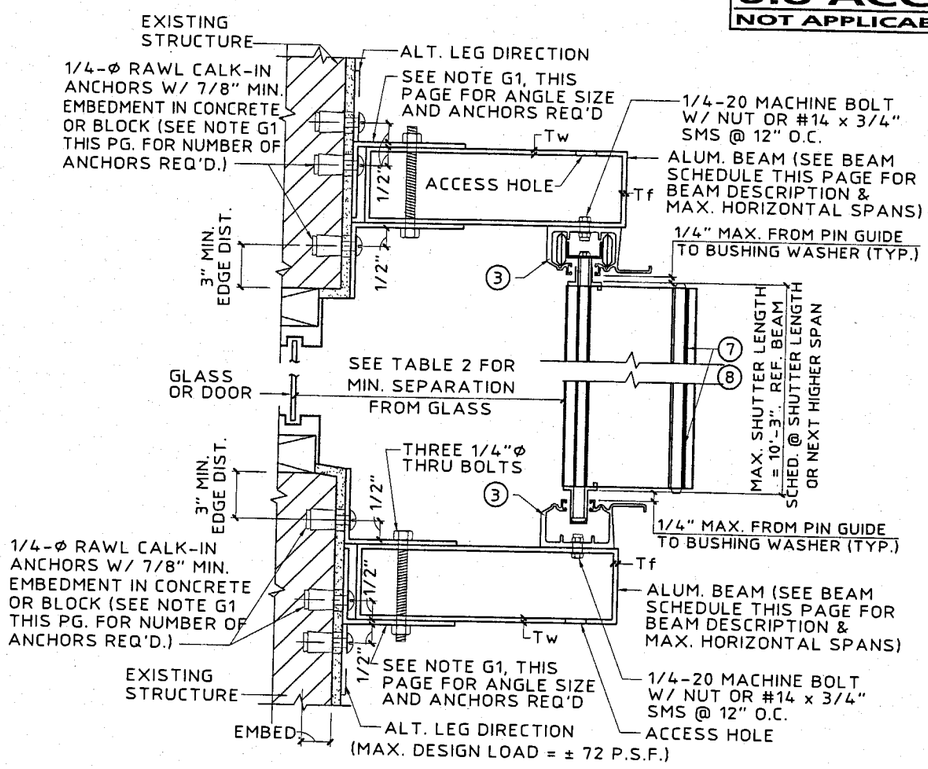

(I) BUILD-OUT MOUNT SECTION

SCALE : 3"= 1'- 0"

* BEAM SCHEDULE			
DESCRIPTION	SHUTTER SPAN	BOTTOM BEAM	TOP BEAM
2" x 5" Tw = .125" Tf = .125"	5'-0"	9'-5"	9'-0"
	8'-0"	8'-1"	8'-0"
	10'-3"	7'-4"	7'-4"
2" x 7" Tw = .072" Tf = .130"	5'-0"	11'-4"	8'-5"
	8'-0"	9'-8"	7'-6"
	10'-3"	8'-9"	7'-0"
2" x 9" Tw = .072" Tf = .224"	5'-0"	15'-5"	9'-4"
	8'-0"	13'-2"	8'-4"
	10'-3"	11'-11"	7'-9"

*USE BEAM SCHEDULE FOR DETAIL (G).

TOP & BOTTOM BEAMS MAY BE USED TOGETHER OR IN COMBINATION WITH OTHER CONNECTION DETAILS. WHERE USED TOGETHER, BEAM MUST BE LIMITED TO TOP BEAM SPANS.

NOTE G1:

2" x 3" x 1/4" 6063-T6 ALUM. ANGLE TOP & BOTTOM. FOR 2" x 5" & 2" x 7" BEAM, USE THREE 1/4"Ø POWERS CALK-IN ANCHORS @ 3" O.C. IN EACH ANGLE AND USE 8" LONG ANGLES FOR 2" x 9" BEAM, USE FOUR 1/4"Ø CALK-IN ANCHORS @ 3" O.C. IN EACH ANGLE AND USE 11" LONG ANGLES

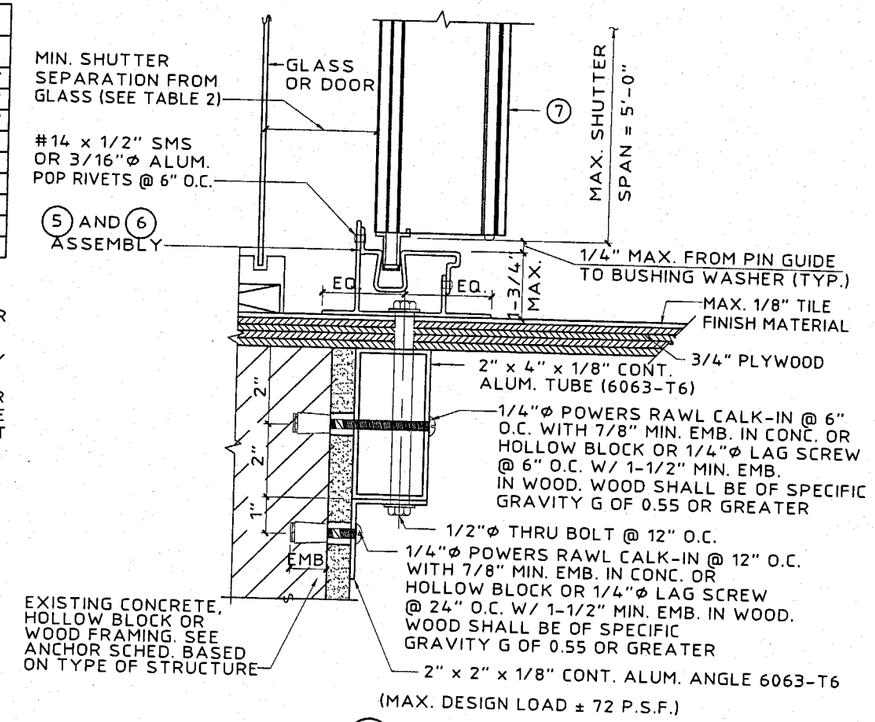

(J) PASS THRU DETAIL

SCALE : 3"= 1'- 0"

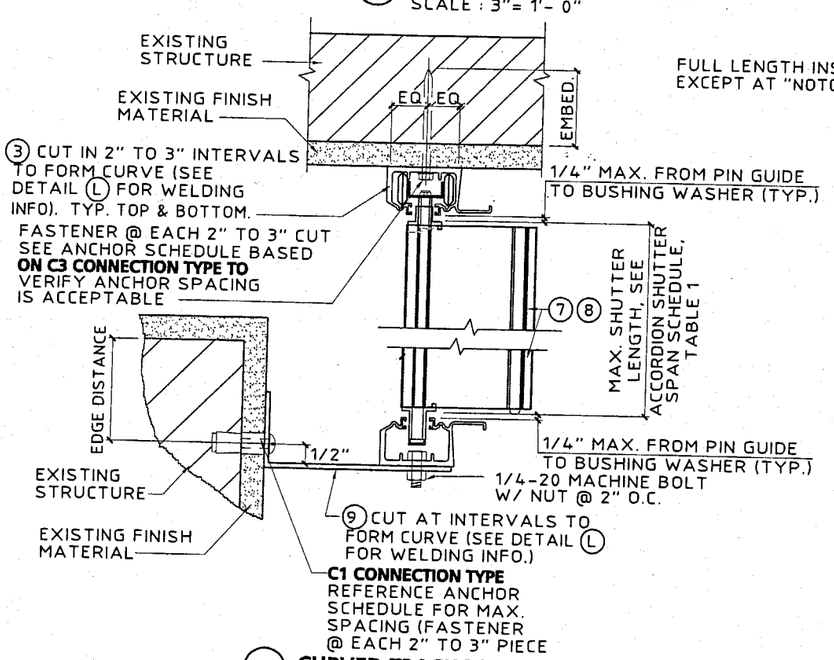

(K) CURVED TRACK DETAIL

SCALE : 3"= 1'- 0"

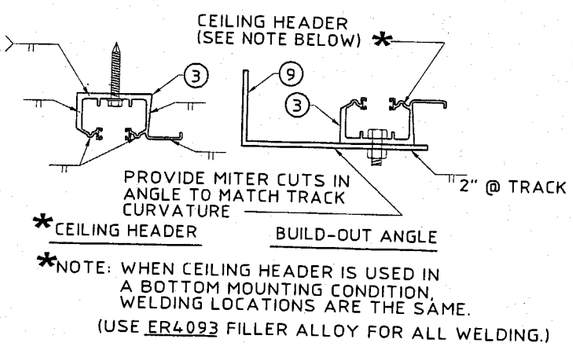

(L) WELDING DETAILS

SCALE : 3"= 1'- 0"

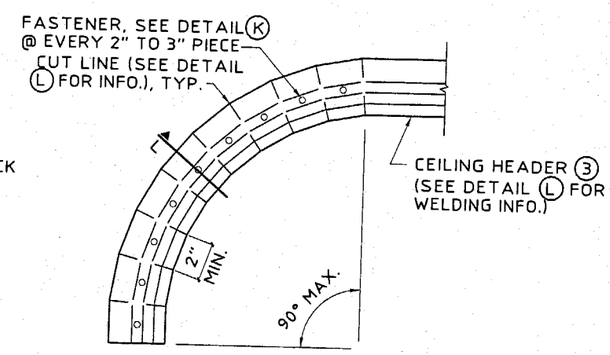

CURVED TRACK PLAN VIEW

N.T.S.

PRODUCT REVISED
as complying with the Florida Buiding Code
Acceptance No 03-1002.01
Expiration Date 11/13/2008
By Helena A. Mala
Miami Dade Product Control Division

KNEZEVICH & ASSOCIATES, INC.
CONSULTING ENGINEERS • PRODUCT TESTING
1260 N. UNIVERSITY DRIVE, SUITE 180 • FORT LAUDERDALE, FL 33322
TEL: (954) 382-2800 • FAX: (954) 382-2989 • FLORIDA COA #3205
WEBSITE: WWW.KNEZEVICH.COM • E-MAIL: KA@KNEZEVICH.COM

COPYRIGHT © 2003 KNEZEVICH & ASSOCIATES, INC

6.8-HR SYSTEM LICENSED BY SOUTHERN SHUTTER ASSOCIATION

VIKING SHUTTER

A.C.C. MANUFACTURING, LLC
1300 LAKE WASHINGTON ROAD
MELBOURNE, FL 32935
(407) 752-9535

V.J. KNEZEVICH
PROFESSIONAL ENGINEER
FL License No: PE 0010983

SEP 11 2003

revisions			
no	date	by	description
1	07/08/03	OLB	COUNTY COMMENTS
2	07/29/03	OLB	GEN. NOTE 2 & DET. A ON 3

SSA I.D.# 0309110325 8D

date 04/09/2003
scale AS NOTED
drawn by MCR
design by VJK
checked by VJK
drawing no. 03-907
sheet 5 of 12

Print Information: \\hurricane\ka\CADD\Associations\SSA\Acc\03-907\R2-sub\03-907-05.dwg MCantu 09/11/2003 10:02:17am 09/11/03 09:56

6.8 ACCORDION SHUTTER

NOT APPLICABLE TO HR ACCORDION SHUTTER

PRODUCT REVISED
as complying with the Florida Building Code
Acceptance No 03-1002.01
Expiration Date 11/13/2008
By: Miami Dade Product Control Division

ANCHOR SCHEDULE

FASTENER MAXIMUM SPACING (INCHES) REQUIRED FOR VARIOUS DESIGN LOADS AND SPANS

EXIST. STRUC.	ANCHOR TYPE	LOAD (W) P.S.F. MAX. (SEE NOTE 1)	MIN. 2" EDGE DISTANCE															MIN. 3" EDGE DISTANCE													
			SPANS UP TO 6'-0" (SEE NOTE 1)					SPANS UP TO 8'-8" (SEE NOTE 1)					SPANS UP TO 12'-9" (SEE NOTE 1)					SPANS UP TO 6'-0" (SEE NOTE 1)					SPANS UP TO 8'-8" (SEE NOTE 1)					SPANS UP TO 12'-9" (SEE NOTE 1)				
			CONNECTION TYPE (SEE NOTE 3)					CONNECTION TYPE (SEE NOTE 3)					CONNECTION TYPE (SEE NOTE 3)					CONNECTION TYPE (SEE NOTE 3)					CONNECTION TYPE (SEE NOTE 3)					CONNECTION TYPE (SEE NOTE 3)				
			C1	C2	C3	C4	C5	C1	C2	C3	C4	C5	C1	C2	C3	C4	C5	C1	C2	C3	C4	C5	C1	C2	C3	C4	C5	C1	C2	C3	C4	C5
CONCRETE	1/4"Ø ELCO TAPCON W/ 1-3/4" MIN. EMBEDMENT (MIN. 3,320 P.S.I. CONCRETE)	48.0	12	12	12	12	10	12	12	10	12	7	12	12	7	12	5	12	12	12	12	12	12	12	12	12	9	12	12	8	12	6
		62.0	12	12	11	12	8	12	12	8	12	5	11	7	5	9	3	12	12	12	12	10	12	12	10	12	7	12	9	6	12	4
		72.0	12	12	9	12	7	12	12	6	12	4	10	4	4	7	3	12	12	12	12	9	12	12	8	12	6	12	6	5	8	4
		110.0	12	12	6	12	4	9	4	4	6	3	8	3	3	4		12	12	8	12	5	12	5	5	8	4	10	4	4	6	3
		200.0	8	3	3	4		8	3	3	4		8	3	3	4		10	4	4	6	3	10	4	4	6	3	10	4	4	6	3
	* 3/8"Ø POWERS RAWL DROP-IN & 3/8"Ø STAINLESS STEEL BOLT WITH 1-9/16" MIN. EMBEDMENT (MIN. 3,000 P.S.I. CONCRETE)	48.0																12	12	12	12	12	12	12	12	12	11	12	12	11	12	8
		62.0																12	12	12	12	12	12	12	12	12	9	12	12	8	12	6
		72.0																12	12	12	12	11	12	12	10	12	7	12	8	7	11	5
		110.0																12	12	10	12	7	12	7	7	10	5	12	5	6	8	4
		200.0																12	5	6	8	4	12	5	6	8	4	12	5	6	8	4
	* 1/4"Ø ALL-POINTS SOLID-SET ANCHOR W/ 7/8" EMBED. & 1/4-20 STAINLESS STEEL MACHINE SCREW (MIN. 3,000 P.S.I. CONCRETE)	48.0	12	12	12	12	12	12	12	11	12	8	12	12	7	12	5	12	12	12	12	12	12	12	12	12	10	12	12	10	12	7
		62.0	12	12	12	12	9	12	12	8	12	6	12	8	6	10	4	12	12	12	12	12	12	12	11	12	8	12	10	7	12	5
		72.0	12	12	11	12	8	12	12	7	12	5	11	5	5	7	3	12	12	12	12	10	12	12	9	12	7	12	6	6	9	4
		110.0	12	12	7	12	5	10	5	5	7	3	9	3	4	5	3	12	12	9	12	6	12	6	6	9	4	11	4	5	6	4
		200.0	9	3	4	5	3	9	3	4	5	3	9	3	4	5	3	11	4	5	6	4	11	4	5	6	4	11	4	5	6	4
	1/4"Ø ELCO CRETE FLEX W/ 1-3/4" MIN. EMBEDMENT (MIN. 3,350 P.S.I. CONCRETE)	48.0	12	12	12	12	12	12	12	12	12	10	12	12	9	12	7	12	12	12	12	12	12	12	12	12	12	12	12	11	12	8
		62.0	12	12	12	12	11	12	12	11	12	8	12	10	7	12	5	12	12	12	12	12	12	12	12	12	9	12	11	9	12	6
		72.0	12	12	12	12	10	12	12	9	12	7	12	7	6	10	4	12	12	12	12	11	12	12	11	12	8	12	8	7	11	5
		110.0	12	12	9	12	6	12	6	6	9	4	12	4	5	7	3	12	12	10	12	7	12	7	7	10	5	12	5	6	7	4
		200.0	12	4	5	7	3	12	4	5	7	3	12	4	5	7	3	12	5	6	7	4	12	5	6	7	4	12	5	6	7	4
	5/16"Ø ITW XL TAPCON W/ 1-1/4" MIN. EMBEDMENT (MIN. 2,900 P.S.I. CONCRETE)	48.0	12	12	12	12	12	12	12	12	12	12	12	12	10	12	8	12	12	12	12	12	12	12	12	12	12	12	12	12	12	10
		62.0	12	12	12	12	12	12	12	12	12	9	12	12	8	12	6	12	12	12	12	12	12	12	12	12	12	12	12	11	12	8
		72.0	12	12	12	12	11	12	12	10	12	8	12	9	7	12	5	12	12	12	12	12	12	12	12	12	10	12	10	10	12	7
		110.0	12	12	10	12	7	12	8	6	12	5	12	6	5	9	4	12	12	12	12	10	12	10	9	12	7	12	7	8	10	6
		200.0	12	6	5	9	4	12	6	5	9	4	12	6	5	9	4	12	7	8	10	6	12	7	8	10	6	12	7	8	10	6
HOLLOW CONCRETE BLOCK	1/4"Ø ELCO TAPCON W/ 1-1/4" MIN. EMBEDMENT	48.0	12	12	8	12	5	10	10	5	10	4	6	6	4	6		12	12	10	12	7	12	12	7	12	5	8	8	5	8	3
		62.0	11	11	6	11	4	7	7	4	7	3	5	3	3	4		12	12	8	12	5	9	9	5	9	3	6	4	3	5	
		72.0	9	9	5	9	3	6	6	3	6		4			3		12	12	7	12	4	8	8	4	8	3	5		3	3	
		110.0	6	6	3	6		4					3					7	7	4	7	3	5		3	3		4				
		200.0	3					3					3					4					4					4				
	* 1/4"Ø ALL-POINTS SOLID-SET ANCHOR W/ 7/8" EMBED. & 1/4-20 STAINLESS STEEL MACHINE SCREW	48.0	12	12	11	12	8	12	12	8	12	6	12	12	5	12	4	12	12	12	12	11	12	12	10	12	7	12	12	7	12	5
		62.0	12	12	8	12	6	12	12	6	12	4	10	6	4	9	3	12	12	11	12	8	12	12	8	12	5	11	7	5	10	4
		72.0	12	12	7	12	5	12	12	5	12	4	9	4	3	6		12	12	10	12	7	12	12	7	12	5	10	5	4	7	3
		110.0	12	12	5	12	3	9	4	3	6		7	3		4		12	12	6	12	4	9	4	4	6	3	8	3	3	5	
		200.0	7	3		4		7	3		4		7	3		4		8	3	3	5		8	3	3	5		8	3	3	5	

ANCHOR SCHEDULE

FASTENER MAXIMUM SPACING (INCHES) REQUIRED FOR VARIOUS DESIGN LOADS AND SPANS

EXIST. STRUC.	ANCHOR TYPE	LOAD (W) P.S.F. MAX. (SEE NOTE 1)	MIN. 2-1/2" EDGE DISTANCE														
			SPANS UP TO 6'-0" (SEE NOTE 1)					SPANS UP TO 8'-8" (SEE NOTE 1)					SPANS UP TO 12'-9" (SEE NOTE 1)				
			CONNECTION TYPE (SEE NOTE 3)					CONNECTION TYPE (SEE NOTE 3)					CONNECTION TYPE (SEE NOTE 3)				
			C1	C2	C3	C4	C5	C1	C2	C3	C4	C5	C1	C2	C3	C4	C5
CONCRETE	1/4"Ø ITW TAPCON W/ 1-3/4" MIN. EMBEDMENT (MIN. 3,192 P.S.I. CONCRETE)	48.0	12	12	12	12	12	12	12	12	12	9	12	12	8	12	6
		62.0	12	12	12	12	10	12	12	9	12	7	12	10	6	12	5
		72.0	12	12	12	12	9	12	12	8	12	6	12	7	5	10	4
		110.0	12	12	7	12	6	12	6	5	9	4	12	4	4	7	3
		200.0	12	4	4	7	3	12	4	4	7	3	12	4	4	7	3
HOLLOW CONC. BLOCK	1/4"Ø ITW TAPCON W/ 1-1/4" MIN. EMBEDMENT	48.0	12	12	8	12	6	11	11	6	11	4	7	7	4	7	
		62.0	12	12	6	12	4	8	8	4	8	3	5	3	3	4	
		72.0	10	10	5	10	4	7	7	4	7		5			3	
		110.0	7	7	3	7		4			3		4				
		200.0	4					4					4				

ANCHOR SCHEDULE

FASTENER MAXIMUM SPACING (INCHES) REQUIRED FOR VARIOUS DESIGN LOADS AND SPANS

EXIST. STRUC.	ANCHOR TYPE	LOAD (W) P.S.F. MAX. (SEE NOTE 1)	MIN. 4" EDGE DISTANCE														
			SPANS UP TO 6'-0" (SEE NOTE 1)					SPANS UP TO 8'-8" (SEE NOTE 1)					SPANS UP TO 12'-9" (SEE NOTE 1)				
			CONNECTION TYPE (SEE NOTE 3)					CONNECTION TYPE (SEE NOTE 3)					CONNECTION TYPE (SEE NOTE 3)				
			C1	C2	C3	C4	C5	C1	C2	C3	C4	C5	C1	C2	C3	C4	C5
HOLLOW CONC. BLOCK	5/16"Ø ITW XL TAPCON W/ 1-1/4" MIN. EMBEDMENT	48.0	12	12	12	12	8	12	12	9	12	6	10	10	6	10	4
		62.0	12	12	10	12	6	11	11	7	11	4	7	4	4	6	3
		72.0	12	12	9	12	5	10	10	6	10	4	6	3	4	4	
		110.0	9	9	5	9	3	6	3	4	4		5		3	3	
		200.0	5		3	3		5		3	3		5		3	3	

ANCHOR SCHEDULE

FASTENER MAXIMUM SPACING (INCHES) REQUIRED FOR VARIOUS DESIGN LOADS AND SPANS

EXIST. STRUC.	ANCHOR TYPE	LOAD (W) P.S.F. MAX. (SEE NOTE 1)	MIN. 3/4" EDGE DISTANCE														
			SPANS UP TO 6'-0" (SEE NOTE 1)					SPANS UP TO 8'-8" (SEE NOTE 1)					SPANS UP TO 12'-9" (SEE NOTE 1)				
			CONNECTION TYPE (SEE NOTE 3)					CONNECTION TYPE (SEE NOTE 3)					CONNECTION TYPE (SEE NOTE 3)				
			C1	C2	C3	C4	C5	C1	C2	C3	C4	C5	C1	C2	C3	C4	C5
WOOD	T≥1-3/4" 1/4"Ø WOOD LAG SCREW W/ MIN. 1-3/4" THREADED PENETRATION "T" SHEAR PARALLEL OR PERPENDICULAR TO WOOD GRAIN	48.0	12	12	12	12	10	12	12	8	12	7	12	12	5	12	4
		62.0	12	12	9	12	7	12	12	6	12	5	12	12	4	12	3
		72.0	12	12	8	12	6	12	12	5	12	4	12	8	3	11	3
		110.0	12	12	5	12	4	12	7	3	10	3	12	5	3	8	
		200.0	12	5	3	8		12	5	3	8		12	5	3	8	
	* 7/16"Ø WOOD BUSHING W/ 7/8" MIN. EMBEDMENT STAINLESS STEEL STEEL MACHINE SCREW	48.0	12	12		12		11	11		11		7	7		7	
		62.0	12	12		12		9	9		9		6	3		5	
		72.0	11	11		11		7	7		7		5			3	
		110.0	7	7		7		5			3		4				
		200.0	4					4					4				

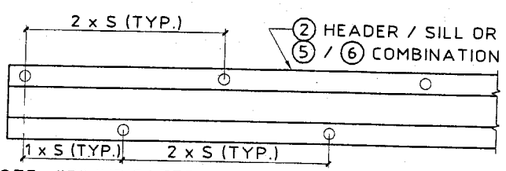

NOTE: "S" INDICATES ANCHOR SCHEDULE SPACING.

ANCHOR NOTES:

1. SPANS AND LOADS SHOWN HERE ARE FOR DETERMINING ANCHOR SPACING ONLY. ALLOWABLE STORM SHUTTER SPANS FOR SPECIFIC LOADS MUST BE LIMITED TO THOSE SHOWN IN TABLE 1.
2. REFERENCE SHEET 11 FOR NOTES 2 THRU 10.

SPACING DIAGRAM FOR:

- C1 CONNECTION TYPE USING PIECE ②
- C3 CONNECTION TYPE USING PIECE ⑥ WITH OUTSIDE ANCHORS
- APPLICABLE TO 6.8 SYSTEM ONLY

KNEZEVICH & ASSOCIATES, INC.
CONSULTING ENGINEERS • PRODUCT TESTING
1260 N. UNIVERSITY DRIVE, SUITE 180 • FORT LAUDERDALE, FL 33322
TEL: (954) 382-2800 • FAX: (954) 382-2989 • FLORIDA COA #3205
WEBSITE: WWW.KNEZEVICH.COM • E-MAIL: KA@KNEZEVICH.COM

COPYRIGHT © 2003 KNEZEVICH & ASSOCIATES, INC

6.8-HR SYSTEM LICENSED BY SOUTHERN SHUTTER ASSOCIATION

VIKING SHUTTER
A.C.C. MANUFACTURING, LLC
1300 LAKE WASHINGTON ROAD
MELBOURNE, FL 32935
(407) 752-9535

V.J. KNEZEVICH
PROFESSIONAL ENGINEER
FL License No: PE 0010983

SEP 11 2003

revisions			
no	date	by	description
1	07/08/03	OLB	COUNTY COMMENTS
2	07/29/03	OLB	GEN. NOTE 2 & DET. A ON 3

SSA I.D.# 0309110325 8D

date 04/09/2003
scale AS NOTED
drawn by MCR
design by VJK
checked by VJK
drawing no. 03-907
sheet 6 of 12

Print Information: \\hurricane\ka\CADD\Associations\SSA\Acc\03-907\R2-sub\03-907-06.dwg MCantu 09/11/2003 10:02:43am 09/11/03 09:56

6.8 ACCORDION SHUTTER

NOT APPLICABLE TO HR ACCORDION SHUTTER

TABLE 2 — MINIMUM SHUTTER SEPARATION FROM GLASS

POSITIVE DESIGN LOAD (W) (P.S.F.)	ACTUAL SHUTTER SPAN (L) (FT – IN)	MIN. SEPARATION FROM GLASS FOR INSTALLATIONS LESS THAN OR EQUAL TO 30' ABOVE GRADE (IN.)	MIN. SEPARATION FROM GLASS FOR INSTALLATIONS GREATER THAN 30' ABOVE GRADE (IN.)
40.0	8-3	3-1/8	1-5/8
	10-0	3-3/4	2-1/8
	11-11	3-3/4	3
50.0	8-3	3-1/8	1-3/4
	10-0	3-3/4	2-3/8
	11-3	3-3/4	3
60.0	5-0	3-1/8	1-1/4
	8-3	3-1/8	1-7/8
	10-9	3-3/4	3
70.0	5-0	3-1/8	1-1/8
	8-3	3-1/8	1-7/8
	10-4	3-3/4	3
80.0	6-0	3-1/8	1-3/8
	8-3	3-1/8	2-1/8
	9-4	3-3/4	2-5/8
90.0	5-0	3-1/8	1-3/8
	7-0	3-1/8	1-5/8
	8-3	3-1/8	2-1/8
100.0	5-0	3-1/8	1-3/8
	7-0	3-1/8	1-3/4
	8-3	3-1/8	2-1/4
110.0	5-0	3-1/8	1-3/8
	7-0	3-1/8	1-7/8
	8-3	3-1/8	2-3/8
120.0	5-0	3-1/8	1-3/8
	7-0	3-1/8	1-7/8
	8-3	3-1/8	2-1/4
130.0	5-0	3-1/8	1-3/8
	7-0	3-1/8	1-7/8
	8-3	3-1/8	2-1/2

TABLE 1 NOTES:

1. DETERMINE BOTH THE POSITIVE AND THE NEGATIVE WIND LOADS. CHECK THEIR RESPECTIVE SPANS AND USE THE LESSER VALUE OF THE TWO.
2. FOR DESIGN LOADS BETWEEN TABULATED VALUES USE NEXT HIGHER LOAD OR LINEAR INTERPOLATION MAY BE USED TO DETERMINE ALLOWABLE SPANS.

TABLE 2 NOTE:

1. ENTER TABLE 2 WITH POSITIVE DESIGN LOAD TO DETERMINE MIN. STORM SHUTTER SEPARATION FROM GLASS.

TABLE 1 — ACCORDION SHUTTER SPAN SCHEDULE FOR ALL MOUNTING CONDITIONS

DESIGN WIND LOAD W (P.S.F.)	POSITIVE WIND LOAD	NEGATIVE WIND LOAD
	L max. (FT – IN)	L max. (FT – IN)
30.0	12-9	12-9
35.0	12-4	12-9
40.0	11-11	12-9
45.0	11-7	12-9
50.0	11-3	12-9
55.0	11-0	12-9
60.0	10-9	12-4
65.0	10-6	11-6
70.0	10-4	10-8
72.0	10-3	10-4
75.0	10-2	9-11
80.0	9-11	9-4
90.0	9-7	8-4
100.0	9-3	8-3
110.0	9-0	8-3
120.0	8-8	8-3
130.0	8-4	8-3
133.0	8-3	8-3
140.0	7-11	7-11
150.0	7-5	7-5
160.0	6-11	6-11
170.0	6-6	6-6
180.0	6-2	6-2
190.0	5-10	5-10
200.0	5-6	5-6

PRODUCT REVISED
as complying with the Florida
Buiding Code
Acceptance No. 03-1002.01
Expiration Date 11/13/2008
By
Miami Dade Product Control
Division

KNEZEVICH & ASSOCIATES, INC.
CONSULTING ENGINEERS • PRODUCT TESTING
1260 N. UNIVERSITY DRIVE, SUITE 180 • FORT LAUDERDALE, FL 33322
TEL: (954) 382-2800 • FAX: (954) 382-2989 • FLORIDA COA #3205
WEBSITE: WWW.KNEZEVICH.COM • E-MAIL: KA@KNEZEVICH.COM

COPYRIGHT © 2003 KNEZEVICH & ASSOCIATES, INC.

6.8-HR SYSTEM LICENSED BY SOUTHERN SHUTTER ASSOCIATION

VIKING SHUTTER
A.C.C. MANUFACTURING, LLC
1300 LAKE WASHINGTON ROAD
MELBOURNE, FL 32935
(407) 752-9535

V.J. KNEZEVICH
PROFESSIONAL ENGINEER
FL License No. PE 0010983

SEP 11 2003

revisions			
no	date	by	description
1	07/08/03	OLB	COUNTY COMMENTS
2	07/29/03	OLB	GEN. NOTE 2 & DET. A ON 3

SSA I.D.# 0309110325 8D

date 04/09/2003
scale AS NOTED
drawn by MCR
design by VJK
checked by VJK
drawing no. 03-907
sheet 7 of 12

Print Information: \\hurricane\ka\CADD\Associations\SSA\Acc\03-907\R2-sub\03-907-07.dwg MCantu 09/11/2003 10:02:50am 09/11/03 09:56

HR ACCORDION SHUTTER

NOT APPLICABLE TO 6.8 ACCORDION SHUTTER

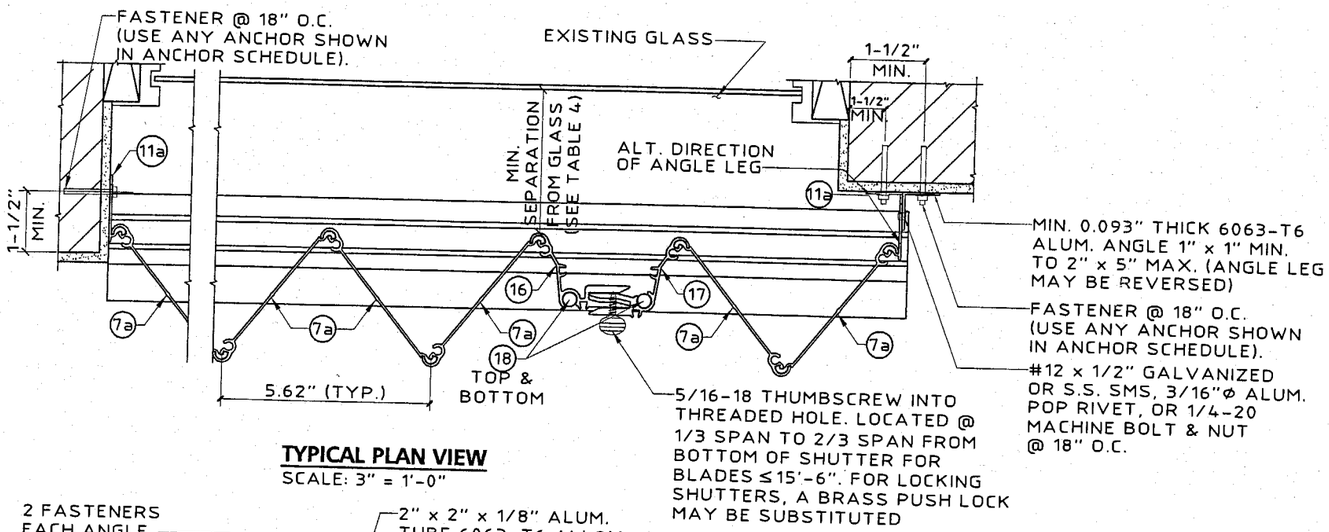

TYPICAL PLAN VIEW
SCALE: 3" = 1'-0"

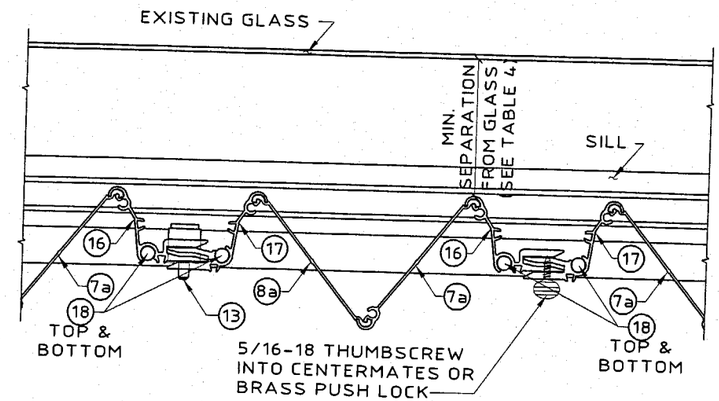

MULTIPLE SHUTTER ASSEMBLY
SCALE: 3" = 1'-0"

NOTE:
STARTER (11a) LOCATION MUST BE ADJUSTED TO INSURE FULL DEPLOYMENT OF SHUTTER AND COMPLETE INTERLOCKING OF ADJACENT BLADES.

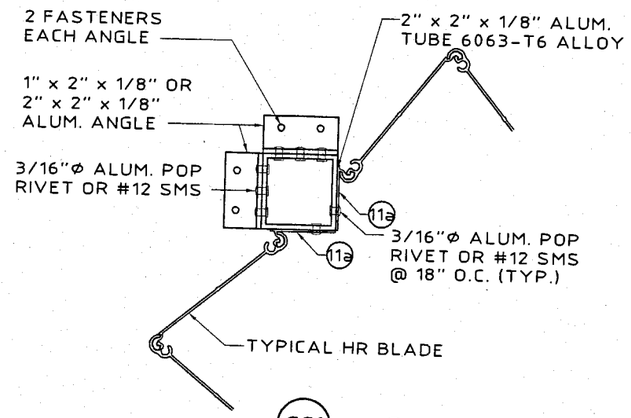

CC1

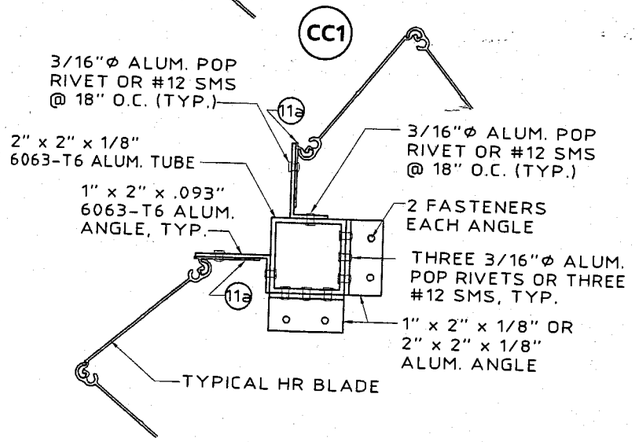

CC2

TYPICAL CORNER CLOSURE DETAILS
SCALE: 3" = 1'-0"

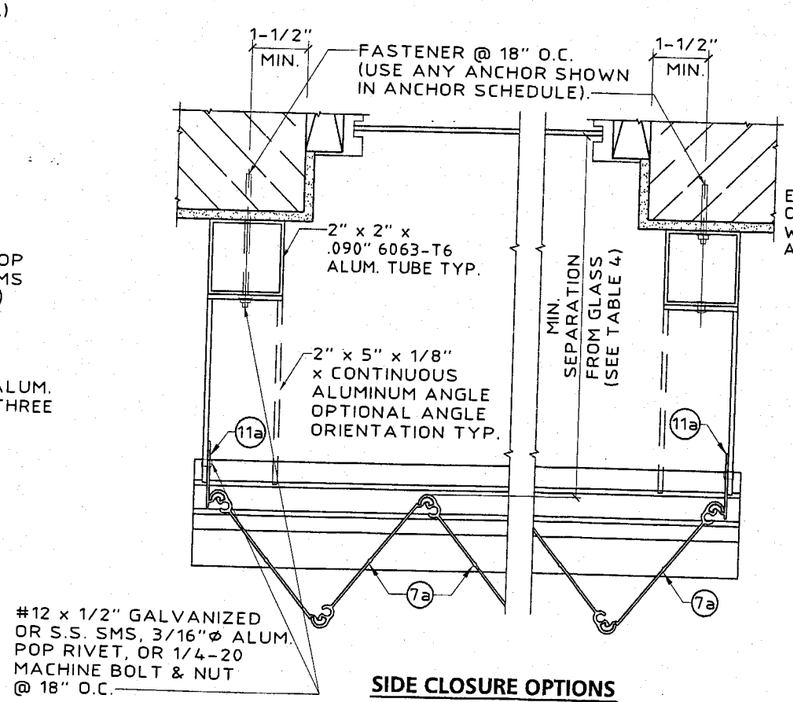

SIDE CLOSURE OPTIONS
SCALE: 3" = 1'-0"

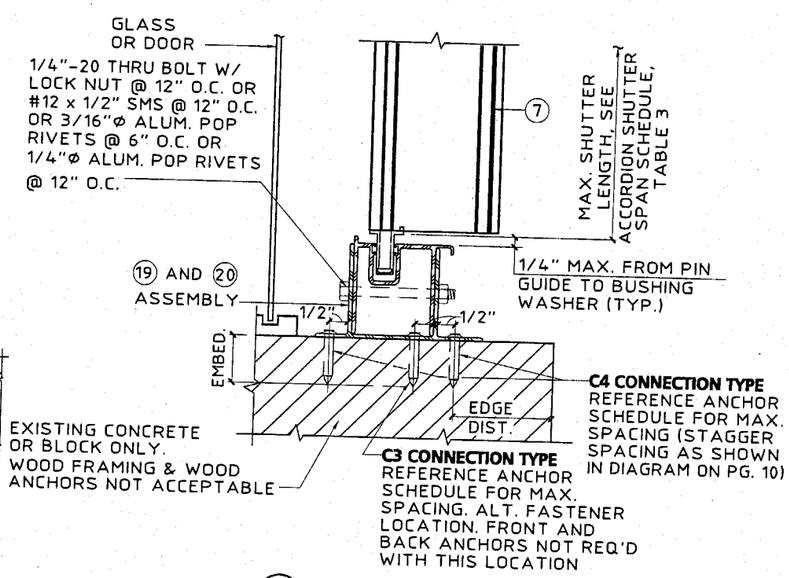

(M) INSIDE MOUNT SECTION
SCALE : 3"= 1'- 0"

PRODUCT REVISED
as complying with the Florida Buiding Code
Acceptance No 03-1002.01
Expiration Date 11/13/2008
By Helena A. Molina
Miami Dade Product Control Division

KNEZEVICH & ASSOCIATES, INC.
CONSULTING ENGINEERS • PRODUCT TESTING
1260 N. UNIVERSITY DRIVE, SUITE 180 • FORT LAUDERDALE, FL 33322
TEL: (954) 382-2800 • FAX: (954) 382-2989 • FLORIDA COA #3205
WEBSITE: WWW.KNEZEVICH.COM • E-MAIL: KA@KNEZEVICH.COM

COPYRIGHT © 2003 KNEZEVICH & ASSOCIATES, INC.

6.8-HR SYSTEM LICENSED BY SOUTHERN SHUTTER ASSOCIATION

VIKING SHUTTER
A.C.C. MANUFACTURING, LLC
1300 LAKE WASHINGTON ROAD
MELBOURNE, FL 32935
(407) 752-9535

V.J. KNEZEVICH
PROFESSIONAL ENGINEER
FL License No. PE 0010983

SEP 11 2003

revisions			
no	date	by	description
1	07/08/03	OLB	COUNTY COMMENTS
2	07/29/03	OLB	GEN. NOTE 2 & DET. A ON 3

SSA I.D.# 0309110325 8D

date 04/09/2003
scale AS NOTED
drawn by MCR
design by VJK
checked by VJK
drawing no. 03-907
sheet 8 of 12

Print Information: \\hurricane\ka\CADD\Associations\SSA\Acc\03-907\R2-sub\03-907-08.dwg MCantu 09/11/2003 10:03:00am 09/11/03 09:56

HR ACCORDION SHUTTER

NOT APPLICABLE TO 6.8 ACCORDION SHUTTER

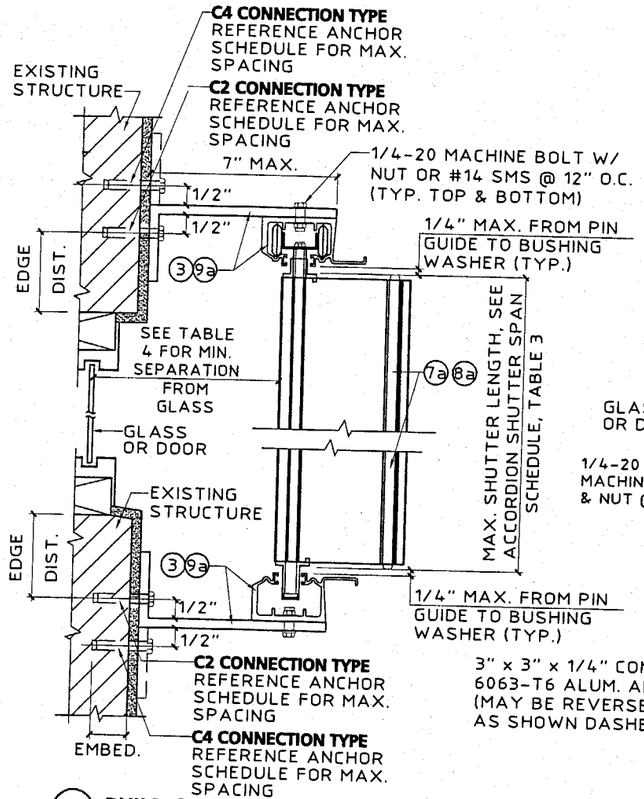

N BUILD OUT MOUNT SECTION
SCALE : 3"= 1'- 0"

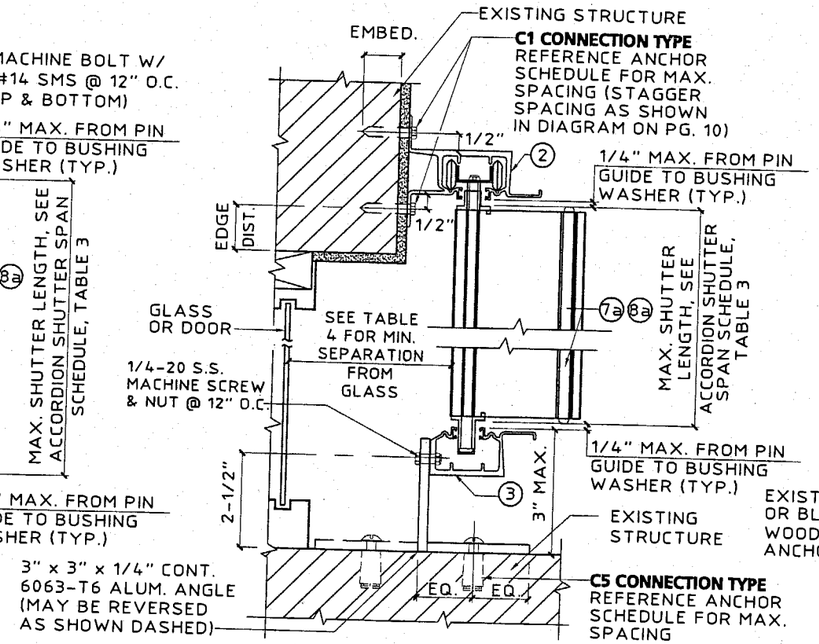

O WALL MOUNT SECTION
SCALE : 3"= 1'- 0"

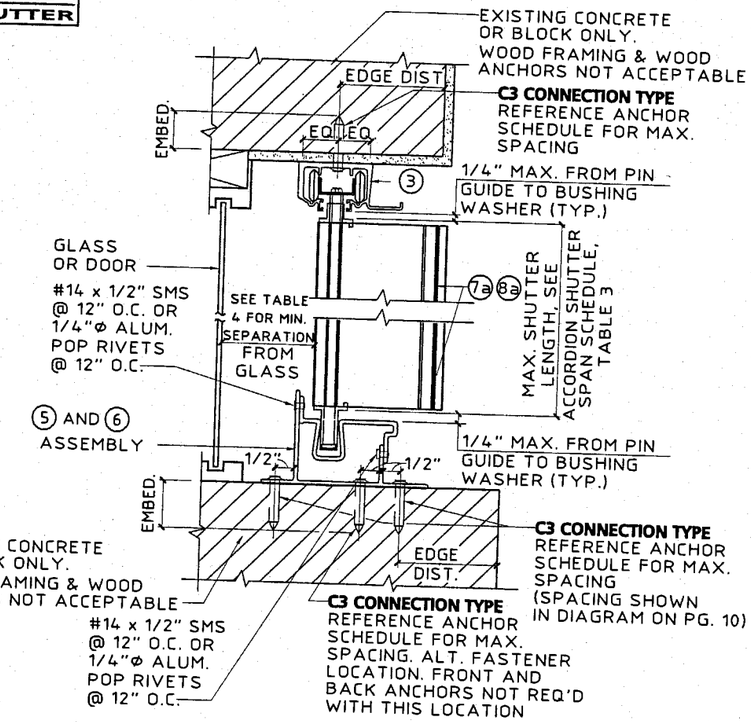

P CEILING / INSIDE MOUNT SECTION
SCALE : 3"= 1'- 0"

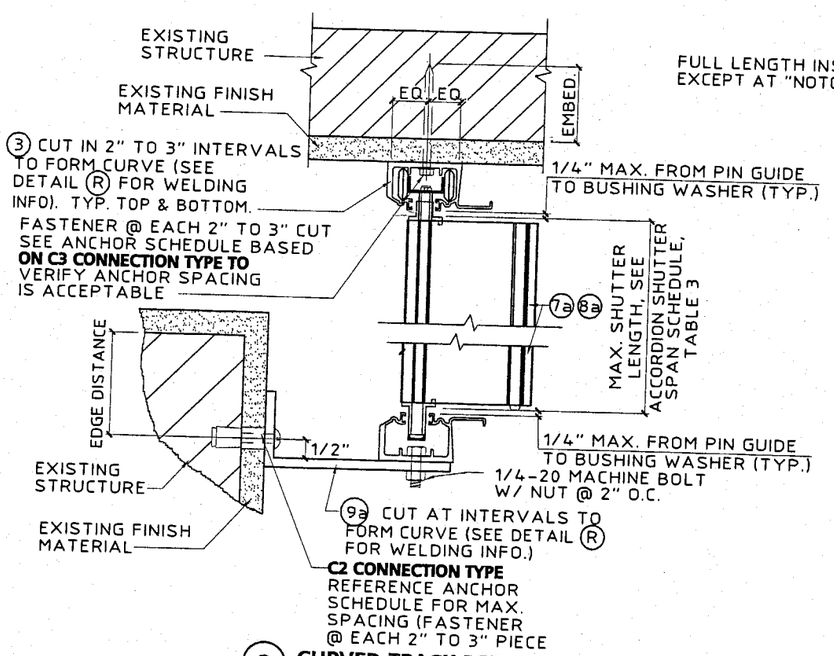

Q CURVED TRACK DETAIL
SCALE : 3"= 1'- 0"

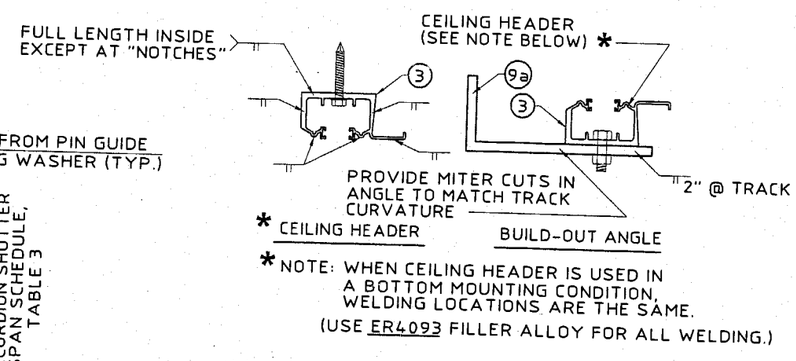

R WELDING DETAILS
SCALE : 3"= 1'- 0"

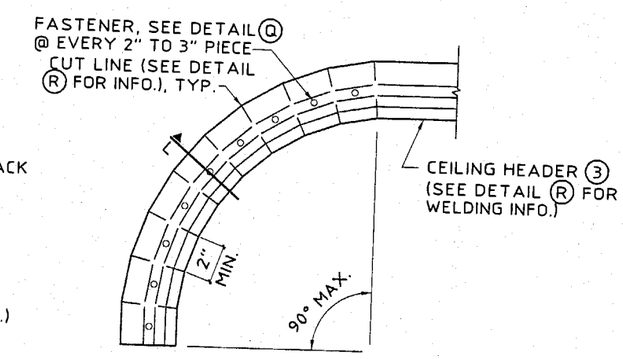

CURVED TRACK PLAN VIEW
N.T.S.

PRODUCT REVISED
as complying with the Florida
Buiding Code
Acceptance No 03-1002.01
Expiration Date 11/13/2008
By Helmy A. Meler
Miami Dade Product Control
Division

KNEZEVICH & ASSOCIATES, INC.
CONSULTING ENGINEERS • PRODUCT TESTING
1260 N. UNIVERSITY DRIVE, SUITE 180 • FORT LAUDERDALE, FL 33322
TEL: (954) 382-2800 • FAX: (954) 382-2989 • FLORIDA COA #3205
WEBSITE: WWW.KNEZEVICH.COM • E-MAIL: KA@KNEZEVICH.COM

COPYRIGHT © 2003 KNEZEVICH & ASSOCIATES, INC

6.8-HR SYSTEM LICENSED BY SOUTHERN SHUTTER ASSOCIATION

VIKING SHUTTER
A.C.C. MANUFACTURING, LLC
1300 LAKE WASHINGTON ROAD
MELBOURNE, FL 32935
(407) 752-9535

V.J. KNEZEVICH
PROFESSIONAL ENGINEER
FL License No: PE 0010983
SEP 11 2003

revisions			
no	date	by	description
1	07/08/03	OLB	COUNTY COMMENTS
2	07/29/03	OLB	GEN. NOTE 2 & DET. A ON 3

SSA I.D.# 0309110325 8D

date 04/09/2003
scale AS NOTED
drawn by MCR
design by VJK
checked by VJK
drawing no. 03-907
sheet 9 of 12

Print Information: \\hurricane\ka\CADD\Associations\SSA\Acc\03-907\R2-sub\03-907-09.dwg MCantu 09/11/2003 10:03:11am 09/11/03 09:56

HR ACCORDION SHUTTER

NOT APPLICABLE TO 6.8 ACCORDION SHUTTER

ANCHOR SCHEDULE

FASTENER MAXIMUM SPACING (INCHES) REQUIRED FOR VARIOUS DESIGN LOADS AND SPANS

MIN. 2" EDGE DISTANCE

EXIST. STRUC.	ANCHOR TYPE	LOAD (W) P.S.F. MAX. (SEE NOTE 1)	SPANS UP TO 6'-0" (SEE NOTE 1) CONNECTION TYPE (SEE NOTE 3)					SPANS UP TO 8'-8" (SEE NOTE 1) CONNECTION TYPE (SEE NOTE 3)					SPANS UP TO 10'-2" (SEE NOTE 1) CONNECTION TYPE (SEE NOTE 3)					SPANS UP TO 15'-6" (SEE NOTE 1) CONNECTION TYPE (SEE NOTE 3)				
			C1	C2	C3	C4	C5	C1	C2	C3	C4	C5	C1	C2	C3	C4	C5	C1	C2	C3	C4	C5
CONCRETE	1/4"ø ELCO TAPCON W/ 1-3/4" MIN. EMBEDMENT (MIN. 3,320 P.S.I. CONCRETE)	75.0	12	12	9	12	6	12	12	6	12	4	12	12	5	10	4	7	7	3	4	
		90.0	12	12	7	12	5	11	11	5	10	3	10	10	4	7	3	6	6	3	3	
		140.0	11	11	5	8	3	7	7	3	4		6	6	3	3		5	5			
		180.0	8	8	3	5		5	5				5	5				5	5			
		230.0	6	6	3	3		5	5				5	5				5	5			
	* 3/8"ø POWERS RAWL DROP-IN & 3/8"ø STAINLESS STEEL BOLT WITH 1-9/16" MIN. EMBEDMENT (MIN. 3,000 P.S.I. CONCRETE)	75.0																				
		90.0																				
		140.0																				
		180.0																				
		230.0																				
	* 1/4"ø ALL-POINTS SOLID-SET ANCHOR W/ 7/8" EMBED. & 1/4-20 STAINLESS STEEL MACHINE SCREW (MIN. 3,000 P.S.I. CONCRETE)	75.0	12	12	10	12	7	12	12	7	12	5	12	12	6	11	4	8	8	4	5	
		90.0	12	12	8	12	6	12	12	6	11	4	11	11	5	7	3	7	7	3	3	
		140.0	12	12	5	9	4	8	8	3	4		7	7	3	3		6	6		3	
		180.0	9	9	4	5	3	6	6	3	3		6	6		3		6	6		3	
		230.0	7	7	3	3		6	6		3		6	6		3		6	6		3	
	1/4"ø ELCO CRETE FLEX W/ 1-3/4" MIN. EMBEDMENT (MIN. 3,350 P.S.I. CONCRETE)	75.0	12	12	12	12	9	12	12	9	12	6	12	12	7	12	5	11	11	5	6	3
		90.0	12	12	11	12	8	12	12	7	12	5	12	12	6	10	4	9	9	4	4	3
		140.0	12	12	7	12	5	11	11	4	6	3	9	9	4	4	3	8	8	3	3	
		180.0	12	12	5	7	4	8	8	3	4		8	8	3	3		8	8	3	3	
		230.0	9	9	4	5	3	8	8	3	3		8	8	3	3		8	8	3	3	
	5/16"ø ITW XL TAPCON W/ 1-1/4" MIN. EMBEDMENT (MIN. 2,900 P.S.I. CONCRETE)	75.0	12	12	12	12	11	12	12	10	12	7	12	12	8	12	6	12	12	5	8	4
		90.0	12	12	12	12	9	12	12	8	12	6	12	12	7	12	5	12	12	4	6	3
		140.0	12	12	7	12	5	12	12	5	7	4	12	12	4	6	3	10	10	4	5	3
		180.0	12	12	6	9	4	10	10	4	5	3	10	10	4	5	3	10	10	4	5	3
		230.0	12	12	4	6	3	10	10	4	5	3	10	10	4	5	3	10	10	4	5	3
HOLLOW CONCRETE BLOCK	1/4"ø ELCO TAPCON W/ 1-1/4" MIN. EMBEDMENT	75.0	9	9	5	9	3	6	6	3	6		5	5	3	4		3	3			
		90.0	7	7	4	7	3	5	5	3	4		4	4		3		3	3			
		140.0	4	4		3		3	3													
		180.0	3	3																		
		230.0	3	3																		
	* 1/4"ø ALL-POINTS SOLID-SET ANCHOR W/ 7/8" EMBED. & 1/4-20 STAINLESS STEEL MACHINE SCREW	75.0	12	12	7	12	5	12	12	5	12	3	11	11	4	9	3	7	7		4	
		90.0	12	12	6	12	4	11	11	4	9	3	9	9	3	6		6	6		3	
		140.0	10	10	3	7	3	7	7		3		6	6		3		5	5			
		180.0	7	7	3	4		5	5				5	5				5	5			
		230.0	6	6		3		5	5				5	5				5	5			

MIN. 3" EDGE DISTANCE

EXIST. STRUC.	ANCHOR TYPE	LOAD (W) P.S.F. MAX. (SEE NOTE 1)	SPANS UP TO 6'-0" (SEE NOTE 1) CONNECTION TYPE (SEE NOTE 3)					SPANS UP TO 8'-8" (SEE NOTE 1) CONNECTION TYPE (SEE NOTE 3)					SPANS UP TO 10'-2" (SEE NOTE 1) CONNECTION TYPE (SEE NOTE 3)					SPANS UP TO 15'-6" (SEE NOTE 1) CONNECTION TYPE (SEE NOTE 3)				
			C1	C2	C3	C4	C5	C1	C2	C3	C4	C5	C1	C2	C3	C4	C5	C1	C2	C3	C4	C5
CONCRETE	1/4"ø ELCO TAPCON W/ 1-3/4" MIN. EMBEDMENT (MIN. 3,320 P.S.I. CONCRETE)	75.0	12	12	11	12	8	12	12	8	12	5	12	12	7	12	5	9	9	4	5	3
		90.0	12	12	9	12	7	12	12	6	12	4	12	12	5	8	4	8	8	3	4	
		140.0	12	12	6	10	4	9	9	4	5	3	8	8	3	4		7	7	3	3	
		180.0	10	10	4	6	3	7	7	3	3		7	7	3	3		7	7	3	3	
		230.0	8	8	3	4		7	7	3	3		7	7	3	3		7	7	3	3	
	* 3/8"ø POWERS RAWL DROP-IN & 3/8"ø STAINLESS STEEL BOLT WITH 1-9/16" MIN. EMBEDMENT (MIN. 3,000 P.S.I. CONCRETE)	75.0	12	12	12	12	11	12	12	10	12	7	12	12	8	12	6	12	12	5	7	4
		90.0	12	12	12	12	9	12	12	8	12	6	12	12	7	11	5	10	10	4	5	
		140.0	12	12	8	12	5	12	12	5	7	4	10	10	4	5		9	9	4	4	
		180.0	12	12	6	8	4	9	9	4	4		9	9	4	4		9	9	4	4	
		230.0	11	11	4	5		9	9	4	4		9	9	4	4		9	9	4	4	
	* 1/4"ø ALL-POINTS SOLID-SET ANCHOR W/ 7/8" EMBED. & 1/4-20 STAINLESS STEEL MACHINE SCREW (MIN. 3,000 P.S.I. CONCRETE)	75.0	12	12	12	12	9	12	12	9	12	6	12	12	8	12	5	11	11	5	6	3
		90.0	12	12	11	12	8	12	12	7	12	5	12	12	6	10	4	9	9	4	4	3
		140.0	12	12	7	12	5	10	10	5	6	3	9	9	4	4	3	8	8	3	3	
		180.0	12	12	5	7	4	8	8	3	4		8	8	3	3		8	8	3	3	
		230.0	9	9	4	4	3	8	8	3	3		8	8	3	3		8	8	3	3	
	1/4"ø ELCO CRETE FLEX W/ 1-3/4" MIN. EMBEDMENT (MIN. 3,350 P.S.I. CONCRETE)	75.0	12	12	12	12	11	12	12	10	12	7	12	12	9	12	6	12	12	6	7	4
		90.0	12	12	12	12	9	12	12	9	12	6	12	12	7	11	5	10	10	5	5	3
		140.0	12	12	8	12	6	12	12	5	6	4	10	10	5	5	3	9	9	4	4	3
		180.0	12	12	6	8	4	9	9	4	4	3	9	9	4	4	3	9	9	4	4	3
		230.0	10	10	5	5	3	9	9	4	4	3	9	9	4	4	3	9	9	4	4	3
	5/16"ø ITW XL TAPCON W/ 1-1/4" MIN. EMBEDMENT (MIN. 2,900 P.S.I. CONCRETE)	75.0	12	12	12	12	12	12	12	12	12	10	12	12	12	12	8	12	12	7	10	5
		90.0	12	12	12	12	12	12	12	11	12	8	12	12	10	12	7	12	12	6	7	4
		140.0	12	12	10	12	8	12	12	7	9	5	12	12	6	7	4	12	12	5	6	4
		180.0	12	12	8	11	6	12	12	5	6	4	12	12	5	6	4	12	12	5	6	4
		230.0	12	12	6	7	4	12	12	5	6	4	12	12	5	6	4	12	12	5	6	4
HOLLOW CONCRETE BLOCK	1/4"ø ELCO TAPCON W/ 1-1/4" MIN. EMBEDMENT	75.0	11	11	6	11	4	8	8	4	8	3	6	6	4	6		4	4			
		90.0	9	9	5	9	3	6	6	3	5		5	5	3	4		3	3			
		140.0	6	6	3	4		4	4				3	3				3	3			
		180.0	4	4				3	3				3	3				3	3			
		230.0	3	3				3	3				3	3				3	3			
	* 1/4"ø ALL-POINTS SOLID-SET ANCHOR W/ 7/8" EMBED. & 1/4-20 STAINLESS STEEL MACHINE SCREW	75.0	12	12	9	12	7	12	12	6	12	4	12	12	5	11	4	8	8	3	4	
		90.0	12	12	8	12	5	12	12	5	10	4	10	10	4	7	3	6	6	3	3	
		140.0	11	11	5	8	3	7	7	3	4		6	6	3	3		5	5			
		180.0	8	8	4	5		6	6				5	5				5	5			
		230.0	6	6	3	3		5	5				5	5				5	5			

ANCHOR NOTES:

1. SPANS AND LOADS SHOWN HERE ARE FOR DETERMINING ANCHOR SPACING ONLY. ALLOWABLE STORM SHUTTER SPANS FOR SPECIFIC LOADS MUST BE LIMITED TO THOSE SHOWN IN TABLE 3.
2. REFERENCE SHEET 11 FOR NOTES 2 THRU 10.

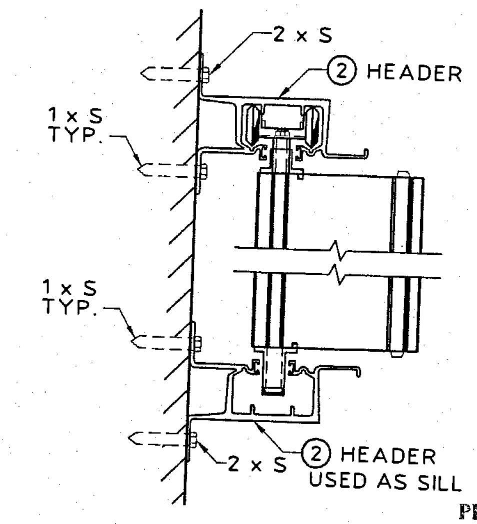

PRODUCT REVISED as complying with the Florida Building Code Acceptance No 03-1002.01 Expiration Date 11/13/2008 By [signature] Miami Dade Product Control Division

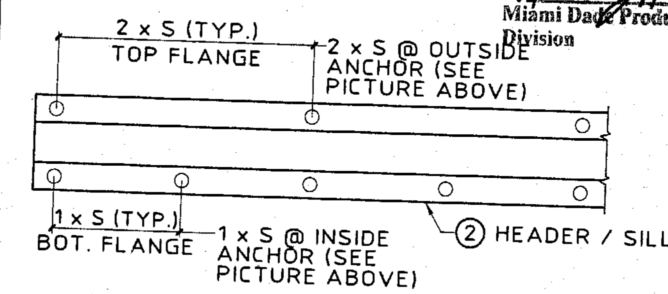

NOTE: "S" INDICATES ANCHOR SCHEDULE SPACING.

SPACING DIAGRAM FOR C1 CONNECTION TYPE:

- C1 CONNECTION TYPE USING PIECE ②
- APPLICABLE TO HR SYSTEM ONLY

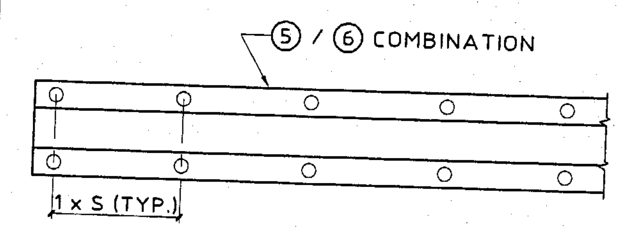

NOTE: "S" INDICATES ANCHOR SCHEDULE SPACING.

SPACING DIAGRAM FOR C3 CONNECTION TYPE:

- C3 CONNECTION TYPE USING PIECE ⑥ WITH OUTSIDE ANCHORS ONLY
- APPLICABLE TO HR SYSTEM ONLY

KNEZEVICH & ASSOCIATES, INC.
CONSULTING ENGINEERS • PRODUCT TESTING
1260 N. UNIVERSITY DRIVE, SUITE 180 • FORT LAUDERDALE, FL 33322
TEL: (954) 382-2800 • FAX: (954) 382-2989 • FLORIDA COA #3205
WEBSITE: WWW.KNEZEVICH.COM • E-MAIL: KA@KNEZEVICH.COM

COPYRIGHT © 2003 KNEZEVICH & ASSOCIATES, INC
6.8-HR SYSTEM LICENSED BY SOUTHERN SHUTTER ASSOCIATION

VIKING SHUTTER
A.C.C. MANUFACTURING, LLC
1300 LAKE WASHINGTON ROAD
MELBOURNE, FL 32935
(407) 752-9535

V.J. KNEZEVICH
PROFESSIONAL ENGINEER
FL License No. PE 0010983

SEP 11 2003

revisions			
no	date	by	description
1	07/08/03	OLB	COUNTY COMMENTS
2	07/29/03	OLB	GEN. NOTE 2 & DET. A ON 3

SSA I.D.# 030911032580

date 04/09/2003
scale AS NOTED
drawn by MCR
design by VJK
checked by VJK
drawing no. 03-907

HR ACCORDION SHUTTER

NOT APPLICABLE TO 6.8 ACCORDION SHUTTER

ANCHOR SCHEDULE

FASTENER MAXIMUM SPACING (INCHES) REQUIRED FOR VARIOUS DESIGN LOADS AND SPANS

EXIST. STRUC.	ANCHOR TYPE	LOAD (W) P.S.F. MAX. (SEE NOTE 1)	MIN. 2-1/2" EDGE DISTANCE																			
			SPANS UP TO 6'-0" (SEE NOTE 1)					SPANS UP TO 8'-8" (SEE NOTE 1)					SPANS UP TO 10'-2" (SEE NOTE 1)					SPANS UP TO 15'-6" (SEE NOTE 1)				
			CONNECTION TYPE (SEE NOTE 3)					CONNECTION TYPE (SEE NOTE 3)					CONNECTION TYPE (SEE NOTE 3)					CONNECTION TYPE (SEE NOTE 3)				
			C1	C2	C3	C4	C5	C1	C2	C3	C4	C5	C1	C2	C3	C4	C5	C1	C2	C3	C4	C5
CONCRETE	1/4"Φ ITW TAPCON W/ 1-3/4" MIN. EMBEDMENT (MIN. 3,192 P.S.I. CONCRETE)	75.0	12	12	11	12	8	12	12	8	12	6	12	12	6	12	5	11	11	4	6	3
		90.0	12	12	9	12	7	12	12	6	12	5	12	12	5	10	4	9	9	3	5	
		140.0	12	12	6	12	4	11	11	4	6	3	9	9	3	4		8	8	3	4	
		180.0	12	12	4	7	3	8	8	3	4		8	8	3	4		8	8	3	4	
		230.0	10	10	3	5		8	8	3	4		8	8	3	4		8	8	3	4	
HOLLOW CONC. BLOCK	1/4"Φ ITW TAPCON W/ 1-1/4" MIN. EMBEDMENT	75.0	10	10	5	10	3	7	7	3	7		6	6	3	5		4	4			
		90.0	8	8	4	8	3	6	6	3	5		5	5		3		3	3			
		140.0	5	5		4		3	3				3	3								
		180.0	4	4				3	3													
		230.0	3	3																		

ANCHOR SCHEDULE

FASTENER MAXIMUM SPACING (INCHES) REQUIRED FOR VARIOUS DESIGN LOADS AND SPANS

EXIST. STRUC.	ANCHOR TYPE	LOAD (W) P.S.F. MAX. (SEE NOTE 1)	MIN. 4" EDGE DISTANCE																			
			SPANS UP TO 6'-0" (SEE NOTE 1)					SPANS UP TO 8'-8" (SEE NOTE 1)					SPANS UP TO 10'-2" (SEE NOTE 1)					SPANS UP TO 15'-6" (SEE NOTE 1)				
			CONNECTION TYPE (SEE NOTE 3)					CONNECTION TYPE (SEE NOTE 3)					CONNECTION TYPE (SEE NOTE 3)					CONNECTION TYPE (SEE NOTE 3)				
			C1	C2	C3	C4	C5	C1	C2	C3	C4	C5	C1	C2	C3	C4	C5	C1	C2	C3	C4	C5
HOLLOW CONC. BLOCK	5/16"Φ ITW XL TAPCON W/ 1-1/4" MIN. EMBEDMENT	75.0	12	12	8	12	5	9	9	6	9	3	8	8	5	7	3	5	5	3	3	
		90.0	11	11	7	11	4	8	8	5	6	3	6	6	4	4		4	4			
		140.0	7	7	4	5	3	5	5	3			4	4				3	3			
		180.0	5	5	3	3		4	4				3	3				3	3			
		230.0	4	4				3	3				3	3				3	3			

ANCHOR SCHEDULE

FASTENER MAXIMUM SPACING (INCHES) REQUIRED FOR VARIOUS DESIGN LOADS AND SPANS

EXIST. STRUC.	ANCHOR TYPE	LOAD (W) P.S.F. MAX. (SEE NOTE 1)	MIN. 3/4" EDGE DISTANCE																			
			SPANS UP TO 6'-0" (SEE NOTE 1)					SPANS UP TO 8'-8" (SEE NOTE 1)					SPANS UP TO 10'-2" (SEE NOTE 1)					SPANS UP TO 15'-6" (SEE NOTE 1)				
			CONNECTION TYPE (SEE NOTE 3)					CONNECTION TYPE (SEE NOTE 3)					CONNECTION TYPE (SEE NOTE 3)					CONNECTION TYPE (SEE NOTE 3)				
			C1	C2	C3	C4	C5	C1	C2	C3	C4	C5	C1	C2	C3	C4	C5	C1	C2	C3	C4	C5
WOOD	T≥1-27/32" 1/4"Φ WOOD LAG SCREW W/ MIN. 1-27/32" THREADED PENETRATION "T" SHEAR PARALLEL OR PERPENDICULAR TO WOOD GRAIN	75.0	12	12	7	12	6	12	12	5	12	4	12	12	4	12	3	12	12		7	
		90.0	12	12	6	12	5	12	12	4	12	3	12	12	3	11	3	10	10		5	
		140.0	12	12	4	12	3	12	12		7		10	10		5		9	9		4	
		180.0	12	12	3	8		9	9		4		9	9		4		9	9		4	
		230.0	11	11		5		9	9		4		9	9		4		9	9		4	
	* 7/16"Φ WOOD BUSHING W/ 7/8" MIN. EMBEDMENT STAINLESS STEEL STEEL MACHINE SCREW	75.0	10	10		10		7	7		7		6	6		5		4	4			
		90.0	9	9		9		6	6		5		5	5		3		3	3			
		140.0	5	5		4		4	4				3	3								
		180.0	4	4				3	3													
		230.0	3	3																		

ANCHOR SCHEDULE

FASTENER MAXIMUM SPACING (INCHES) REQUIRED FOR VARIOUS DESIGN LOADS AND SPANS

EXIST. STRUC.	ANCHOR TYPE	LOAD (W) P.S.F. MAX. (SEE NOTE 1)	MIN. 4-1/2" EDGE DISTANCE																			
			SPANS UP TO 6'-0" (SEE NOTE 1)					SPANS UP TO 8'-8" (SEE NOTE 1)					SPANS UP TO 10'-2" (SEE NOTE 1)					SPANS UP TO 15'-6" (SEE NOTE 1)				
			CONNECTION TYPE (SEE NOTE 3)					CONNECTION TYPE (SEE NOTE 3)					CONNECTION TYPE (SEE NOTE 3)					CONNECTION TYPE (SEE NOTE 3)				
			C1	C2	C3	C4	C5	C1	C2	C3	C4	C5	C1	C2	C3	C4	C5	C1	C2	C3	C4	C5
CONCRETE	* 3/8"Φ POWERS RAWL DROP-IN & 3/8"Φ STAINLESS STEEL BOLT WITH 1-9/16" MIN. EMBEDMENT (MIN. 3,000 P.S.I. CONCRETE)	75.0	12	12	12	12	12	12	12	12	12	11	12	12	12	12	9	12	12	8	9	6
		90.0	12	12	12	12	12	12	12	12	12	9	12	12	11	12	7	12	12	7	7	5
		140.0	12	12	12	12	8	12	12	8	8	5	12	12	7	6	5	11	11	6	5	4
		180.0	12	12	9	10	6	12	12	6	5	4	11	11	6	5	4	11	11	6	5	4
		230.0	12	12	7	7	5	11	11	6	5	4	11	11	6	5	4	11	11	6	5	4

ANCHOR NOTES:

1. **SPANS AND LOADS SHOWN HERE ARE FOR DETERMINING ANCHOR SPACING ONLY. ALLOWABLE STORM SHUTTER SPANS FOR SPECIFIC LOADS MUST BE LIMITED TO THOSE SHOWN IN TABLE 3.**
2. ENTER ANCHOR SCHEDULE BASED ON THE EXISTING STRUCTURE MATERIAL, ANCHOR TYPE AND EDGE DISTANCE. SELECT DESIGN LOAD GREATER THAN OR EQUAL TO NEGATIVE DESIGN LOAD ON SHUTTER AND SELECT SPAN GREATER THAN OR EQUAL TO SHUTTER SPAN.
3. SEE MOUNTING SECTION DETAILS FOR IDENTIFICATION OF CONNECTION TYPE.
4. EXISTING STRUCTURE MAY BE CONCRETE, HOLLOW BLOCK OR WOOD FRAMING. REFERENCE ANCHOR SCHEDULE FOR PROPER ANCHOR TYPE BASED ON TYPE OF EXISTING STRUCTURE AND APPROPRIATE CONNECTION TYPE. SEE CONNECTION DETAILS FOR IDENTIFICATION OF CONNECTION TYPE.
5. ANCHORS SHALL BE INSTALLED IN ACCORDANCE WITH MANUFACTURERS' RECOMMENDATIONS. EMBEDMENT LENGTHS SHALL BE AS NOTED AND DO NOT INCLUDE STUCCO OR OTHER FINISHES.
6. WHERE EXISTING STRUCTURE IS WOOD FRAMING, WOOD FRAMING CONDITIONS VARY. FIELD VERIFY THAT FASTENERS ARE INTO ADEQUATE WOOD FRAMING MEMBERS, NOT PLYWOOD. FASTENING TO PLYWOOD IS ACCEPTABLE ONLY FOR SIDE CLOSURE PIECES.
7. WHERE LAG SCREWS FASTEN TO NARROW FACE OF STUD FRAMING, FASTENER SHALL BE LOCATED IN CENTER OF NOMINAL 2" x 4" (MIN.) WOOD STUD. 3/4" EDGE DISTANCE IS ACCEPTABLE FOR WOOD FRAMING. WOOD STUD SHALL BE "SOUTHERN PINE" G=0.55 OR GREATER DENSITY. LAG SCREWS SHALL HAVE PHILLIPS PAN HEAD OR HEX HEAD.
8. MACHINE SCREWS SHALL HAVE MINIMUM OF 1/2" ENGAGEMENT OF THREADS IN BASE ANCHOR AND MAY HAVE EITHER A PAN HEAD, TRUSS HEAD, OR WAFER HEAD (SIDEWALK BOLT), U.O.N.
9. DESIGNATES ANCHOR CONDITIONS WHICH ARE NOT ACCEPTABLE USES.
10. * DESIGNATES ANCHORS WHICH ARE REMOVABLE BY REMOVING MACHINE SCREW, NUT OR WASHERED WINGNUT.

PRODUCT REVISED
as complying with the Florida
Buiding Code
Acceptance No 03-1002.01
Expiration Date 11/13/2008
By Helmy A. Nelson
Miami Dade Product Control
Division

KNEZEVICH & ASSOCIATES, INC.
CONSULTING ENGINEERS • PRODUCT TESTING
1260 N. UNIVERSITY DRIVE, SUITE 180 • FORT LAUDERDALE, FL 33322
TEL: (954) 382-2800 • FAX: (954) 382-2989 • FLORIDA COA #3205
WEBSITE: WWW.KNEZEVICH.COM • E-MAIL: KA@KNEZEVICH.COM

COPYRIGHT © 2003 KNEZEVICH & ASSOCIATES, INC

6.8-HR SYSTEM LICENSED BY SOUTHERN SHUTTER ASSOCIATION

VIKING SHUTTER
A.C.C. MANUFACTURING, LLC
1300 LAKE WASHINGTON ROAD
MELBOURNE, FL 32935
(407) 752-9535

V.J. KNEZEVICH
PROFESSIONAL ENGINEER
FL License No. PE 0010983

SEP 11 2003

revisions			
no	date	by	description
1	07/08/03	OLB	COUNTY COMMENTS
2	07/29/03	OLB	GEN. NOTE 2 & DET. A ON 3

SSA I.D.# 0309110325 8D

date 04/09/2003
scale AS NOTED
drawn by MCR
design by VJK
checked by VJK
drawing no. 03-907
sheet 11 of 12

Print Information: \\hurricane\ka\CADD\Associations\SSA\Acc\03-907\R2-sub\03-907-11.dwg MCantu 09/11/2003 10:03:39am 09/11/03 09:56

HR ACCORDION SHUTTER

NOT APPLICABLE TO 6.8 ACCORDION SHUTTER

TABLE 4 — MINIMUM SHUTTER SEPARATION FROM GLASS

POSITIVE DESIGN LOAD (W) (P.S.F.)	ACTUAL SHUTTER SPAN (L) (FT. - IN)	MIN. SEPARATION FROM GLASS FOR INSTALLATIONS LESS THAN OR EQUAL TO 30' ABOVE GRADE (IN.)	MIN. SEPARATION FROM GLASS FOR INSTALLATIONS GREATER THAN 30' ABOVE GRADE (IN.)
40.0	9-0	2-1/2	1-3/4
	11-0	2-1/2	2-1/8
	14-4	3-1/4	3-1/4
50.0	9-0	2-1/2	1-7/8
	11-0	2-1/2	2-1/4
	13-6	3-1/4	3-1/4
60.0	9-0	2-1/2	1-7/8
	11-0	2-1/2	2-3/8
	12-11	3-1/4	3-1/4
70.0	9-0	2-1/2	2
	11-0	2-1/2	2-1/2
	12-4	3-1/4	3-1/4
80.0	9-0	2-1/2	2
	11-0	2-3/4	2-3/4
	11-11	3-1/8	3-1/8
90.0	9-0	2-1/2	2
	11-0	2-7/8	2-7/8
	11-5	3-1/8	3-1/8
100.0	9-0	2-1/2	2-1/8
	10-0	2-1/2	2-1/2
	11-1	3-1/8	3-1/8
110.0	9-0	2-1/2	2-1/4
	10-0	2-5/8	2-5/8
	10-9	3	3
120.0	9-0	2-1/2	2-1/4
	10-0	2-3/4	2-3/4
	10-5	3	3

TABLE 3 NOTES:

1. DETERMINE BOTH THE POSITIVE AND THE NEGATIVE WIND LOADS. CHECK THEIR RESPECTIVE SPANS AND USE THE LESSER VALUE OF THE TWO.
2. FOR DESIGN LOADS BETWEEN TABULATED VALUES USE NEXT HIGHER LOAD OR LINEAR INTERPOLATION MAY BE USED TO DETERMINE ALLOWABLE SPANS.

TABLE 4 NOTE:

1. ENTER TABLE 4 WITH POSITIVE DESIGN LOAD TO DETERMINE MIN. STORM SHUTTER SEPARATION FROM GLASS.

TABLE 3 — ACCORDION SHUTTER SPAN SCHEDULE FOR ALL MOUNTING CONDITIONS

DESIGN WIND LOAD W (P.S.F.)	POSITIVE WIND LOAD	NEGATIVE WIND LOAD
	L max. (FT-IN)	L max. (FT-IN)
32.5	15-2	15-6
40.0	14-4	15-6
50.0	13-6	15-6
60.0	12-10	15-6
70.0	12-4	15-6
80.0	11-10	15-2
90.0	11-5	14-3
100.0	11-1	13-7
110.0	10-9	12-8
120.0	10-5	11-7
150.0	9-8	10-10
160.0	9-6	10-2
170.0	9-3	9-6
179.1	9-1	9-1
186.4	9-0	9-0
190.0	8-9	8-9
200.0	8-4	8-4
210.0	7-11	7-11
220.0	7-7	7-7
230.0	7-3	7-3

PRODUCT REVISED
as complying with the Florida
Buiding Code
Acceptance No 03-1002.01
Expiration Date 11/13/2008
By Helmy A. Mekler
Miami Dade Product Control
Division

KNEZEVICH & ASSOCIATES, INC.
CONSULTING ENGINEERS • PRODUCT TESTING
1260 N. UNIVERSITY DRIVE, SUITE 180 • FORT LAUDERDALE, FL 33322
TEL: (954) 382-2800 • FAX: (954) 382-2989 • FLORIDA COA #3205
WEBSITE: WWW.KNEZEVICH.COM • E-MAIL: KA@KNEZEVICH.COM
COPYRIGHT © 2003 KNEZEVICH & ASSOCIATES, INC.
6.8-HR SYSTEM LICENSED BY SOUTHERN SHUTTER ASSOCIATION

VIKING SHUTTER
A.C.C. MANUFACTURING, LLC
1300 LAKE WASHINGTON ROAD
MELBOURNE, FL 32935
(407) 752-9535

V.J. KNEZEVICH
PROFESSIONAL ENGINEER
FL License No: PE 0010983

SEP 11 2003

revisions			
no	date	by	description
1	07/08/03	OLB	COUNTY COMMENTS
2	07/29/03	OLB	GEN. NOTE 2 & DET. A ONLY

SSA I.D.# 030911032580

date 04/09/2003
scale AS NOTED
drawn by MCR
design by VJK
checked by VJK
drawing no. 03-907
sheet 12 of 12

Print Information: \\hurricane\ka\CADD\Associations\SSA\Acc\03-907\R2-sub\03-907-12.dwg MCantu 09/11/2003 10:03:50am 09/11/03 09:56