MIAMI-DADE

BUILDING CODE COMPLIANCE OFFICE (BCCO)
PRODUCT CONTROL DIVISION

MIAMI-DADE COUNTY, FLORIDA
METRO-DADE FLAGLER BUILDING
140 WEST FLAGLER STREET, SUITE 1603
MIAMI, FLORIDA 33130-1563
(305) 375-2901 FAX (305) 375-2908

NOTICE OF ACCEPTANCE (NOA)

YKK AP America
332 Firetower Road
Dublin, GA 31021

SCOPE:
This NOA is being issued under the applicable rules and regulations governing the use of construction materials. The documentation submitted has been reviewed by Miami-Dade County Product Control Division and accepted by the Board of Rules and Appeals (BORA) to be used in Miami Dade County and other areas where allowed by the Authority Having Jurisdiction (AHJ).

This NOA shall not be valid after the expiration date stated below. The Miami-Dade County Product Control Division (In Miami Dade County) and/or the AHJ (in areas other than Miami Dade County) reserve the right to have this product or material tested for quality assurance purposes. If this product or material fails to perform in the accepted manner, the manufacturer will incur the expense of such testing and the AHJ may immediately revoke, modify, or suspend the use of such product or material within their jurisdiction. BORA reserves the right to revoke this acceptance, if it is determined by Miami-Dade County Product Control Division that this product or material fails to meet the requirements of the applicable building code.

This product is approved as described herein, and has been designed to comply with the Florida Building Code, including the High Velocity Hurricane Zone.

DESCRIPTION: Series "YOW-225H TUH" Aluminum Project Out Window (L.M.I)

APPROVAL DOCUMENT: Drawing No. **W03-68,** titled "YOW-225H Alum Project Out Window (L.M.I)", sheets 1 through 5 of 5, prepared by manufacturer, dated 08-15-03 and last revised on 10-31-03, signed and sealed by Dr. Humayoun Farooq, bearing the Miami-Dade County Product Control Approval stamp with the Notice of Acceptance number and approval date by the Miami-Dade County Product Control Division.

MISSILE IMPACT RATING: Large and Small Missile Impact

LABELING: Each unit shall bear a permanent label with the manufacturer's name or logo, city, state and following statement: "Miami-Dade County Product Control Approved", unless otherwise noted herein.

RENEWAL of this NOA shall be considered after a renewal application has been filed and there has been no change in the applicable building code negatively affecting the performance of this product.

TERMINATION of this NOA will occur after the expiration date or if there has been a revision or change in the materials, use, and/or manufacture of the product or process. Misuse of this NOA as an endorsement of any product, for sales, advertising or any other purposes shall automatically terminate this NOA. Failure to comply with any section of this NOA shall be cause for termination and removal of NOA.

ADVERTISEMENT: The NOA number preceded by the words Miami-Dade County, Florida, and followed by the expiration date may be displayed in advertising literature. If any portion of the NOA is displayed, then it shall be done in its entirety.

INSPECTION: A copy of this entire NOA shall be provided to the user by the manufacturer or its distributors and shall be available for inspection at the job site at the request of the Building Official.
This NOA consists of this page 1 and evidence pages E-1 and E-2, as well as approval document mentioned above.
The submitted documentation was reviewed by **Theodore Berman, P.E.**

1/26/2004

PRODUCT CONTROL ACCEPTED

YKK AP America

NOTICE OF ACCEPTANCE: EVIDENCE SUBMITTED

A. DRAWINGS

1. Manufacturer's die drawings and sections.
2. Drawing No. **W03-69,** titled "YOW-225H Alum Project Out Window (L.M.I)", sheets 1 through 5 of 5, prepared by manufacturer, dated 08-15-03 and last revised on 10-31-03, signed and sealed by Dr. Humayoun Farooq.

B. TESTS

1. Test reports on 1) Air Infiltration Test, per FBC, TAS 202-94
   2) Uniform Static Air Pressure Test, Loading per FBC, TAS 202-94
   3) Water Resistance Test, per FBC, TAS 202-94
   4) Forced Entry Test, per FBC 2411 3.2.1 and TAS 202-94
   5) Cyclic Wind Pressure Loading per FBC, TAS 203-94
   6) Large Missile Impact Test per FBC, TAS 201-94

   along with marked-up drawings and installation diagram of an aluminum project out window, prepared by Hurricane Test Laboratory, Inc., Test Report No. **FTL-0231-0810-02**, dated 08/22/02 and 08/19/02, signed and sealed by Vinu J. Abraham, P.E.
2. Test reports on 1) Cyclic Wind Pressure Loading per FBC, TAS 203-94
   2) Large Missile Impact Test per FBC, TAS 201-94

   along with marked-up drawings and installation diagram of an aluminum project out window, prepared by Hurricane Test Laboratory, Inc., Test Report No. **FTL-0231-1210-02**, dated 12/11/02, signed and sealed by Vinu J. Abraham, P.E.

C. CALCULATIONS

1. Anchor Calculations, ASTM-E1300-98, and structural analysis, prepared by AL-Farooq Corporation, dated 09/25/03, signed and sealed by Humayoun Farooq, P.E.

D. MATERIAL CERTIFICATIONS

1. Notice of Acceptance No. **01-1204.01** issued to E.I. DuPont DeNemours for "Sentry Glass ® Plus" dated 01/17/02, expiring on 01/14/07.
2. Notice of Acceptance No. **03-0421.01** issued to Solutia, Inc. for "Saflex HP" dated 05/22/03, expiring on 04/14/08.
3. Notice of Acceptance No. **02-1205.03** issued to Security Impact Glass Holding L.I.C. for "SAF-GLAS Polycarbonate Laminate" dated 01/02/03, expiring on 12/16/07.

E. QUALITY ASSURANCE

1. Miami-Dade County Building Code Compliance Office

Theodore Berman, P.E.
Deputy Director, Product Control Division
NOA No 03-1006.07
Expiration Date: February 19, 2009
Approval Date: February 19, 2004

YKK AP America

NOTICE OF ACCEPTANCE: EVIDENCE SUBMITTED

F. STATEMENTS

1. Statement letter of conformance, dated 09/25/03, signed and sealed by Dr Humayoun Farooq, P.E.
2. Statement letter of no financial interest, dated 09/25/03, signed and sealed by Dr Humayoun Farooq, P.E.

G. OTHER

1. Letter from the consultant stating that the product is in compliance with the Florida Building Code (FBC).

Theodore Berman, P.E.
Deputy Director, Product Control Division
NOA No 03-1006.07
Expiration Date: February 19, 2009
Approval Date: February 19, 2004

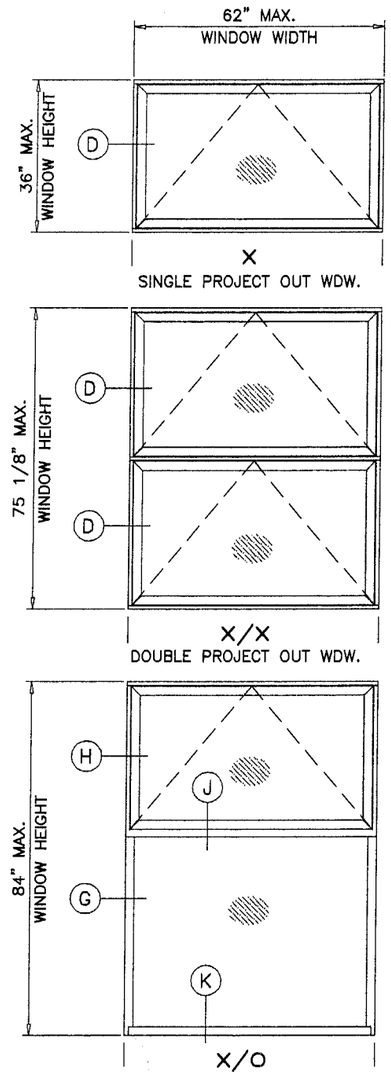

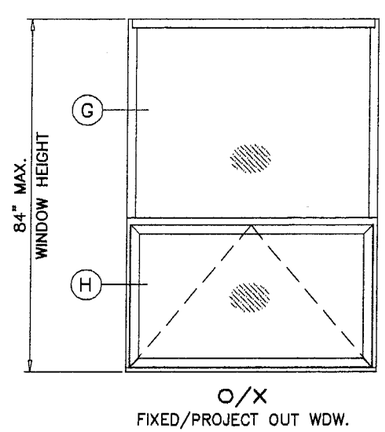

APPROVED CONFIGURATIONS

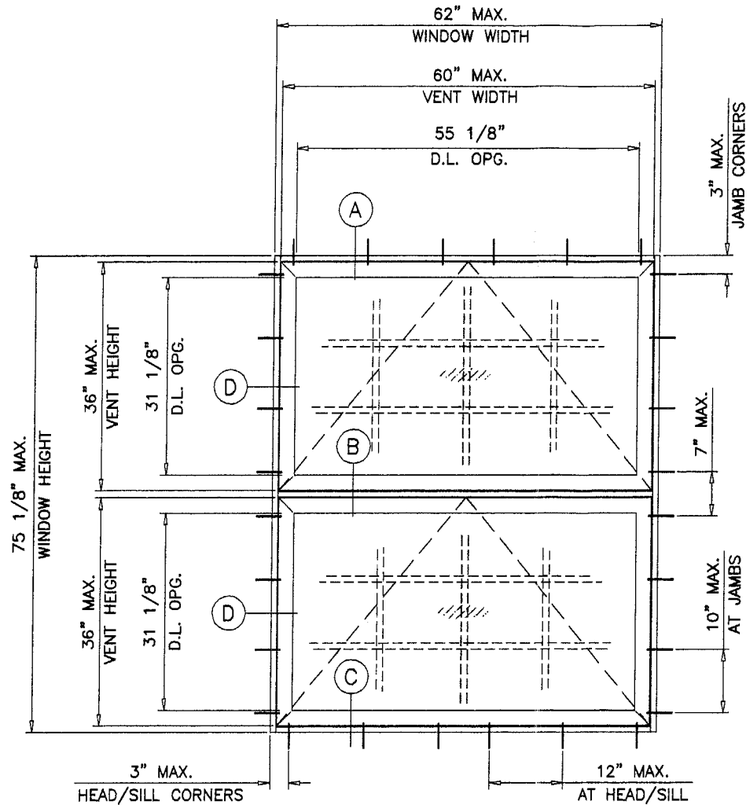

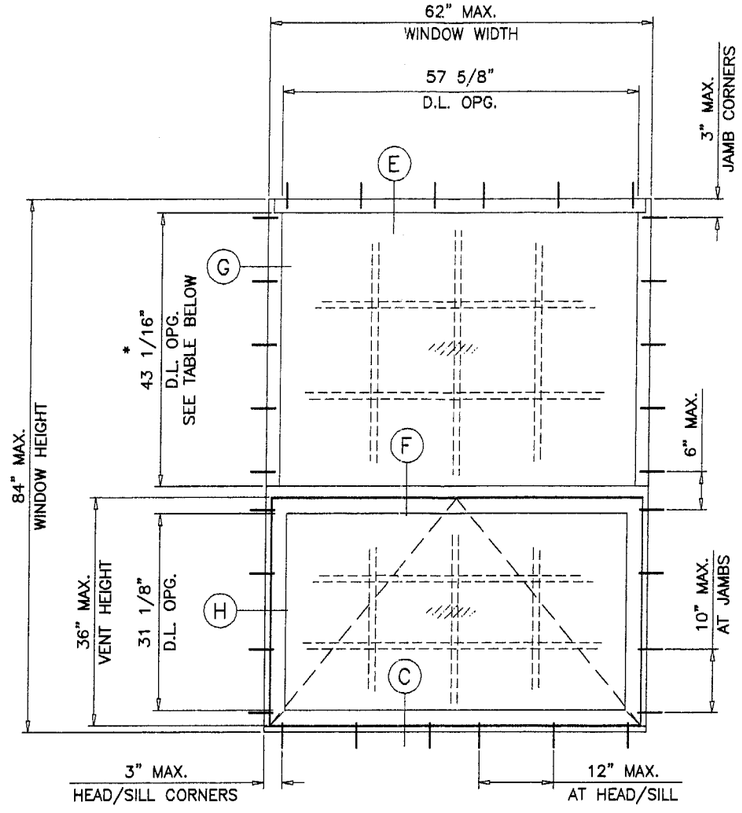

TYPICAL ELEVATION
TESTED UNITS

YOW-225H ALUM PROJECT OUT WINDOW (L.M.I.)

WINDOWS GLAZED WITH LAMINATED GLASS RATED FOR LARGE MISSILE IMPACT AND DO NOT REQUIRE SHUTTERS.

APPROVAL APPLIES TO;
SINGLE VENT WINDOWS OF X CONFIGURATION.
DUAL VENT WINDOWS OF X/X CONFIGURATION.
AWNING/FIXED COMBINATIONS OF X/O OR O/X CONFIGURATIONS.
ALSO SIDE BY SIDE COMBINATIONS OF TWO OR MORE WINDOWS USING APPROVED MULLIONS.

THIS PRODUCT IS DESIGNED TO COMPLY WITH THE HIGH VELOCITY HURRICANE ZONE OF THE 2001 FLORIDA BUILDING CODE.
ALSO FOR WIND LOADS AS PER ASCE 7-88. ASCE 7-93, ASCE 7-95 OR ASCE 7-98 AS REQUIRED BY PREVAILING BUILDING CODE.

WOOD BUCKS BY OTHERS, MUST BE ANCHORED PROPERLY TO TRANSFER LOADS TO THE STRUCTURE.

ANCHORS SHALL BE AS LISTED, SPACED AS SHOWN ON DETAILS. ANCHOR EMBEDMENT TO BASE MATERIAL SHALL BE BEYOND WALL DRESSING OR STUCCO.

ANCHORING OR LOADING CONDITIONS NOT SHOWN IN THESE DETAILS ARE NOT PART OF THIS APPROVAL.

MAXIMUM DESIGN LOAD RATING = + 65.0 PSF
(FOR SIZES SHOWN OR SMALLER) − 65.0 PSF

* LIMIT MAX. D.L. OPNG. SIZE IN FIXED(O) LITE AS SHOWN BELOW

GLASS TYPES 'A' & 'C'		GLASS TYPES 'B', 'D' & 'E'	
WIDTH	HEIGHT	WIDTH	HEIGHT
57 5/8"	43 1/16"	57 5/8"	29-3/4"

Engr: DR. HUMAYOUN FAROOQ
STRUCTURES
FLA. PE # 16857
C.A.N. 3538

NOV 07 2003

Approved as complying with the Florida Building Code
Date 02/19/04
NOA# 03-1006.07
Miami Dade Product Control Division
By: Glendon Denson

AL-FAROOQ CORPORATION
ENGINEERS, PLANNERS & PRODUCT DESIGN
1235 SW 87 AVE
MIAMI, FLORIDA 33174
TEL. (305) 264-8100 FAX. (305) 262-6978
COMP-ANL\W03-68YKK

YOW-225H ALUM PROJECT OUT WINDOW (L.M.I.)

YKK AP AMERICA INC.
332 FIRETOWER ROAD
DUBLIN, GEORGIA 31021
TEL.(478) 277-1955 FAX(478) 277-1978

revisions:

no	date	by	description
A	10.31.03		REV. PER BCCO COMMENTS

date: 08-15-03
scale: 1/2"=1'-0"
dr. by: HAMID
chk. by:

drawing no. W03-68

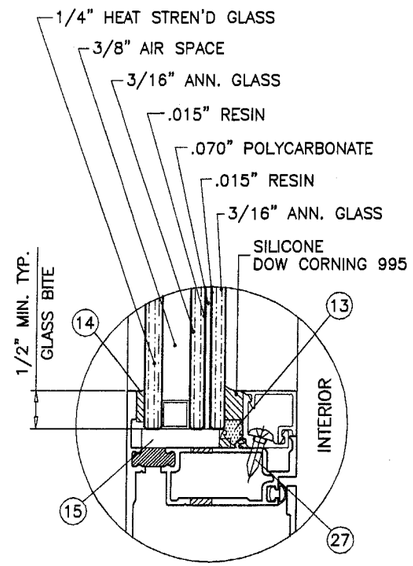

GLASS TYPE 'A'

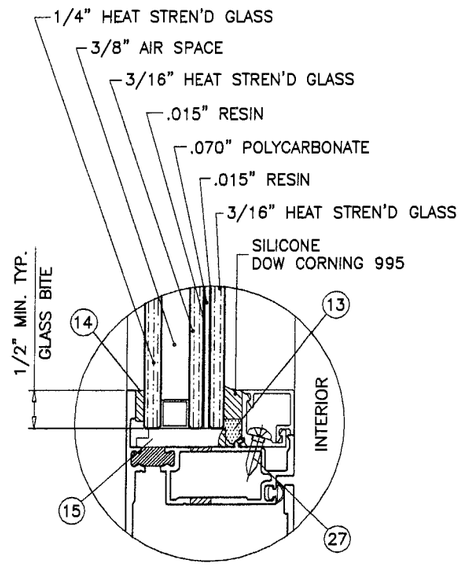

GLASS TYPE 'B'

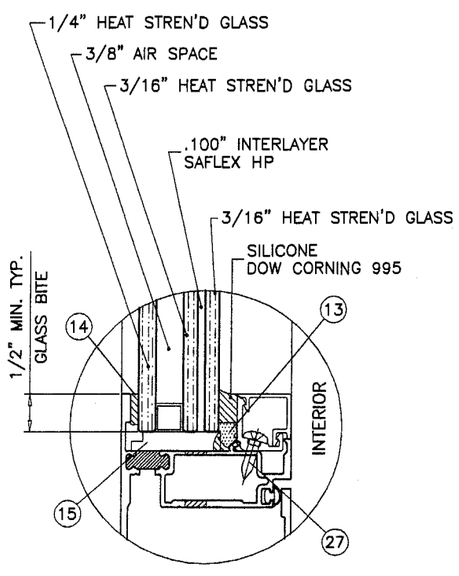

GLASS TYPE 'C'

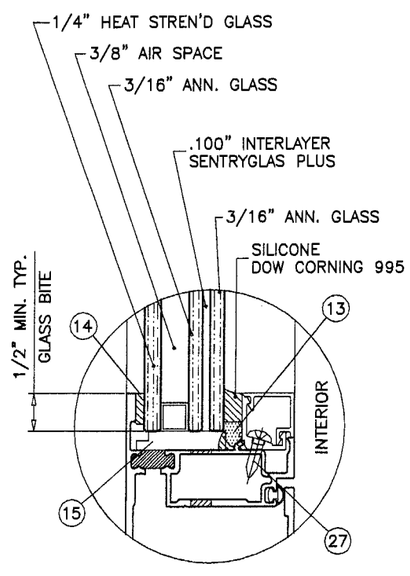

GLASS TYPE 'D'

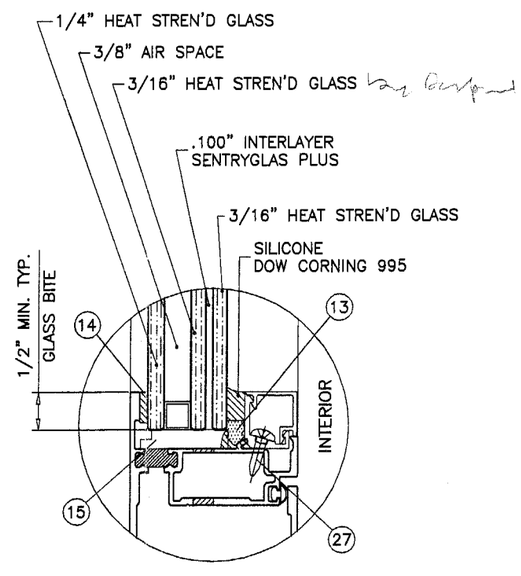

GLASS TYPE 'E'

1-1/16" OVERALL LAMINATED GLASS
LARGE MISSILE IMPACT RESISTANT

GLAZING OPTIONS

SEE SHEET 1 FOR LIMITATIONS

TYPICAL ANCHORS: SEE ELEV. FOR SPACING

1/4" TAPCONS

INTO 2BY WOOD BUCKS OR WOOD STRUCTURE
1-3/8" MIN. PENETRATION INTO WOOD

THRU 1BY WOOD BUCKS INTO MASONRY OR CONC.
1-1/4" MIN. EMBED INTO MASONRY OR CONC.

DIRECTLY INTO MASONRY OR CONC.
1-1/4" MIN. EMBED INTO MASONRY OR CONC.

1/4" DIA. ELCO DRILLFLEX OR EQUIV.

INTO STEEL OR ALUMINUM MULLIONS
(NO SHIM SPACE)

INTO METAL STRUCTURES (1/8" MIN. THICKNESS)
(1/4" MAX. SHIM SPACE)

SEALANTS:

FRAME CORNERS JOINTS SEALED WITH BUTYL RUBBER CORNER GASKET (#E2-0644).
TREMCO SPECTRUM 2 SILICONE SEALANT AT PERIMETER.

WEEP HOLES:

W1 = 1/4" X 1-1/16" WEEP SLOT AT CENTERLINE.
W2 = 9/32" DIA. WEEP HOLES AT 4" FROM EACH CORNER

LOCK OPTIONS:

BRONZECRAFT CAM HANDLES (E1-1541/1542)
AT LOCK STILE OF VENT, 8" FROM EACH END
SECURED WITH (2) #10 X 1/2" FH SMS.

BRONZECRAFT KEEPERS (E1-519)
AT FRAME SILL/HORIZ. IMPOST FACING LOCKS
SECURED WITH (2) #10 X 1/2" FH SMS.

Approved as complying with the
Florida Building Code
Date 02/19/04
NOA# 03-1006.07
Miami Dade Product Control
Division
By

Engr: DR. HUMAYOUN FAROOQ
STRUCTURES
FLA. PE # 16557
C.A.N. 3538
NOV 07 2003

AL-FAROOQ CORPORATION
ENGINEERS, PLANNERS & PRODUCT DESIGN
1235 SW 87 AVE
MIAMI, FLORIDA 33174
TEL (305) 264-8100 FAX. (305) 262-6978
COMP-ANL\W03-68YKK

YOW-225H ALUM PROJECT OUT WINDOW (L.M.I.)

YKK AP AMERICA INC.
332 FIRETOWER ROAD
DUBLIN, GEORGIA 31021
TEL(478) 277-1955 FAX(478) 277-1978

revisions:

no	date	by	description
A	10.31.03		NO CHANGE THIS SHEET

date: 08-15-03
scale: 1/2" = 1"
dr. by: HAMID
chk. by:

drawing no. W03-68

WOOD BUCKS NOT BY YKK AMERICA INC. MUST SUSTAIN LOADS IMPOSED BY GLAZING SYSTEM AND TRANSFER THEM TO THE BUILDING STRUCTURE.

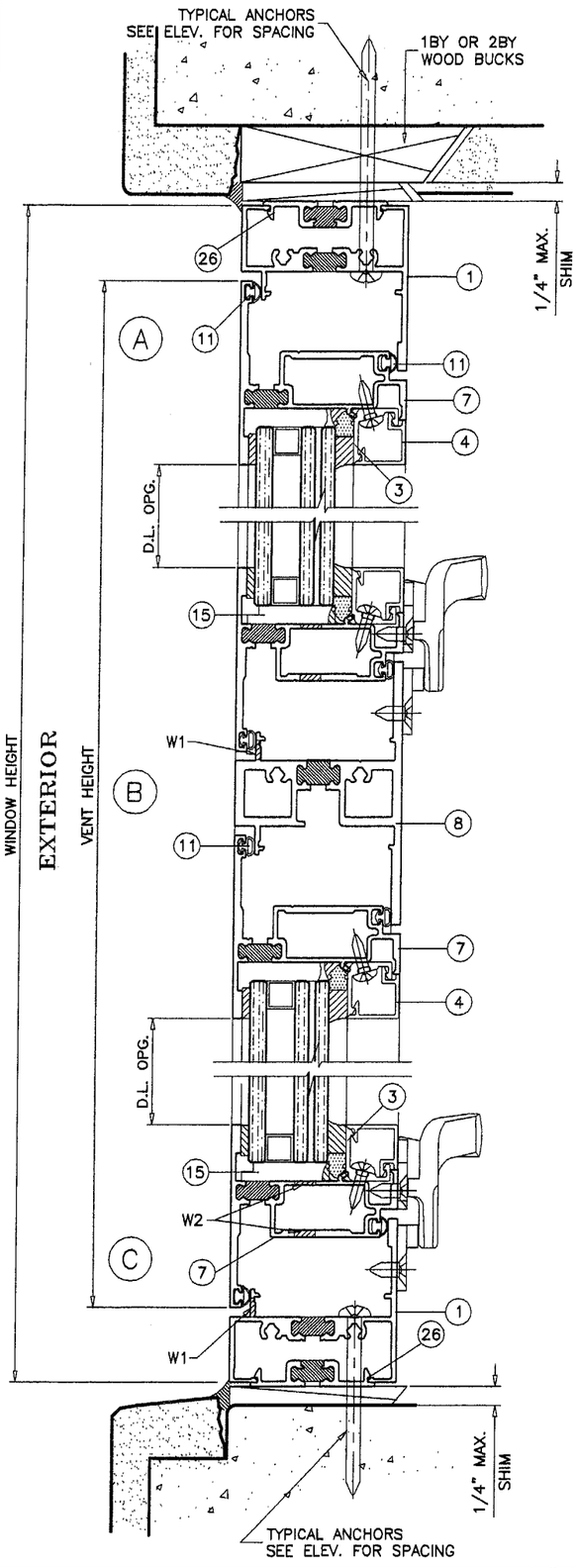

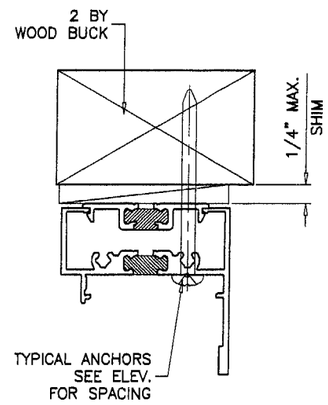

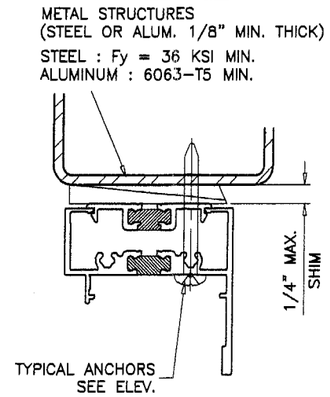

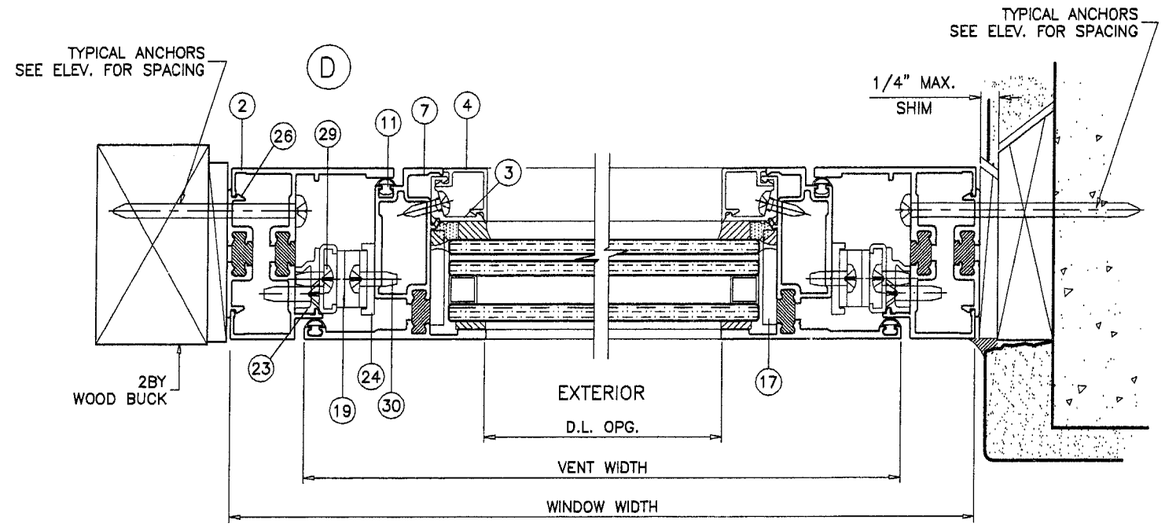

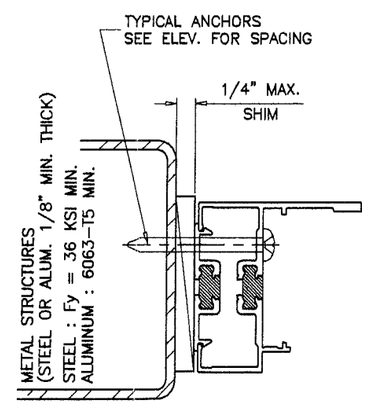

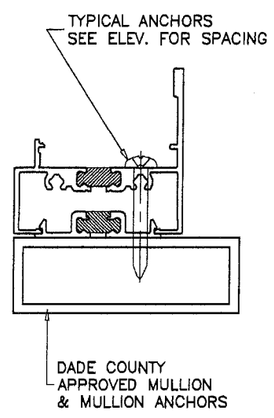

Approved as complying with the Florida Building Code
Date 02/19/04
NOA# 03-1006.07
Miami Dade Product Control Division
By

Engr: DR. HUMAYOUN FAROOQ
STRUCTURES
FLA. PE # 16557
C.A.N. 3538

NOV 07 2003

AL-FAROOQ CORPORATION
ENGINEERS, PLANNERS & PRODUCT DESIGN
1235 SW 87 AVE
MIAMI, FLORIDA 33174
TEL (305) 264-8100 FAX. (305) 262-6978
COMP-ANL\W03-68YKK

YOW-225H ALUM PROJECT OUT WINDOW (L.M.I.)

YKK AP AMERICA INC.
332 FIRETOWER ROAD
DUBLIN, GEORGIA 31021
TEL(478) 277-1955 FAX(478) 277-1978

revisions:			
no	date	by	description
A	10.31.03		NO CHANGE THIS SHEET

date: 08-15-03
scale: 1/2" = 1"
dr. by: HAMID
chk. by:

drawing no.
W03-68

sheet 3 of 5

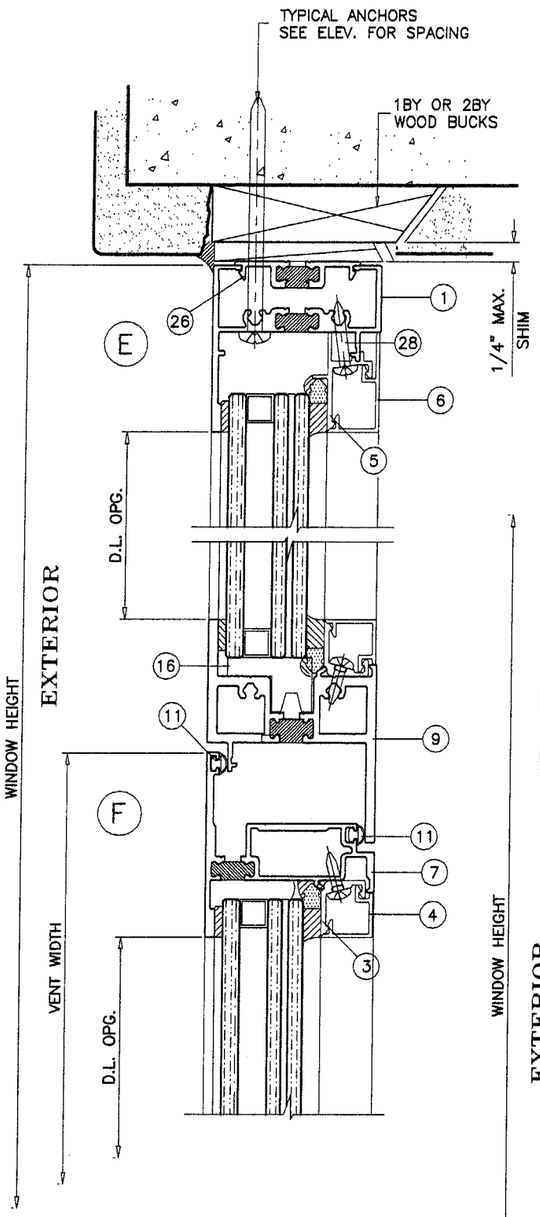

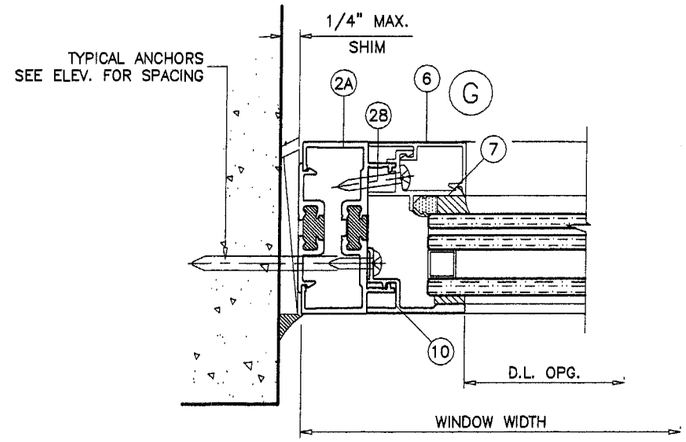

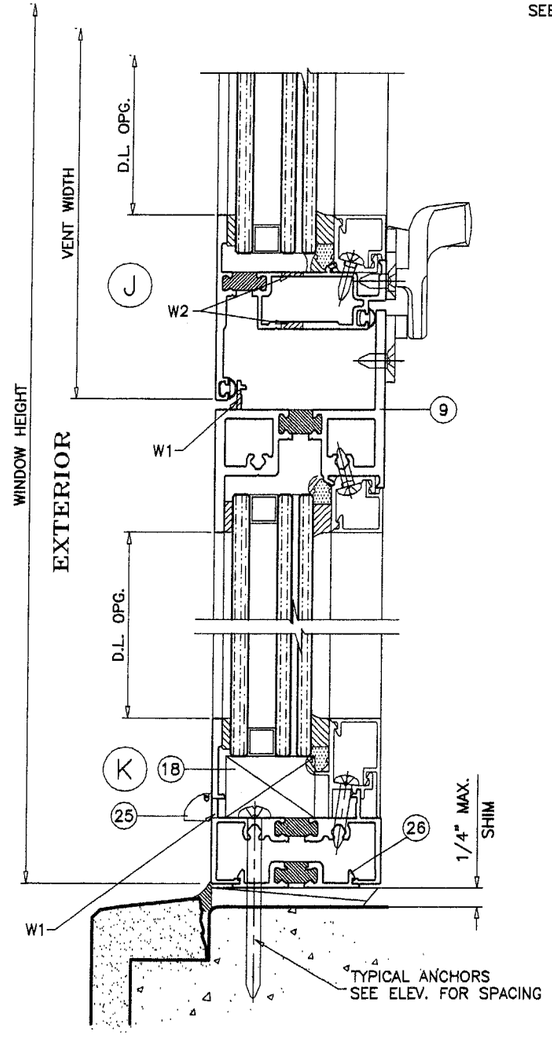

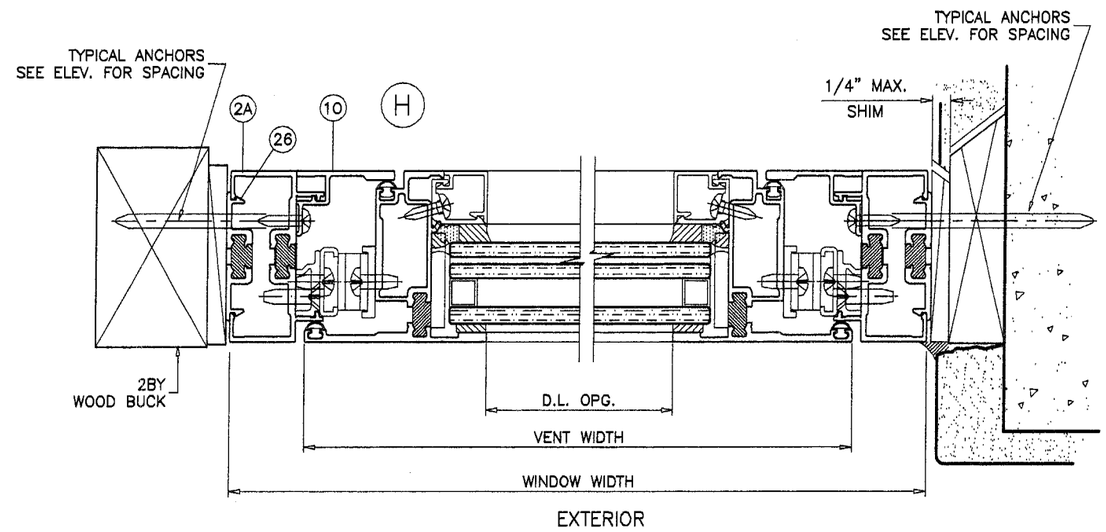

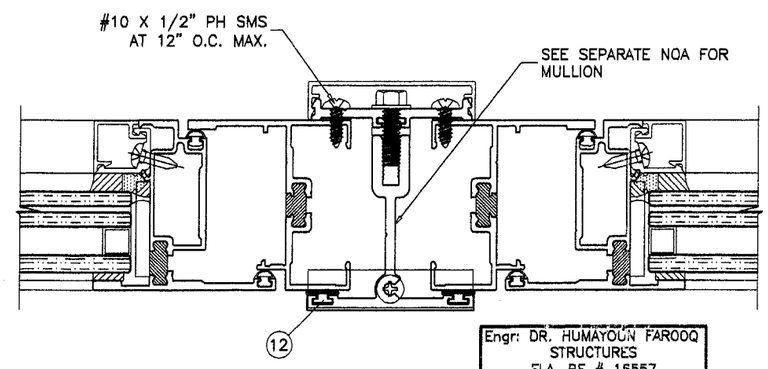

Approved as complying with the
Florida Building Code
Date 02/19/04
NOA# 03-1006.07
Miami Dade Product Control
Division
By

Engr: DR. HUMAYOUN FAROOQ
STRUCTURES
FLA. PE # 16557
C.A.N. 3538

NOV 07 2003

AL-FAROOQ CORPORATION
ENGINEERS, PLANNERS & PRODUCT DESIGN
1235 SW 87 AVE
MIAMI, FLORIDA 33174
TEL. (305) 264-8100 FAX. (305) 262-6978
COMP-ANL\W03-68YKK

YOW-225H ALUM PROJECT OUT WINDOW (L.M.I.)

YKK AP AMERICA INC.
332 FIRETOWER ROAD
DUBLIN, GEORGIA 31021
TEL(478) 277-1955 FAX(478) 277-1978

revisions:

no	date	by	description
A	10.31.03		NO CHANGE THIS SHEET

date: 08-15-03
scale: 1/2" = 1"
dr. by: HAMID
chk. by:

drawing no.
W03-68

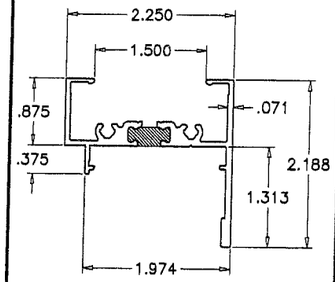

FRAME HEAD/SILL

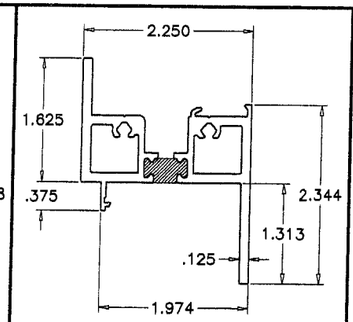

HORIZ. IMPOST (X/O OR O/X)

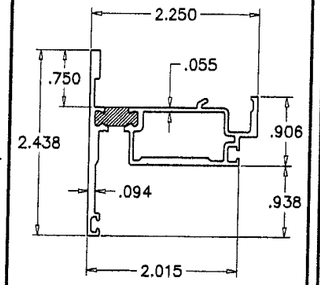

VENT STILE

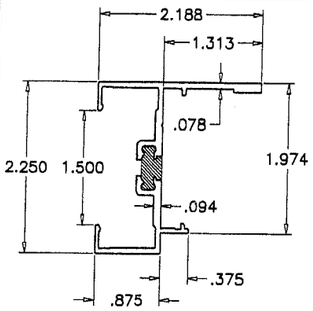

FRAME JAMB

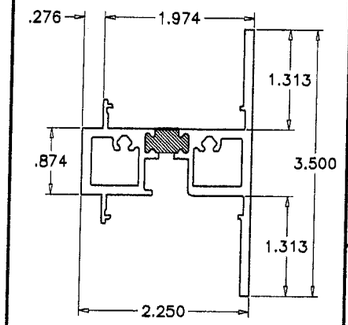

HORIZ. IMPOST (X/X)

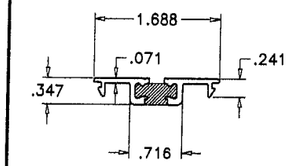

FILLER PLATE

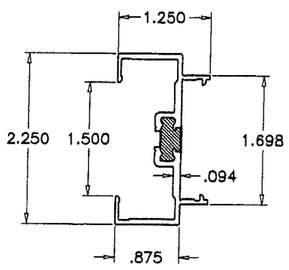

FRAME JAMB

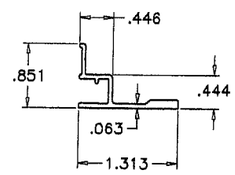

EXTERIOR GLAZING LEG

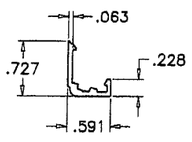

GLASS STOP

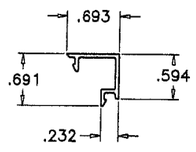

SNAP COVER

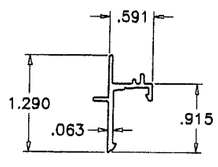

GLASS STOP (FIX. HEAD/SILL)

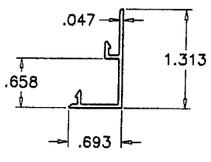

SNAP COVER (FIX. HEAD/SILL)

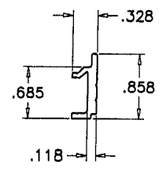

HINGE BASE

ITEM NO.	PART NUMBER	QUANTITY	DESCRIPTION	MATERIAL	MANF./SUPLIER/REMARKS
1	BE9-4501	2/ WDW	FRAME HEAD/SILL	6063-T5	YKK AMERICA INC.
2	BE9-4502	2/ WDW	FRAME JAMB	6063-T5	YKK AMERICA INC.
2A	BE9-4503	AS REQD.	FRAME JAMB	6063-T5	YKK AMERICA INC.
3	E9-4526	4/ WDW	GLAZING STOP (VENT)	6063-T5	YKK AMERICA INC.
4	E9-4527	4/ WDW	GLAZING STOP COVER (VENT)	6063-T5	YKK AMERICA INC.
5	E9-4524	4/ WDW	GLAZING STOP (FIX. LITE)	6063-T5	YKK AMERICA INC.
6	E9-4525	4/ WDW	GLAZING STOP COVER (FIX. LITE)	6063-T5	YKK AMERICA INC.
7	BE9-4504	4/ WDW	VENT STILE	6063-T5	YKK AMERICA INC.
8	BE9-4512	AS REQD.	HORIZ. IMPOST (X/X)	6063-T5	YKK AMERICA INC.
9	BE9-4509	AS REQD.	HORIZ. IMPOST (X/O OR O/X)	6063-T5	YKK AMERICA INC.
10	E9-4513	AS REQD.	EXTERIOR GLAZING LEG	6063-T5	YKK AMERICA INC.
11	E2-0625	AS REQD.	BULB WEATHERSTRIPPING	PVC	YKK AMERICA INC.
12	E2-0051	AS REQD.	BULB W'STRIPPING AT MULLION	PVC	YKK AMERICA INC.
13	E2-0359	AS REQD.	ARROW SPACER, 1" LONG	EPDM SPONGE	AT 3" FROM ENDS & 10" O.C. MAX.
14	E2-0648	AS REQD.	GLAZING TAPE (.196 X .406)	–	CLOSED CELL EPDM SPONGE
15	E2-0626	AS REQD.	SETTING BLOCKS	EPDM	1/4" X 1-3/16" X 4" LONG
16	E2-0647	AS REQD.	SETTING BLOCKS	EPDM	11/16" X 1-1/8" X 4" LONG
17	E2-0133	AS REQD.	SIDE BLOCKS	EPDM	–
18	E2-0646	AS REQD.	SETTING BLOCKS	EPDM	13/16" X 1-3/16" X 4" LONG
19	E1-1709	2/ VENT	16", 4-BAR SCISSOR HINGE	–	BRONZECRAFT
20	–	–	–	–	–
21	E1-1712	1/ CORNER	CORNER BLOCK	6063-T5	YKK AMERICA INC.
22	#10 X 1"	2/ CORNER	FRAME ASSEMBLY SCREWS	STEEL	PH SMS
23	E1-1711	2/ VENT	HINGE BASE	–	SECURED TO JAMB W/ (3) #10 X 3/4" FH SMS
24	E3-1105	2/ VENT	HINGE SPACER (10-1/2" LONG)	–	–
25	E3-1101	2/ WDW	WEEP COVER	NYLON	AT WEEP SLOTS
26	–	AS REQD.	FILLER PLATE, 2-1/2" LONG AT ANCHOR LOCATIONS	6063-T5	YKK AMERICA INC.
27	#8 X 1/2"	–	GLAZING STOP SCREWS	–	PH SMS AT 3" FROM ENDS & 10" O.C.
28	#10 X 1"	–	GLAZING STOP SCREWS	–	PH SMS AT 3" FROM ENDS & 10" O.C.
29	#10 X 3/8"	3/ HINGE	HINGE INSTALLATION SCREWS	–	PH SMS
30	#10 X 1/2"	3/ HINGE	HINGE INSTALLATION SCREWS	–	PH SMS

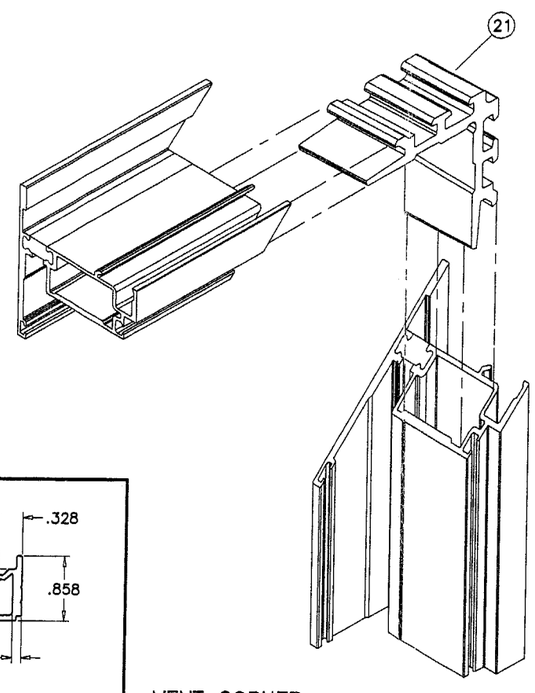

VENT CORNER

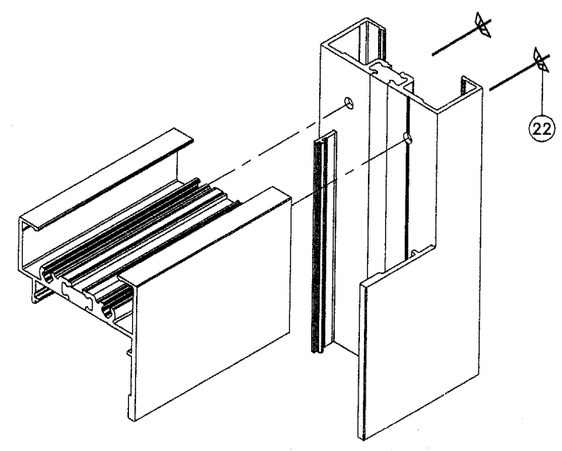

FRAME CORNER

Approved as complying with the Florida Building Code
Date 02/19/04
NOA# 03-1006.07
Miami Dade Product Control Division
By

Engr: DR. HUMAYOUN FAROOQ
STRUCTURES
FLA. PE # 16557
C.A.N. 3538

NOV 07 2003

AL-FAROOQ CORPORATION
ENGINEERS, PLANNERS & PRODUCT DESIGN
1235 SW 87 AVE
MIAMI, FLORIDA 33174
TEL. (305) 264-8100 FAX. (305) 262-6978
COMP-ANL\W03-68YKK

YOW-225H ALUM PROJECT OUT WINDOW (L.M.I.)

YKK AP AMERICA INC.
332 FIRETOWER ROAD
DUBLIN, GEORGIA 31021
TEL(478) 277-1955 FAX(478) 277-1978

revisions:

no	date	by	description
A	10.31.03		REV. PER BCCO COMMENTS

date: 08-15-03
scale: 1/2" = 1"
dr. by: HAMID
chk. by:

drawing no.
W03-68

sheet 5 of 5