MIAMI-DADE

BUILDING CODE COMPLIANCE OFFICE (BCCO)
PRODUCT CONTROL DIVISION

MIAMI-DADE COUNTY, FLORIDA
METRO-DADE FLAGLER BUILDING
140 WEST FLAGLER STREET, SUITE 1603
MIAMI, FLORIDA 33130-1563
(305) 375-2901 FAX (305) 375-2908

NOTICE OF ACCEPTANCE (NOA)

Miami Wall Systems, Inc.
701 West 25th Street
Hialeah, FL 33010

SCOPE:
This NOA is being issued under the applicable rules and regulations governing the use of construction materials. The documentation submitted has been reviewed by Miami-Dade County Product Control Division and accepted by the Board of Rules and Appeals (BORA) to be used in Miami Dade County and other areas where allowed by the Authority Having Jurisdiction (AHJ).

This NOA shall not be valid after the expiration date stated below. The Miami-Dade County Product Control Division (In Miami Dade County) and/or the AHJ (in areas other than Miami Dade County) reserve the right to have this product or material tested for quality assurance purposes. If this product or material fails to perform in the accepted manner, the manufacturer will incur the expense of such testing and the AHJ may immediately revoke, modify, or suspend the use of such product or material within their jurisdiction. BORA reserves the right to revoke this acceptance, if it is determined by Miami-Dade County Product Control Division that this product or material fails to meet the requirements of the applicable building code.

This product is approved as described herein, and has been designed to comply with the High Velocity Hurricane Zone of the Florida Building Code.

DESCRIPTION: Series 122 Aluminum Single Hung Window – S .M .Impact

APPROVAL DOCUMENT: Drawing No. **122-004**, titled " Series 122 Aluminum Single Hung Window-Small Missile Impact", dated 03-10-03 and last revised on 11-07-03, sheets 1 through 4, prepared by manufacturer, signed and sealed by Sifang Zhao, P.E., bearing the Miami-Dade County Product Control Revision stamp with the Notice of Acceptance number and expiration date by the Miami-Dade County Product Control Division. .

MISSILE IMPACT RATING: Small Missile Impact Resistant

LABELING: Each unit shall bear a permanent label with the manufacturer's name or logo, city, state and following statement: "Miami-Dade County Product Control Approved", unless otherwise noted herein.

RENEWAL of this NOA shall be considered after a renewal application has been filed and there has been no change in the applicable building code negatively affecting the performance of this product.

TERMINATION of this NOA will occur after the expiration date or if there has been a revision or change in the materials, use, and/or manufacture of the product or process. Misuse of this NOA as an endorsement of any product, for sales, advertising or any other purposes shall automatically terminate this NOA. Failure to comply with any section of this NOA shall be cause for termination and removal of NOA.

ADVERTISEMENT: The NOA number preceded by the words Miami-Dade County, Florida, and followed by the expiration date may be displayed in advertising literature. If any portion of the NOA is displayed, then it shall be done in its entirety.

INSPECTION: A copy of this entire NOA shall be provided to the user by the manufacturer or its distributors and shall be available for inspection at the job site at the request of the Building Official.
This NOA **revises** NOA **#03-0303.02** consists of this page 1 and evidence page as well as approval document mentioned above.
The submitted documentation was reviewed by **Ishaq I. Chanda, P.E.**

PRODUCT CONTROL ACCEPTED

8/ 1/8/4

Miami Wall Systems, Inc.

NOTICE OF ACCEPTANCE: EVIDENCE SUBMITTED

A. DRAWINGS

1. Manufacturer's die drawings and sections.
2. Drawing No. **122-004**, titled " Series 122 Aluminum Single Hung Window-Small Missile Impact", dated 03-10-03 and last revised on 11-07-03, sheets 1 through 4, prepared by manufacturer, signed and sealed by Sifang Zhao, P.E.

Note: The revision consists of addition of upgrade bottom rail (#6A) & sill (2A).

B. TESTS (Photo copies from file #03-0303.02)

1. Test reports on 1) Air Infiltration Test, per FBC, TAS 202-94
   2) Uniform Static Air Pressure Test, Loading per FBC TAS 202-94
   3) Water Resistance Test, per FBC, TAS 202-94
   4) Small Missile Impact Test per FBC, TAS 201-94
   5) Cyclic Wind Pressure Loading per FBC, TAS 203-94
   6) Forced Entry Resistant test per TAS202-94 & AAMA 1302.5

along with marked-up drawings and installation diagram of aluminum single hung mulled fixed windows, prepared by Fenestration Testing Laboratory, Inc., Test Report No. **FTL-3383 (02041)**, dated April 30 2002, signed and sealed by Luis Antonio Figueredo, P.E. (Note: This test report revised by addendum letter on dtd 05-22-03 based on review of test report by Joseph Chan, P. E.)

2. Test reports on 1) Air Infiltration Test, per FBC, TAS 202-94
   2) Uniform Static Air Pressure Test, Loading per FBC TAS 202-94
   3) Water Resistance Test, per FBC, TAS 202-94
   4) Small Missile Impact Test per FBC, TAS 201-94
   5) Cyclic Wind Pressure Loading per FBC, TAS 203-94
   6) Forced Entry Resistant test per TAS202-94 & AAMA 1302.5

along with marked-up drawings and installation diagram of aluminum single hung mulled fixed windows, prepared by Fenestration Testing Laboratory, Inc., Test Report No. **FTL-3384 (02042)**, dated May 03, 2002, signed and sealed by Luis Antonio Figueredo, P.E.(Note: This test report revised by addendum letter on dtd 05-22-03 based on review of test report by Joseph Chan, P. E.)

2. Additional reference test reports FTL 3385 and, 3386 per TAS 201, 202, 203-94, issued by Fenestration Testing laboratory.

B. CALCULATIONS (Photo copies from file #03-0303.02)

1. Anchor Calculations and structural analysis, prepared by Miami Wall Systems, Inc., dated 05-20-03 revised on 07-24-03, signed and sealed by Sifang Zhao, P.E.
2. Anchor Calculations and structural analysis, prepared by Applied Engineering Concept, Inc., dated 05-29-02, signed and sealed by Kelvyn whitfield, P.E.

D. QUALITY ASSURANCE BY:

1. Miami-Dade County Building Code Compliance Office (BCCO)

E. MATERIAL CERTIFICATIONS (Photo copies from file #03-0303.02)

1. Notice of Acceptance No. **01-1204.01** issued to E.I. DuPont DeNemours for "Sentry Glass®", expiring on 01/14/2007.
2. Notice of Acceptance No. **00-1212.04** issued to E.I. DuPont DeNemours for "Dupont Butacite ® PVB", expiring on 12/12/05.

F. STATEMENTS (Photo copies from file #03-0303.02)

1. Request letter for revision dated Sep. 30, 2003 by Miami Wall System, signed by P. Valencia.
2. Statement letter of conformance, dated 08-04-03, signed and sealed by Sifang Zhao, P.E.
3. Statement letter of no financial interest, dtd 07-24-03, signed & sealed by Sifang Zhao, P.E.

G. OTHER: This NOA **revises # 03-0303.02** expiring August 29, 2008.

Ishaq I. Chanda

Ishaq I. Chanda, P.E.
Product Control Examiner
NOA No 03-1008.04
Expiration Date: August 29, 2008
Approval Date: January 08, 2004

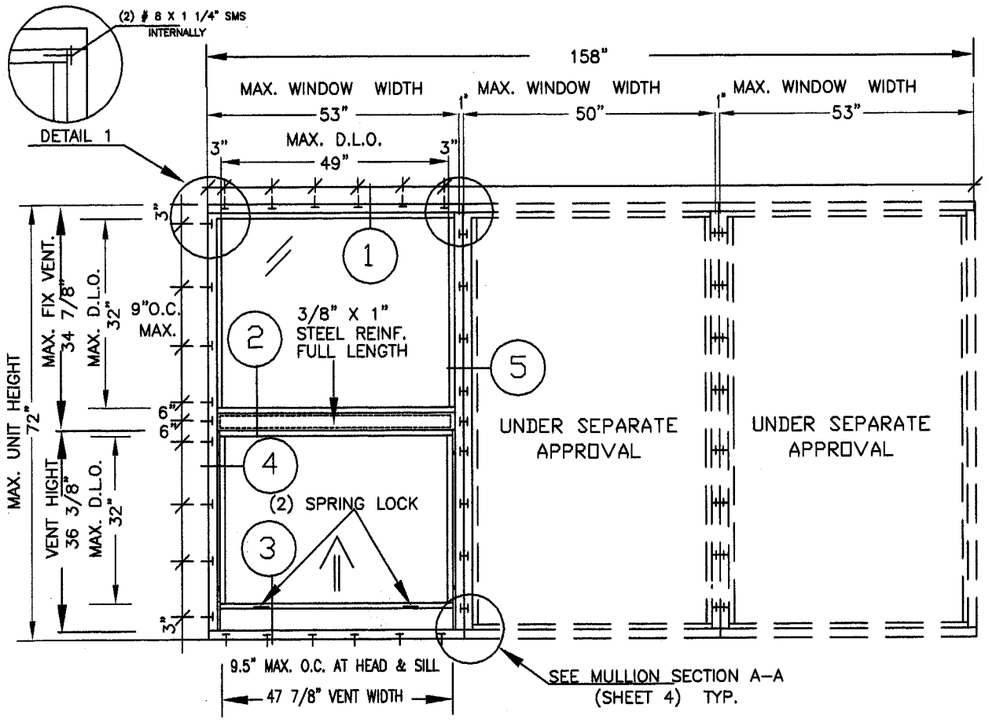

DP: 120 (POSITIVE & NEGATIVE), SMALL MISSILE

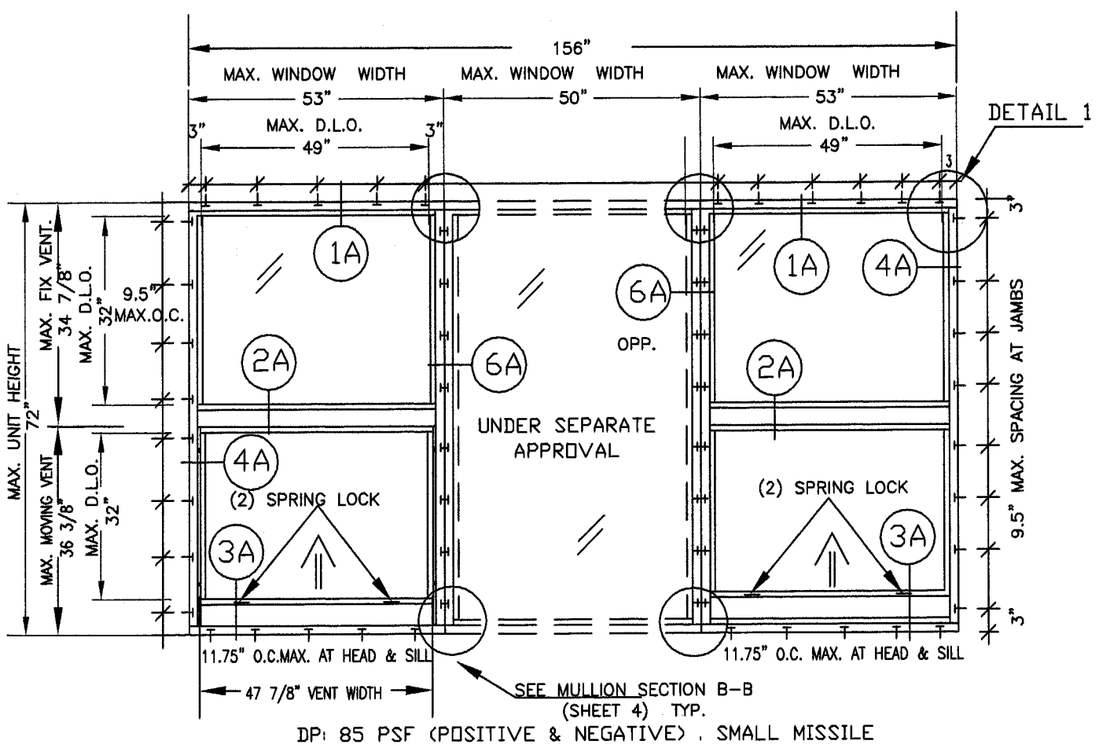

DP: 85 PSF (POSITIVE & NEGATIVE) , SMALL MISSILE

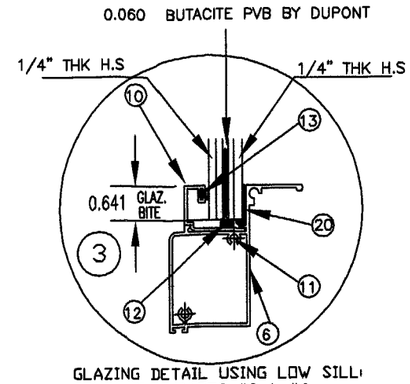

GLAZING DETAIL USING LOW SILL WITH PARTS #2 & #6

OPTION No. 1
OVERALL 9/16"/HS LAMINATED GLASS

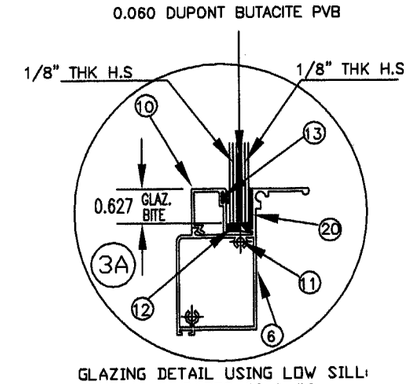

GLAZING DETAIL USING LOW SILL WITH PARTS #2 & #6

OPTION No. 2
OVERALL 0.340/HS LAMINATED GLASS

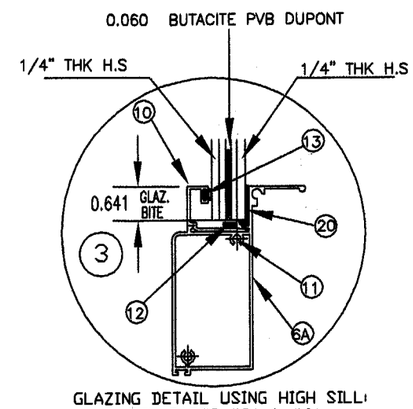

GLAZING DETAIL USING HIGH SILL WITH PARTS #2A & #6A

OPTION No. 1
OVERALL 9/16"/HS LAMINATED GLASS

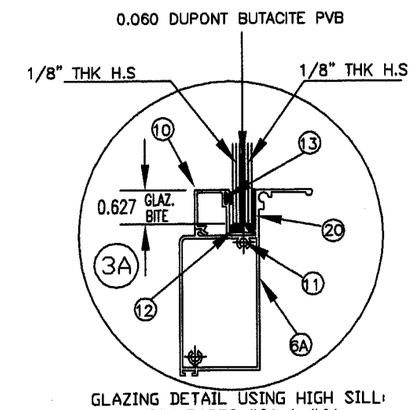

GLAZING DETAIL USING HIGH SILL WITH PARTS #2A & #6A

OPTION No. 2
OVERALL 0.340/HS LAMINATED GLASS

DESIGN PRESSURE RATING (P.S.F.)

	WITH GLAZING OPTION 1 AND WITH STEEL REINFORCEMENT	WITH GLAZING OPTION 2 NO STEEL REINFORCEMENT RQ'D.
POSITIVE	120.0	85.0
NEGATIVE	120.0	85.0

NOTES:
1. MIAMI WALL FIXED UNITS UNDER SEPARATE APPROVAL. LOWER DESIGN PRESSURE CONTROLS.
2. 1" X 4" P.T. WOOD BUCKS MUST BE ENGINEERED TO TAKE THE WIND LOADS IMPOSED BY WINDOWS AND TO BE REVIEWED BY BUILDING OFFICIAL.
3. FRAME CORNER, FIXED PANEL & MULLION SEALED W/ SILICONE
4. GLAZING TO BE LAMINATED BY DUPONT APPROVED LAMINATOR
5. HURRICANE PROTECTION SYSTEM (SHUTTERS): INSTALLATION OF THIS SYSTEM UP TO 30 FT. ABOVE THE GRADE WILL REQUIRE HURRICANE PROTECTION SYSTEM, BUT INSTALLATIONS ABOVE 30 FT. GRADE WILL NOT REQUIRE A HURRICANE PROTECTION SYSTEM
6. ALL INSTALLATION FASTENERS MUST BE FACTORY PUNCHED FOR 1/4" DIAM. FLAT HEAD TAPCONS.

MIAMI WALL SYSTEMS, INC.
701 WEST 25 STREET.
HIALEAH, FL. 33010
TEL. (305) 888 2300

SERIES: 122 ALUMINUM SINGLE HUNG WINDOW SMALL MISSILE IMPACT

DATE: 3/10/03
DWG. BY: J.C.
SCALE: N/A

DWG. NO.: 122-004

SHEET 1 OF 4

NO.	DATE	
1	05/06/03	AS PER DADE COUNTY
2	07/11/03	AS PER DADE COUNTY
3	11/07/03	ADD VENT & FRAME SILL

REVISIONS DESCRIPTION

SIFANG ZHAO
P.E. 50685
STRUCTUAL ENGINEER

12/8/03

PRODUCT REVISED
as complying with the Florida Building Code
Acceptance No. 03-1008.04
Expiration Date AUGUST 29, 2008
By Ishaq I. Llanda
Miami Dade Product Control Division

DIMENSIONS IN INCHES– HALF SCALE

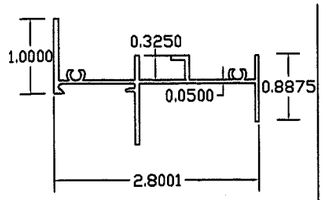

122–001
PART # 1

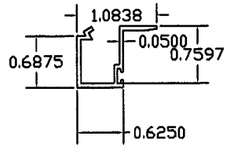

122–008
PART # 8

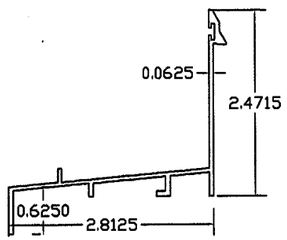

122–002
PART # 2

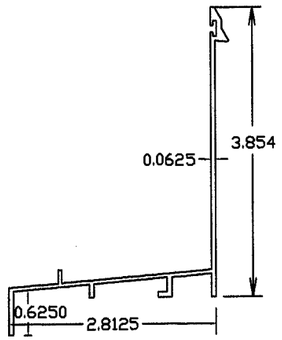

122–002 A
PART # 2A

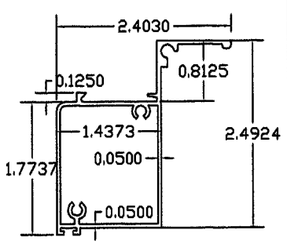

122–006
PART # 6

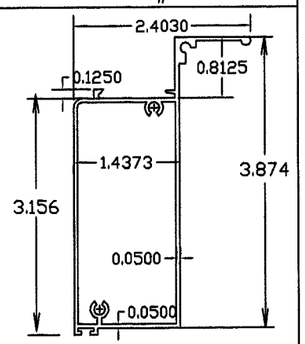

122–006 A
PART # 6A

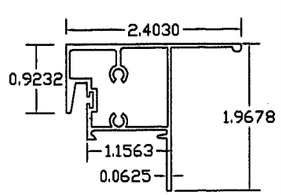

122–005
PART # 5

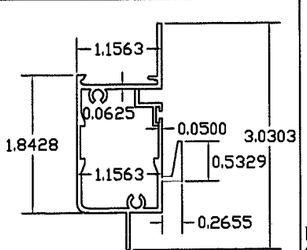

122–004
PART # 4

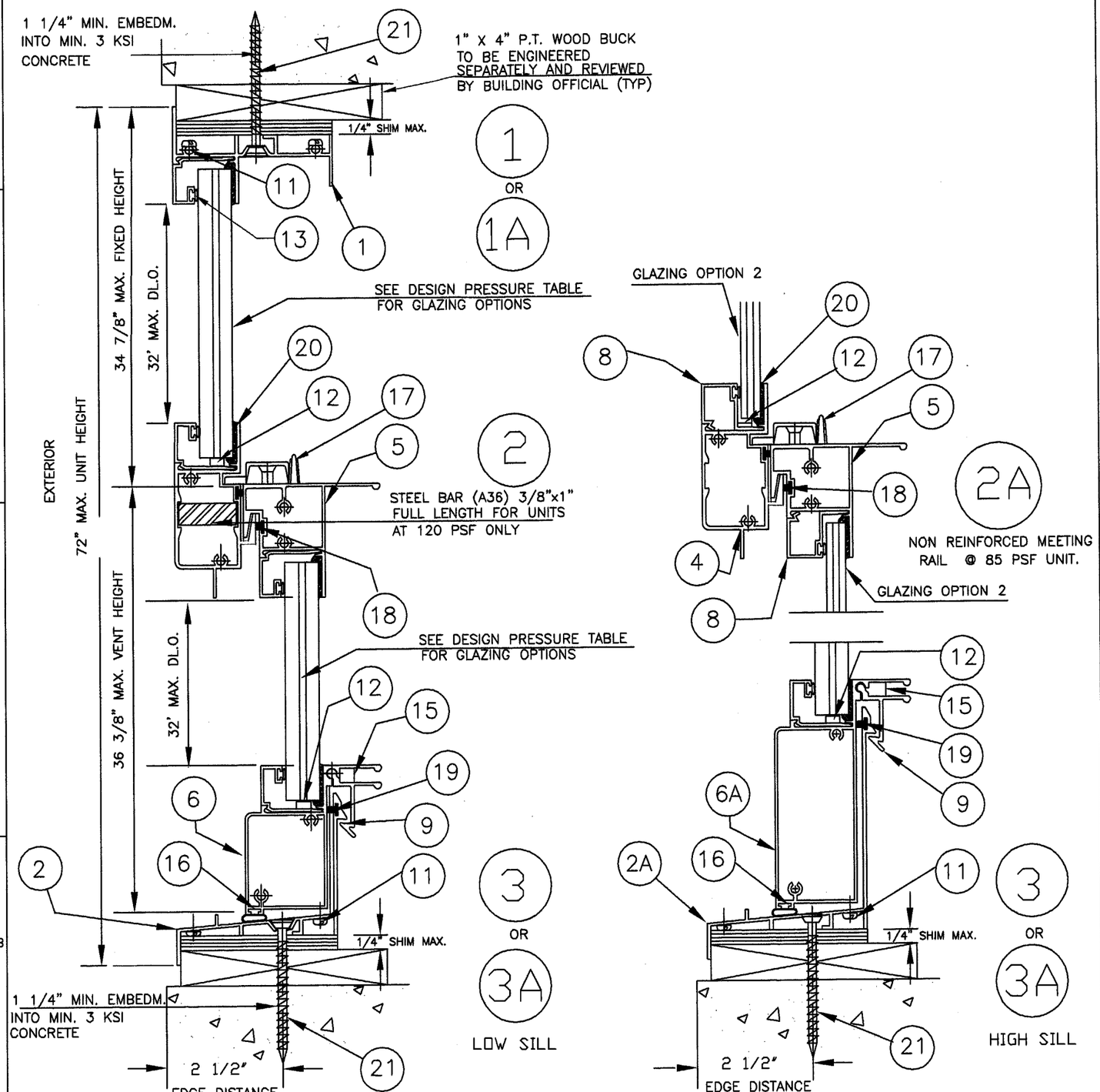

MIAMI WALL SYSTEMS, INC.
701 WEST 25 STREET.
HIALEAH, FL. 33010
TEL. (305) 888 2300

SERIES: 122 ALUMINUM SINGLE HUNG WINDOW SMALL MISSILE IMPACT

DATE: 3/10/03
DWG. BY: J.C.
SCALE: N/A

DWG. NO.: 122-004

SHEET 2 OF 4

NO.	DATE	
1	05/06/03	AS PER DADE COUNTY
2	07/11/03	AS PER DADE COUNTY
3	11/07/03	ADD VENT & FRAME SILL

REVISIONS DESCRIPTION

SIFANG ZHAO
P.E. 50685
STRUCTUAL ENGINEER

12/8/03

PRODUCT REVISED
to complying with the Florida Building Code
Acceptance No. 03-1008.04
Expiration Date AUG 29, 2008
By Ishaq I. Chanda
Miami Dade Product Control Division

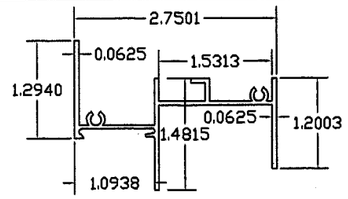

122-003
PART # 3

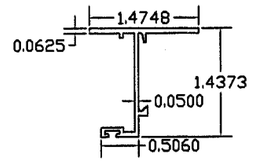

122-007
PART # 7

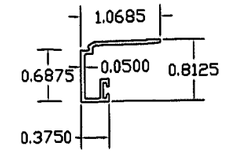

122-010
PART # 10

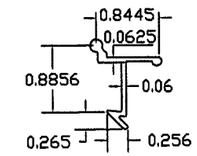

122-009
PART # 9

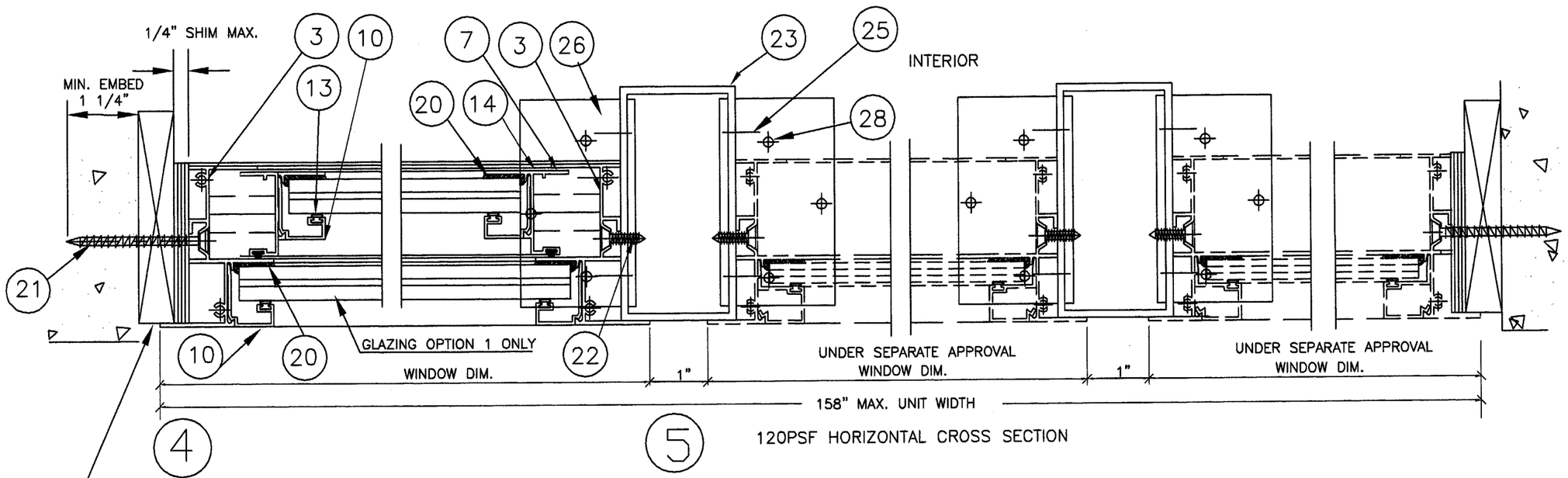

4 5 120PSF HORIZONTAL CROSS SECTION

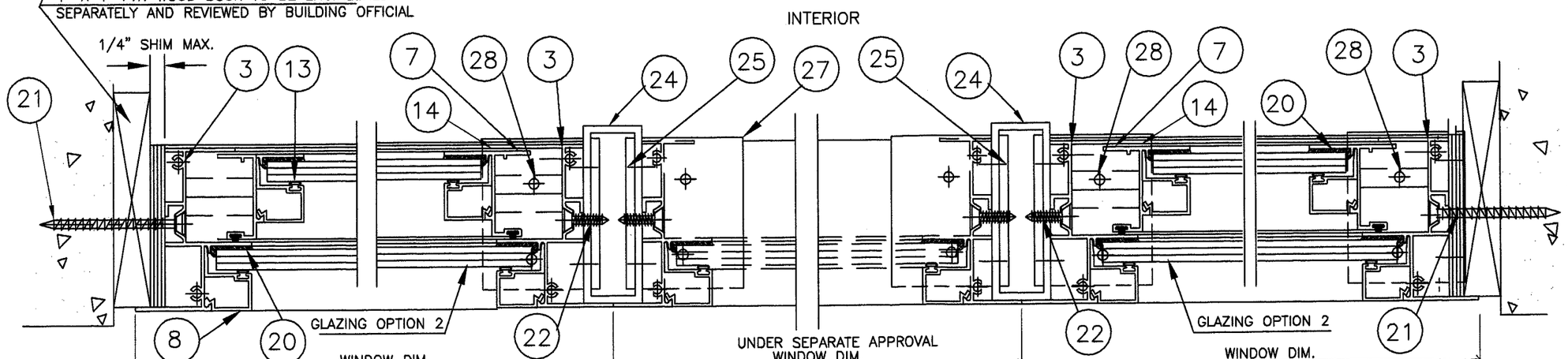

4A 6A 85PSF HORIZONTAL CROSS SECTION 6A 4A

MIAMI WALL SYSTEMS, INC.
701 WEST 25 STREET.
HIALEAH, FL. 33010
TEL. (305) 888 2300

SERIES: 122 ALUMINUM SINGLE HUNG WINDOW SMALL MISSILE IMPACT

DATE: 3/10/03
DWG. BY: J.C.
SCALE: N/A

DWG. NO.: 122-004

SHEET 3 OF 4

NO.	DATE	
1	05/06/03	AS PER DADE COUNTY
2	07/11/03	AS PER DADE COUNTY
3	11/07/03	ADD VENT & FRAME SILL

REVISIONS DESCRIPTION

SIFANG ZHAO
P.E. 50685
STRUCTUAL ENGINEER

12/8/03

PRODUCT REVISED
as complying with the Florida Building Code
Acceptance No 03-1008.04
Expiration Date AUG 29, 2008
By Ishaq I. Chanda
Miami Dade Product Control Division

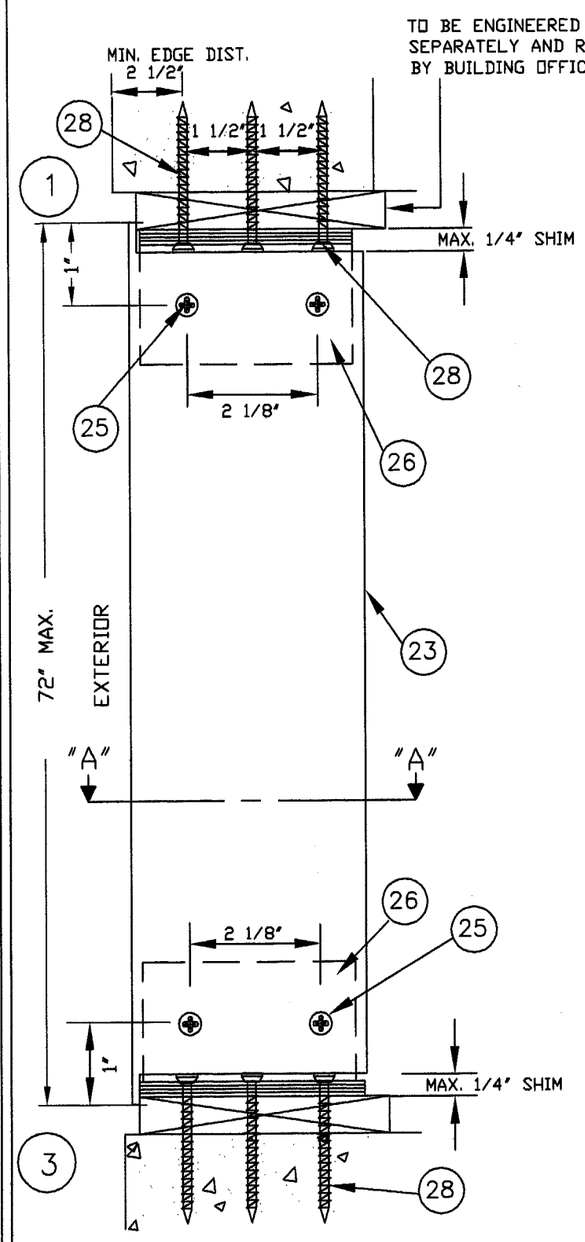

2" X 4" MULLION TO BE USED WITH
DP: 120 PSF (POSITIVE & NEGATIVE)

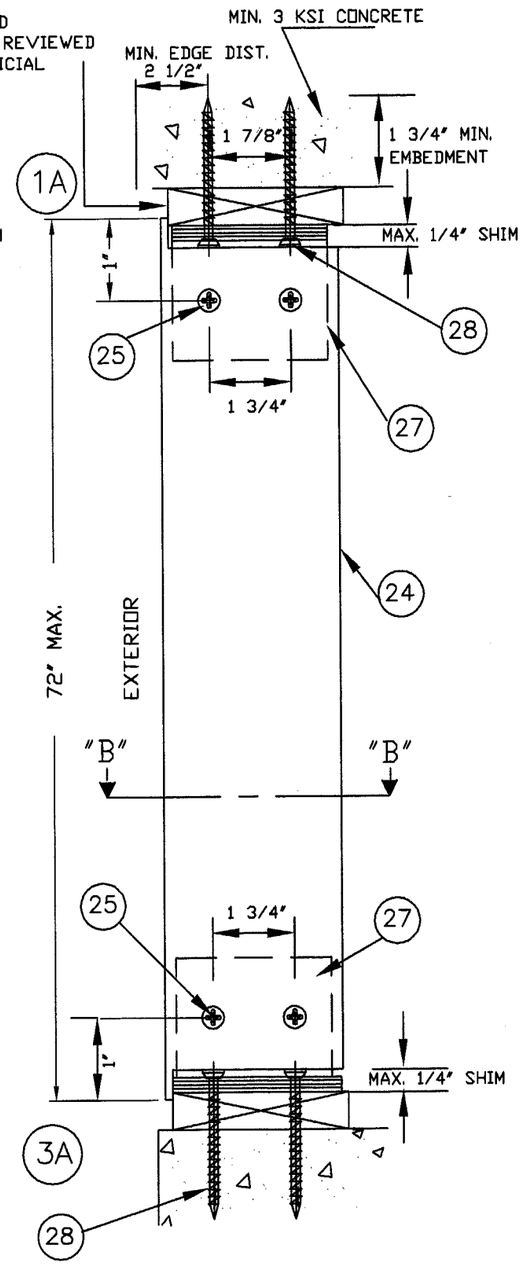

1" X 3" MULLION TO BE USED WITH
DP: 85 PSF (POSITIVE & NEGATIVE)

ITEM NO.	PART NO.	REQUIRED	PART NAME	REMARKS
1	122-001	1	HEAD ALUM. 6005 T-5	
2	122-002	1	LOW SILL ALUM. 6005 T-5	
2A	122-002A	1	HIGH SILL ALUM. 6005 T-5	UP GRADE
3	122-003	2	JAMB ALUM. 6005 T-5	
4	122-004	1	MEETING RAIL ALUM. 6005 T-5	
5	122-005	1	VENT TOP ALUM. 6005 T-5	
6	122-006	1	LOW VENT BOTTOM 6005 T-5	
6A	122-006A	1	HIGH VENT BOTTOM 6005 T-5	UP GRADE
7	122-007	2	VENT JAMB ALUM. 6005 T-5	
8	122-008	8	GLAZING BEAD ALUM. 6005 T-5	1/4" & 5/16 GLASS TK.
9	122-009	2	LOCK ALUM. 6005 T-5	AT BOTTOM RAIL
10	122-010		GLAZING BEAD	7/16" & 9/16" GLASS TK.
11		12	FRAME ASSEMBLY SCREWS	#8 X 1 1/4" PHSMS S/S
12		2 PER SILL	SETTING BLOCK (NEOPRENE)	1/8" X 1/4" X 4"
13	122-101	4	BEAD BULB VINYL	
14	122-150	4/VENT	HORIZ. VENT GUIDE	
15	122-151	2/VENT	LOCK SPRING	
16		16	BOTTOM VENT BULB VINYL	
17		2/VENT	CAM LOCK BY MWS	
18			FIN SEAL .180 HIGH	
19			FIN SEAL .25 HIGH	
20			GLAZING SILICONE	GE 4000, DOW CORNING 995, GE 2800
21		SEE ELEV.	INSTALLATION FASTENERS ITW	1/4" FH ITW TAPCONS
22		SEE ELEV.	JAMB/MULLION FASTENERS	#12 x 3/4" FH SMS
23			2" X 4" X 1/8" ALUM TUBE ALUM. 6063-T5	TESTED AT 120 psf
24			1" X 3" X 1/8" ALUM TUBE ALUM. 6063-T5	TESTED AT 90 psf
25		2/CLIP	ANGLE/MULLION FASTENERS	#12 x 3/4" FH GRADE 5
26			ANGLE CLIP (120 PSF) ALM. 6063 T-5	
27			ANGLE CLIP (85.0 PSF) ALM. 6063 T-5	
28			MULLION ANGLE INSTALATIONS FASTENERS 1/4" ITW	

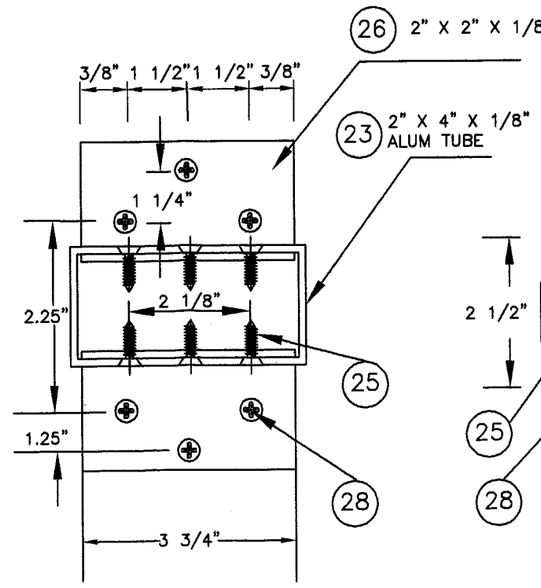

SECTION A-A

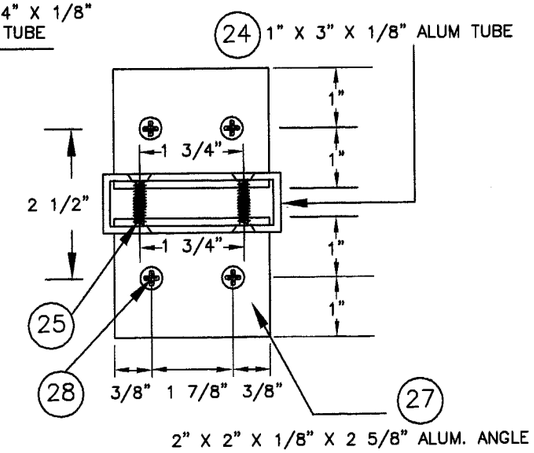

SECTION B-B

MIAMI WALL SYSTEMS, INC.
701 WEST 25 STREET.
HIALEAH, FL. 33010
TEL. (305) 888 2300

SERIES: 122 ALUMINUM SINGLE HUNG WINDOW SMALL MISSILE IMPACT

DATE: 3/10/03
DWG. BY: J.C.
SCALE: N/A

DWG. NO.: 122-004

SHEET 4 OF 4

NO.	DATE	
1	05/06/03	AS PER DADE COUNTY
2	07/11/03	AS PER DADE COUNTY
3	11/07/03	ADD VENT & FRAME SILL

REVISIONS DESCRIPTION

SIFANG ZHAO
P.E. 50685
STRUCTUAL ENGINEER

12/8/03

PRODUCT REVISED
as complying with the Florida Building Code
Acceptance No. 03-1008.04
Expiration Date AUG 29, 2008
By Ishaq I. Chanda
Miami Dade Product Control Division