MIAMI-DADE

BUILDING CODE COMPLIANCE OFFICE (BCCO)
PRODUCT CONTROL DIVISION

MIAMI-DADE COUNTY, FLORIDA
METRO-DADE FLAGLER BUILDING
140 WEST FLAGLER STREET, SUITE 1603
MIAMI, FLORIDA 33130-1563
(305) 375-2901 FAX (305) 375-2908

NOTICE OF ACCEPTANCE (NOA)

Raynor GarageDoors.
1101 East River Road
Dixon IL 61021

SCOPE: This NOA is being issued under the applicable rules and regulations governing the use of construction materials. The documentation submitted has been reviewed by Miami-Dade County Product Control Division and accepted by the Board of Rules and Appeals (BORA) to be used in Miami Dade County and other areas where allowed by the Authority Having Jurisdiction (AHJ).

This NOA shall not be valid after the expiration date stated below. The Miami-Dade County Product Control Division (In Miami Dade County) and/or the AHJ (in areas other than Miami Dade County) reserve the right to have this product or material tested for quality assurance purposes. If this product or material fails to perform in the accepted manner, the manufacturer will incur the expense of such testing and the AHJ may immediately revoke, modify, or suspend the use of such product or material within their jurisdiction. BORA reserves the right to revoke this acceptance, if it is determined by Miami-Dade County Product Control Division that this product or material fails to meet the requirements of the applicable building code. This product is approved as described herein, and has been designed to comply with the High Velocity Hurricane Zone of the Florida Building Code.

DESCRIPTION: Sectional Garage Door 16'- 0" Wide.

APPROVAL DOCUMENT: Drawing No. P-1278, titled "Spec. Windload Decade Showcase 16' 0" Wide", dated 06/27/94 with last revision on 10/31/00, sheets 1 of 1, prepared by Raynor Garage Doors, signed and sealed by R. A. Baumann, P.E., bearing the Miami-Dade County Product Control Renewal stamp with the Notice of Acceptance number and expiration date by the Miami-Dade County Product Control Division.

MISSILE IMPACT RATING: Large and Small Missile Impact

LABELING: Each unit shall bear a permanent label with the manufacturer's name or logo, city, state and following statement: "Miami-Dade County Product Control Approved", unless otherwise noted herein.

RENEWAL of this NOA shall be considered after a renewal application has been filed and there has been no change in the applicable building code negatively affecting the performance of this product.

TERMINATION of this NOA will occur after the expiration date or if there has been a revision or change in the materials, use, and/or manufacture of the product or process. Misuse of this NOA as an endorsement of any product, for sales, advertising or any other purposes shall automatically terminate this NOA. Failure to comply with any section of this NOA shall be cause for termination and removal of NOA.

LIMITATION: This approval requires the manufacturer to do testing of all coils used to fabricate door panels under this Notice of Acceptance. A minimum of 2 specimens shall be cut from each coil and tensile tested according to ASTM E-8 by a Dade County approved laboratory selected and paid by the manufacturer. Every 3 months, four times a year, the manufacturer shall mail to this office: a copy of the tested reports with confirmation that the specimen were selected from coils at the manufacturer production facilities. And a notarized statement from the manufacturer that only coils with yield strength of 33000 psi or more shall be used to make door panels for Dade County under this Notice of Acceptance

ADVERTISEMENT: The NOA number preceded by the words Miami-Dade County, Florida, and followed by the expiration date may be displayed in advertising literature. If any portion of the NOA is displayed, then it shall be done in its entirety.

INSPECTION: A copy of this entire NOA shall be provided to the user by the manufacturer or its distributors and shall be available for inspection at the job site at the request of the Building Official.

This NOA renews NOA # 00-0919.08 and consists of this page, evidence page as well as the approval document mentioned above.

The submitted documentation was reviewed by **Candido F. Font PE.**

12/11/03

PRODUCT CONTROL ACCEPTED

NOA No 03-1030.01
Expiration Date: November 20, 2008
Approval Date: December 11, 2003

Raynor Garage Doors.

NOTICE OF ACCEPTANCE: EVIDENCE PAGE

A. DRAWINGS

1. *Drawing prepared by Raynor Garage Doors, titled "SPEC. WINDLOAD DECADE SERIES 16' 0" WIDE", Drawing No. P1278, dated 06/27/94, with last revision on 10/31/00, sheets 1 of 1, signed and sealed by R. A. Baumann, PE.*

B. TESTS

1. *Test report of large missile impact test per PA 201 and cyclic wind pressure test per PA 203 on "Garage Door. 16' W x 8' H." prepared by Hurricane Engineering & Testing, Inc., report No. HETI 94-162, dated 06/22/94, signed and sealed by A. Viqar, PE.*
2. *Test report of uniform static air pressure test per PA 202 on a "Garage Door. 16' W x 8' H." prepared by Hurricane Engineering & Testing, Inc., report No. HETI 94-160, dated 06/21/94, signed and sealed by A. Viqar, PE.*

C. CALCULATIONS

1. *Calculations prepared by Raynor Garage Doors page 1, signed and sealed by R. A. Baumann PE, on 08/08/94.*

D. QUALITY ASSURANCE.

1. *Miami-Dade Product Control Office.*

E. MATERIAL CERTIFICATIONS

1. *Test report of Tensile test per ASTM E8 prepared by Hurricane Engineering & Testing, Inc. on 09/23/00, signed and sealed by H. M. Medina, PE.*
2. *Test report of Ignition of plastic test per ASTM D1929, prepared by U. S. Testing Co., Inc. on 08/28/87, signed by J. Lomash.*
3. *Underwriters Laboratories report card No. R6705 (N) for Flame Spread & Smoke Developed of Falcon Foam with no date.*

F. STATEMENTS.

1. *Letter confirming that Raynor Garage Doors, Decade Series have not changed on any item or design since its previous approval, issued by Raynor Garage Door on 09/07/00 singed by G. Wedekind.*
2. *Letter of door production within the yield strength tolerance, prepared by Raynor Garage Door on 11/20/00, signed by G. Wedekind and notarized by P. J. Willard.*
3. *No change letter issued by Raynor Garage Door on 10/27/03, signed by G. Wedekind and notarized by S. M. Salsbury.*
4. *Tensile test and affidavit prepared by Heti and Raynor on 09/18/03 and 10/21/03 & signed by R. E. Droz-Seda and G. Wedekind.*

12/11/03

Candido F. Font, PE.
Senior Product Control Division
NOA No 03-1030.01
Expiration Date: November 20, 2008
Approval Date: December 11, 2003

JAMBS

2 X 6 #1 SYP WOOD JAMB SHALL BE ANCHORED TO GROUT REINFORCED BLOCK WALL OR CONCRETE COLUMN WITH 1/4" X 2-3/4" LONG TAPCON 6" O.C. FOR DOORS UP TO 16'-0" WIDE.
BLOCK WALL CELLS SHALL BE FILLED WITH CONCRETE AND REINFORCED WITH #5 BARS EXTENDING INTO FOOTING AND INTO THE BEAMS. ALL BARS SHALL BE CONTINUOUS FROM THE BEAMS TO FOOTING.
FOR DOORS OVER 9'-0" WIDE PROVIDE TIE COLUMNS.

JAMB CONSTRUCTION TO BE PROVIDED BY OTHERS.

STEEL SECTION

.016" GALVANIZED STEEL PANELS: DQSK STEEL 33000 PSI MINIMUM YIELD STRENGTH
INTERIOR AND EXTERIOR SKINS ARE WOOD GRAIN EMBOSSED,
ROLL-FORMED AND EMBOSSED WITH THE FOLLOWING DESIGNS:
1) DECADE COLONIAL- 14-3/4" X 19-15/16" RAISED PANELS
2) DECADE RANCH- 14-3/4" X 42-7/8" RAISED PANELS
3) DECADE R/S - ROUGH SAWN FLUSH
AND FINISHED WITH WHITE, BROWN OR ALMOND, BAKED ON POLYESTER ENAMEL

ROUGH OPENING 16'-0"

FINISHED OPENING 15'-11"

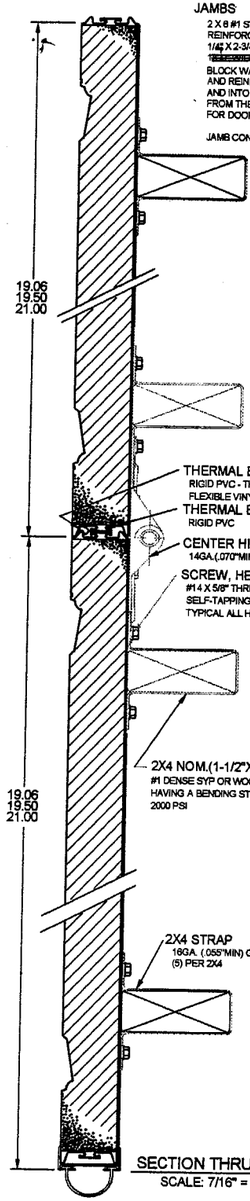

SECTION THRU DETAIL
SCALE: 7/16" = 1"

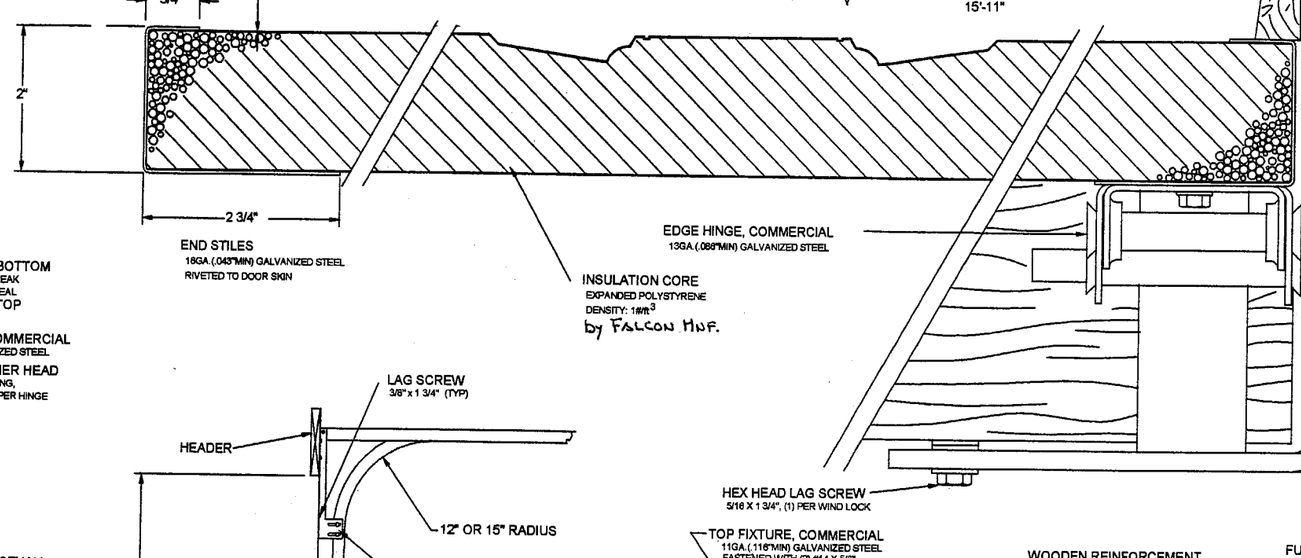

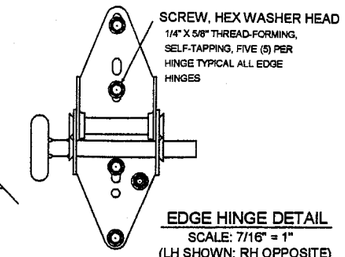

EDGE HINGE DETAIL
SCALE: 7/16" = 1"
(LH SHOWN; RH OPPOSITE)

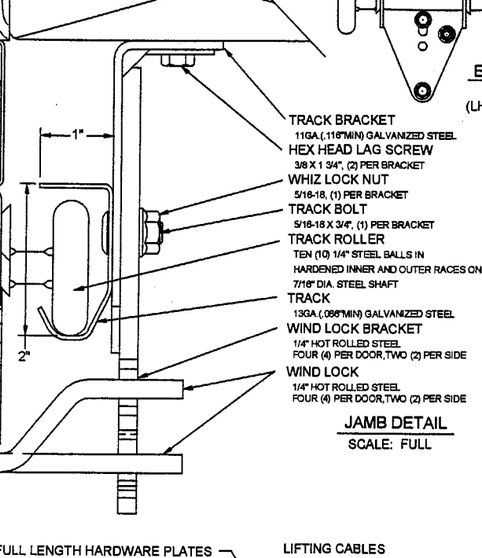

JAMB DETAIL
SCALE: FULL

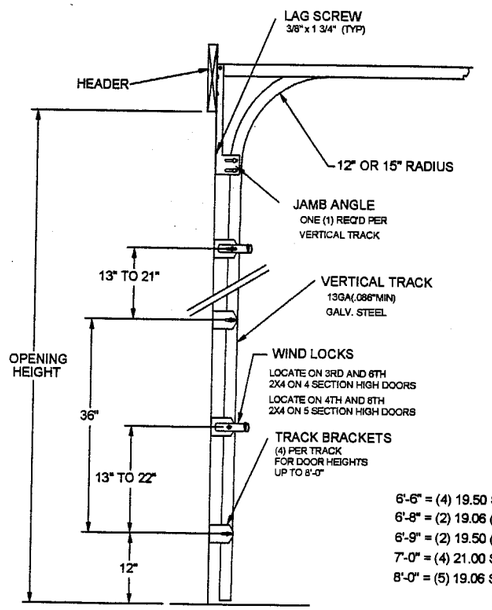

TYPICAL TRACK INSTALLATION
SCALE: 1"= 12.5"

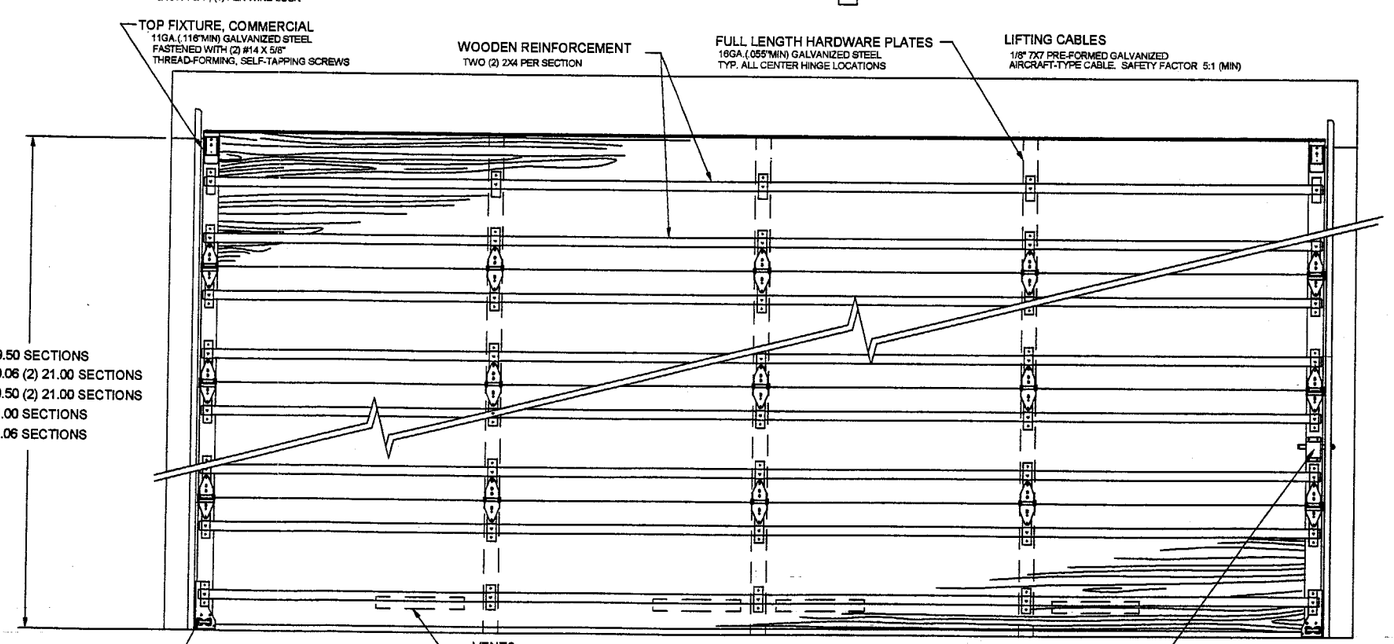

INTERIOR ELEVATION
SCALE 1"= 12.5"

DESIGN LOAD
+42 P.S.F.
- 52 P.S.F.

LARGE MISSLE
IMPACT RESISTANCE

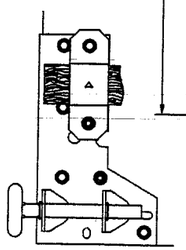

CORNER BRACKET DETAIL
SCALE: 7/16" = 1"
(LH SHOWN, RH OPPOSITE)

THIS SPACE FOR DADE COUNTY USE ONLY

PRODUCT RENEWED
as complying with the Florida
Building Code
Product Control No. 03-1030.01
Expiration Date 11/20/08
By
Miami Dade Product Control
Division

SEAL

OCT 24, 2003
EXPIRES 2-28-05
REGISTERED ENGINEER: RICHARD BAUMANN
ENGINEERING DISCIPLINE: STRUCTURAL ENGINEERING
STATE REGISTRATION NUMBER: 0036469

REV.	DESCRIPTION	ECN. NO.	DATE
B	ADDED LARGE MISSLE NOTE, REMOVED TEST LOAD	3864	10/31/00
A	ADDED SECTION HEIGHT AND YIELD STRENGTH		10/13/97

SCALE: NOTED
DRAWN BY: G.WEDEKIND
CHECKED BY: GW
DATE: 08/27/94
ECN. NO.:

RAYNOR GARAGE DOORS
5924 445 EAST RIVER ROAD
DIXON, ILL. 61021

TITLE: SPEC, WIND LOAD DECADE SHOWCASE 16' 0" WIDE

NO. P-1278 | SHEET 1 OF 1 | REV B