MIAMI-DADE

BUILDING CODE COMPLIANCE OFFICE (BCCO)
PRODUCT CONTROL DIVISION

MIAMI-DADE COUNTY, FLORIDA
METRO-DADE FLAGLER BUILDING
140 WEST FLAGLER STREET, SUITE 1603
MIAMI, FLORIDA 33130-1563
(305) 375-2901 FAX (305) 375-2908

NOTICE OF ACCEPTANCE (NOA)

Universal Aluminum Windows & Doors, Inc.
1675 West 31st Place
Hialeah, FL 33012

SCOPE:

This NOA is being issued under the applicable rules and regulations governing the use of construction materials. The documentation submitted has been reviewed by Miami-Dade County Product Control Division and accepted by the Board of Rules and Appeals (BORA) to be used in Miami Dade County and other areas where allowed by the Authority Having Jurisdiction (AHJ).

This NOA shall not be valid after the expiration date stated below. The Miami-Dade County Product Control Division (In Miami Dade County) and/or the AHJ (in areas other than Miami Dade County) reserve the right to have this product or material tested for quality assurance purposes. If this product or material fails to perform in the accepted manner, the manufacturer will incur the expense of such testing and the AHJ may immediately revoke, modify, or suspend the use of such product or material within their jurisdiction. BORA reserves the right to revoke this acceptance, if it is determined by Miami-Dade County Product Control Division that this product or material fails to meet the requirements of the applicable building code.

This product is approved as described herein, and has been designed to comply with the Florida Building Code, including the High Velocity Hurricane Zone.

DESCRIPTION: Series 1000 Aluminum Single Hung Window

APPROVAL DOCUMENT: Drawing No. **W99-51**, dated 07/02/99, with revision A dated 10/09/03, titled "S-1000 Aluminum Single Hung Window", sheets 1 through 4, prepared by Al-Farooq Corporation, signed and sealed by Humayoun Farooq, P.E., bearing the Miami-Dade County Product Control Renewal stamp with the Notice of Acceptance number and expiration date by the Miami-Dade County Product Control Division.

MISSILE IMPACT RATING: None

LABELING: Each unit shall bear a permanent label with the manufacturer's name or logo, city, state and following statement: "Miami-Dade County Product Control Approved", unless otherwise noted herein.

RENEWAL of this NOA shall be considered after a renewal application has been filed and there has been no change in the applicable building code negatively affecting the performance of this product.

TERMINATION of this NOA will occur after the expiration date or if there has been a revision or change in the materials, use, and/or manufacture of the product or process. Misuse of this NOA as an endorsement of any product, for sales, advertising or any other purposes shall automatically terminate this NOA. Failure to comply with any section of this NOA shall be cause for termination and removal of NOA.

ADVERTISEMENT: The NOA number preceded by the words Miami-Dade County, Florida, and followed by the expiration date may be displayed in advertising literature. If any portion of the NOA is displayed, then it shall be done in its entirety.

INSPECTION: A copy of this entire NOA shall be provided to the user by the manufacturer or its distributors and shall be available for inspection at the job site at the request of the Building Official.

This NOA **revises and renews NOA # 00-0920.01** and consists of this page 1 and evidence pages E-1 and E-2, as well as approval document mentioned above.

The submitted documentation was reviewed by **Manuel Perez, P.E.**

PRODUCT CONTROL ACCEPTED

NOA No 03-1104.02
Expiration Date: November 03, 2008
Approval Date: February 19, 2004

Universal Aluminum Windows & Doors, Inc.

NOTICE OF ACCEPTANCE: EVIDENCE SUBMITTED

A. DRAWINGS

1. Manufacturer's die drawings and sections.
2. Drawing No **W99-51**, Sheets 1 through 4 of 4, titled "S-1000 Aluminum Single Hung Window", dated 07/02/99 with revision A dated 10/09/03, prepared by Al-Farooq Corporation, signed and sealed by Humayoun Farooq, P.E.

B. TESTS

1. Test reports on 1) Air Infiltration Test, per PA 202-94
   2) Uniform Static Air Pressure Test, Loading per PA 202-94
   3) Water Resistance Test, per PA 202-94
   4) Forced Entry Resistance Test, per AAMA 1302.5-76.

   along with installation diagram of an aluminum single hung window with 1/8" glazing and standard vent top rail , one specimen, prepared by Fenestration Testing Laboratory report No. **FTL-1384** dated February 14, 1996, signed and sealed by Gilbert Diamond, P.E.
2. Test reports on 1) Air Infiltration Test, per PA 202-94
   2) Uniform Static Air Pressure Test, Loading per PA 202-94
   3) Water Resistance Test, per PA 202-94
   4) Forced Entry Resistance Test, per AAMA 1302.5-76.

   along with installation diagram of an aluminum single hung window with 3/16" glazing and mid-rise vent top rail, 3 specimens, prepared by Fenestration Testing Laboratory report No. **FTL-1056** dated October 21, 1994 reissued December 28, 1994, signed and sealed by Yamil G. Kuri, P.E.
3. Test reports on 1) Air Infiltration Test, per PA 202-94
   2) Uniform Static Air Pressure Test, Loading per PA 202-94
   3) Water Resistance Test, per PA 202-94
   4) Forced Entry Resistance Test, per AAMA 1302.5-76.

   along with installation diagram of an aluminum single hung window with 3/16" glazing and hi-rise vent top rail, 3 specimens, prepared by Fenestration Testing Laboratory report No. **FTL-1057** dated October 21, 1994 reissued December 28, 1994, signed and sealed by Yamil G. Kuri, P.E.

C. CALCULATIONS

1. Anchor calculations and comparative analysis, sheets 1 thru 4 of 4, prepared by Al-Farooq Corp. on 06/30/99 and revised on 10/8/03, signed and sealed by Humayoun Farooq, P.E.. (Complies with ASTM E1300 requirements)

D. QUALITY ASSURANCE

1. Miami Dade Building Code Compliance Office (BCCO).

Manuel Perez

Manuel Perez, P.E.
Product Control Examiner
NOA No 03-1104.02
Expiration Date: November 03, 2008
Approval Date: February 19, 2004

D. MATERIAL CERTIFICATIONS

1. None.

E. STATEMENTS

1. Statement letter of compliance, dated June 30, 1999, signed and sealed by Humayoun Farooq, P.E.
2. Statement letter of no financial interest, June 30, 1999, signed and sealed by Humayoun Farooq, P.E.

G. OTHER

1. Notice of Acceptance No. **00-0920.01**, issued to Universal Windows & Doors, Inc. for their Series 1000 Aluminum Single Hung Window, approved on 11/03/2000 and expiring on 11/03/03.

Manuel Perez, P.E.
Product Control Examiner
NOA No 03-1104.02
Expiration Date: November 03, 2008
Approval Date: February 19, 2004

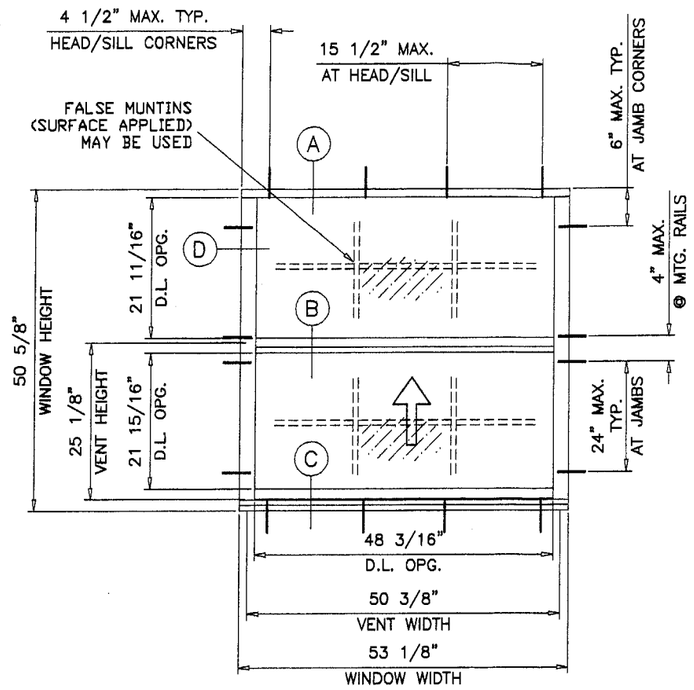

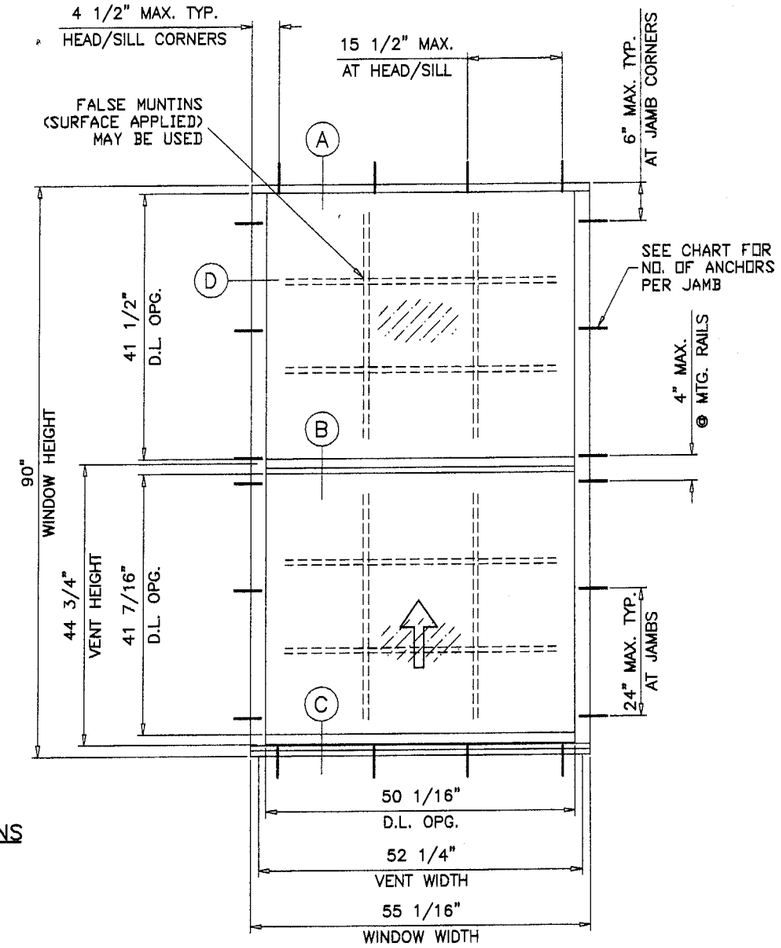

TYPICAL ELEVATIONS
TESTED UNITS

DESIGN LOAD CAPACITY - PSF									
		DSB ANN. GLASS		3/16" ANN. GLASS				3/16" TEMP. GLASS	
		STD. TOP RAIL		MID-RISE TOP RAIL				HI-RISE TOP RAIL	
WINDOW DIMS.		3/16" TAPCONS		3/16" TAPCONS		1/4" TAPCONS		1/4" TAPCONS	
WIDTH	HEIGHT	EXT. (+)	INT. (-)	EXT. (+)	INT. (-)	EXT. (+)	INT. (-)	EXT. (+)	INT. (-)
19-1/8"		78.4	78.4	93.3	125.0	93.3	125.0	93.3	210.0
26-1/2"	26"	78.4	78.4	93.3	125.0	93.3	125.0	93.3	210.0
37"	(4) *	78.4	78.4	93.3	125.0	93.3	125.0	93.3	210.0
53-1/8		78.4	78.4	92.1	92.1	93.3	125.0	93.3	164.1
19-1/8"		78.4	78.4	93.3	125.0	93.3	125.0	93.3	210.0
26-1/2"	38-3/8"	78.4	78.4	93.3	103.1	93.3	125.0	93.3	210.0
37"	(4)	62.9	62.9	79.9	79.9	93.3	125.0	93.3	168.8
53-1/8		45.9	45.9	59.4	59.4	93.3	106.8	93.3	119.1
19-1/8"		78.4	78.4	90.9	90.9	93.3	125.0	93.3	192.2
26-1/2"	50-5/8"	72.1	72.1	72.1	72.1	93.3	125.0	93.3	152.3
37"	(4)	56.8	56.8	56.8	56.8	93.3	93.6	93.3	120.1
53-1/8		33.3	33.3	42.9	42.9	64.2	64.2	90.6	90.6
19-1/8"		78.4	78.4	93.3	118.1	93.3	125.0	93.3	210.0
26-1/2"	56"	69.3	69.3	92.4	92.4	93.3	122.2	93.3	195.3
37"	(6)	51.7	51.7	73.3	73.3	83.6	83.6	93.3	153.4
53-1/8		–	–	55.8	55.8	56.9	56.9	89.8	89.8
19-1/8"		78.4	78.4	93.3	104.8	93.3	125.0	93.3	210.0
26-1/2"	63"	63.3	63.3	81.3	81.3	93.3	107.9	93.3	171.7
37"	(6)	47.9	47.9	64.5	64.5	76.6	76.6	93.3	136.2
53-1/8		–	–	49.4	49.4	51.3	51.3	84.5	84.5
19-1/8"		67.1	67.1	86.6	86.6	93.3	125.0	93.3	183.0
26-1/2"	74-1/4"	51.4	51.4	66.3	66.3	90.6	90.6	93.3	140.0
37"	(6)	–	–	51.9	51.9	67.1	67.1	93.3	109.7
53-1/8		–	–	40.3	40.3	48.2	48.2	77.5	77.5

* NO. IN PARENTHESIS INDICATE NO. OF ANCHORS PER JAMB.

NOTES:

1. THIS PRODUCT IS DESIGNED TO COMPLY WITH THE HIGH VELOCITY HURRICANE ZONE OF THE 2001 FLORIDA BUILDING CODE.
   ALSO FOR WIND LOADS AS PER ASCE 7-88. ASCE 7-93, ASCE 7-95 OR ASCE 7-98 AS REQUIRED BY PREVAILING BUILDING CODE.
2. WOOD BUCKS BY OTHERS, MUST BE ANCHORED PROPERLY TO TRANSFER LOADS TO THE STRUCTURE.
3. ANCHORS SHALL BE AS LISTED, SPACED AS SHOWN ON DETAILS. ANCHOR EMBEDMENT TO BASE MATERIAL SHALL BE BEYOND WALL DRESSING OR STUCCO.

WINDOWS TO BE PROTECTED WITH
MIAMI-DADE COUNTY APPROVED
IMPACT RESISTANT SHUTTERS

Engr: DR. HUMAYOUN FAROOQ
STRUCTURES
FLA. PE # 16557
C.A.N. 3538

OCT 1 3 2003

PRODUCT RENEWED
as complying with the Florida Buiding Code
Acceptance No 03-1104.02
Expiration Date Nov. 3, 2008
By Manuel Perez
Miami-Dade Product Control Division

AL-FAROOQ CORPORATION
ENGINEERS, PLANNERS & PRODUCT DESIGN
1235 SW 87 AVE
MIAMI, FLORIDA 33174
TEL. (305) 264-8100 FAX. (305) 262-6978

COMP-ANL\W99-51UW

S-1000 ALUMINUM SINGLE HUNG WINDOW

UNIVERSAL ALUMINUM WINDOWS
1675 W. 31ST PLACE
HIALEAH, FL. 33012
TEL (305) 825-7900 FAX (305) 825-5805

revisions:			
no	date	by	description
A	10.09.03		CHART REV. PER ASTM E-1300

date: 07-02-99
scale: 1/2" = 1"
dr. by: HAMID
chk. by:

drawing no.
W99-51

sheet 1 of 4

WOOD BUCKS NOT BY UNIVERSAL, MUST SUSTAIN LOADS IMPOSED BY GLAZING SYSTEM AND TRANSFER THEM TO THE BUILDING STRUCTURE.

SEALANT:

FRAME CORNERS, FRAME SILL INSTALLATION SCREWS, VENT CORNER SEAMS AND FIXED MEETING RAIL AT END SEALED WITH WHITE/ALUMINUM COLORED SEALANT.

TYPICAL ANCHORS: SEE ELEV. FOR SPACING

3/16" DIA. OR 1/4" DIA. TAPCONS (BY ELCO) OR EQUIV. CONC. ANCHOR HOLDING CURRENT NOTICE OF ACCEPTANCE.

INTO 2BY WOOD BUCKS OR WOOD STRUCTURE
1-7/16" MIN. PENETRATION INTO WOOD

THRU 1BY WOOD BUCKS INTO MASONRY OR DIRECTLY INTO MASONRY
1-1/4" MIN. EMBED INTO CONC. OR MASONRY

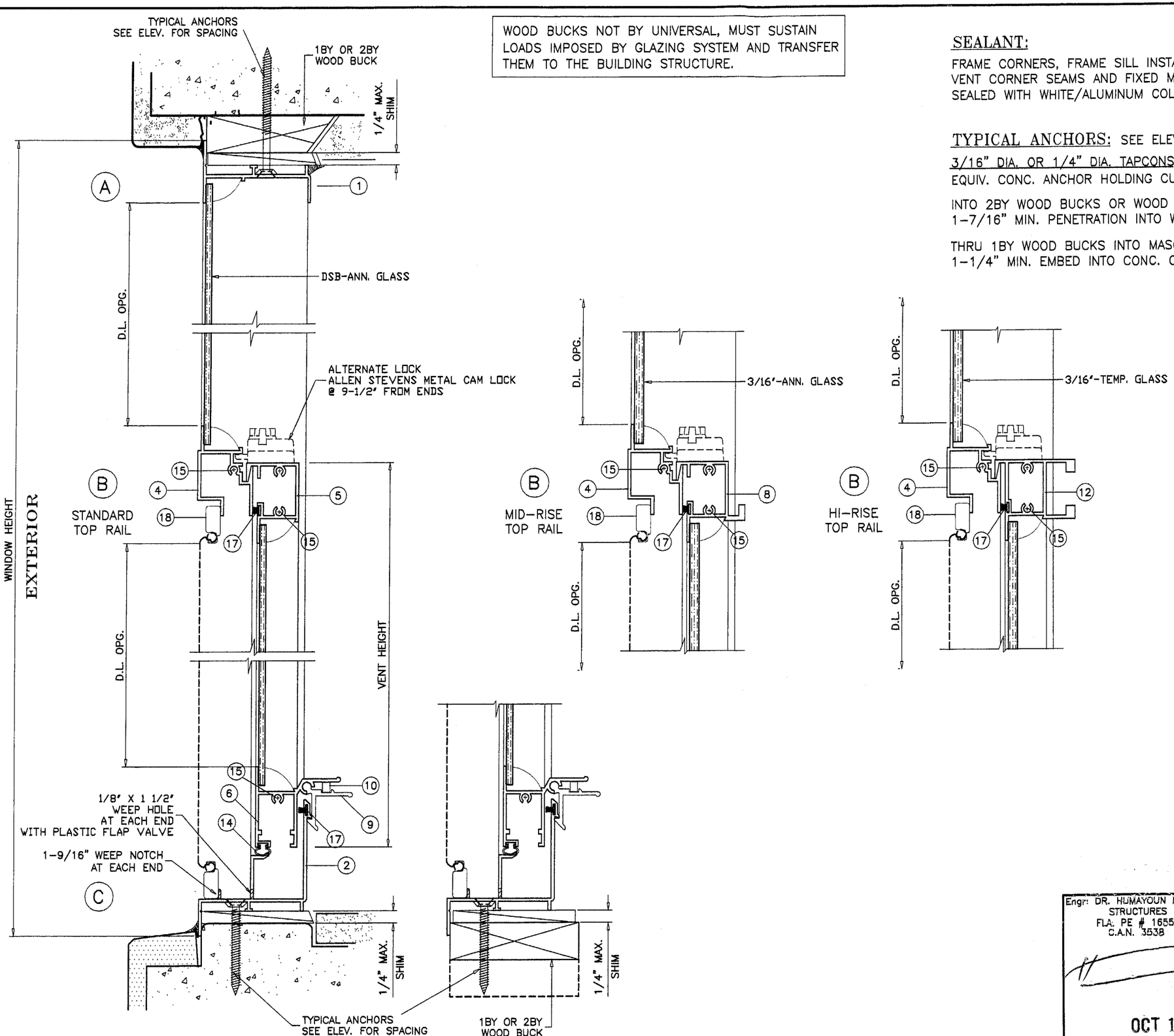

Engr: DR. HUMAYOUN FAROOQ
STRUCTURES
FLA. PE # 16557
C.A.N. 3538

OCT 1 3 2003

PRODUCT RENEWED
as complying with the Florida Building Code
Acceptance No. 03-1104.02
Expiration Date NOV. 3, 2008
By Manuel Inez
Miami Dade Product Control Division

AL-FAROOQ CORPORATION
ENGINEERS, PLANNERS & PRODUCT DESIGN
1235 SW 87 AVE
MIAMI, FLORIDA 33174
TEL. (305) 264-8100 FAX. (305) 262-6978
COMP-ANL\W99-51UW

S-1000 ALUMINUM SINGLE HUNG WINDOW

UNIVERSAL ALUMINUM WINDOWS
1675 W. 31ST PLACE
HIALEAH, FL. 33012
TEL. (305) 825-7900 FAX (305) 825-5805

revisions:

no	date	by	description
A	10.09.03		3/16" TEMP. GLASS ADD.

date: 07-02-99
scale: 1/2" = 1"
dr. by: HAMID
chk. by:

drawing no.
W99-51

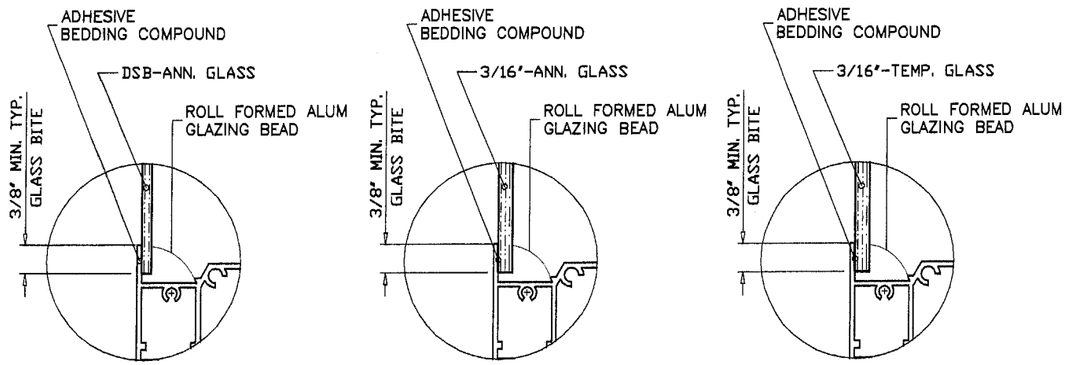

GLAZING OPTIONS

ITEM #	PART #	REQD.	DESCRIPTION	REMARKS
1	UDH-501	1	FRAME HEAD	6063-T5
2	UAWD-519	1	FRAME SILL	6063-T6
3	UDH-503	2	FRAME JAMB	6063-T5
4	UDH-504	1	FIXED MTG. RAIL	6063-T6
5	UDH-505	1	STANDARD VENT TOP RAIL	6063-T6
6	UAWD-526	1	VENT BOTTOM RAIL	6063-T6
7	UDH-507	2	VENT JAMB	6063-T5
8	UDH-508	1	MID-RISE VENT TOP RAIL	6063-T5
9	UAWD-518	2/VENT	5" LONG VENT LATCH @ 9" FROM ENDS	6063-T5
10	UA-5010	1/LATCH	LEAF SPRING	STAINLESS STEEL
11	UA-5011	2/ VENT	BALANCE STOP	6063-T5 (NOT SHOWN)
12	UHS-613	1	HI-RISE VENT TOP RAIL	6005-T6
13	–	AS REQD.	GLAZING BEAD	.008" ROLL FORMED ALUM.
14	UA-5013	AS REQD.	BOTTOM RAIL VINYL	BULB VINYL BY TEAM PLASTICS
15	–	20	ASSEMBLY SCREWS	#10 x 1" P.H. CRS
16	–	2	BLOCK & TACKLE BALANCE	5/8" BOX, BALANCE SYSTEMS INC. OR EQ.
17	–	AS REQD.	PILE WEATHERSTRIP	SCHLEGEL FIN SEAL OR EQUIV.
18	–	1	5/16" BOX SCREEN	OPTIONAL

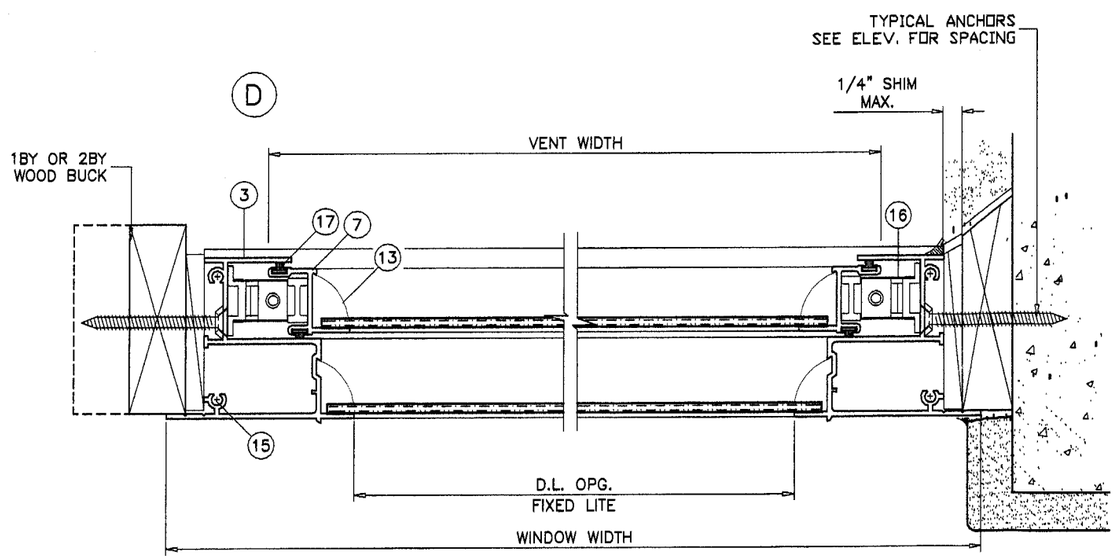

EXTERIOR

Engr: DR. HUMAYOUN FAROOQ
STRUCTURES
FLA. PE # 16557
C.A.N. 3538

OCT 1 3 2003

PRODUCT RENEWED
as complying with the Florida Building Code
Acceptance No. 03-1104.02
Expiration Date Nov. 3, 2008
By Manuel Perez
Miami-Dade Product Control Division

AL-FAROOQ CORPORATION
ENGINEERS, PLANNERS & PRODUCT DESIGN
1235 SW 87 AVE
MIAMI, FLORIDA 33174
TEL. (305) 264-8100 FAX. (305) 262-6978
COMP-ANL\W99-51UW

S-1000 ALUMINUM SINGLE HUNG WINDOW

UNIVERSAL ALUMINUM WINDOWS
1675 W. 31ST PLACE
HIALEAH, FL. 33012
TEL. (305) 825-7900 FAX (305) 825-5805

revisions:

no	date	by	description
A	10.09.03		3/16" TEMP. GLASS ADD.

date: 07-02-99
scale: 1/2" = 1"
dr. by: HAMID
chk. by:

drawing no.
W99-51

sheet 3 of 4

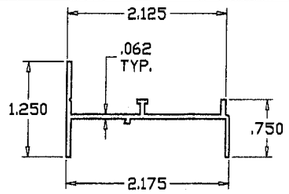

1 FRAME HEAD

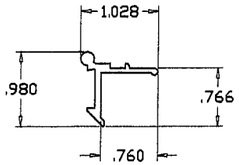

9 VENT LATCH

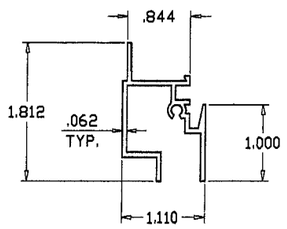

4 MEETING RAIL

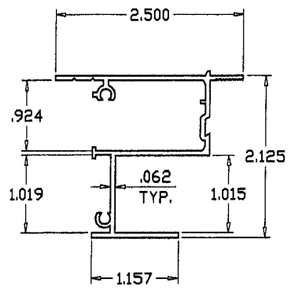

3 FRAME JAMB

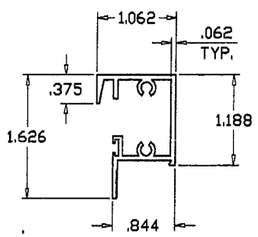

5 STD. VENT TOP RAIL

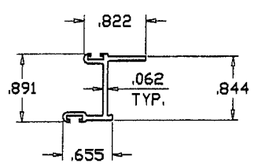

7 VENT SIDE RAIL

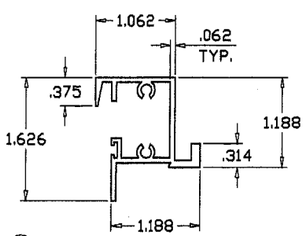

8 MID-RISE VENT TOP RAIL

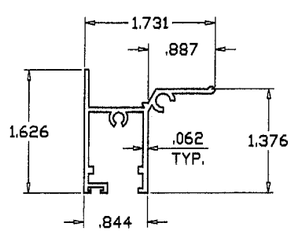

6 VENT BOTTOM RAIL

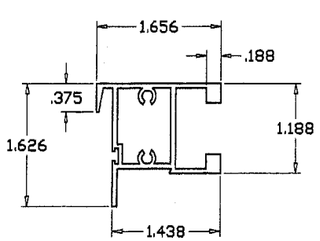

12 HIGH-RISE VENT TOP RAIL

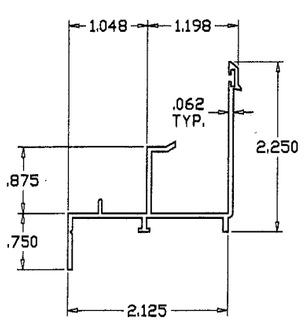

2 FRAME SILL

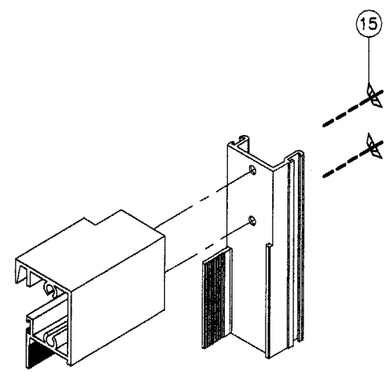

VENT TOP CORNER

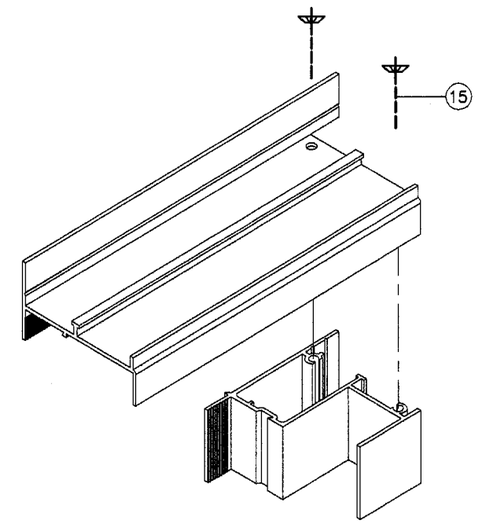

FRAME TOP CORNER

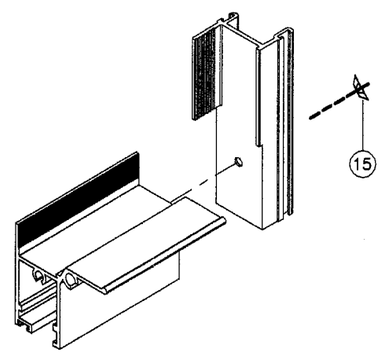

VENT BOTTOM CORNER

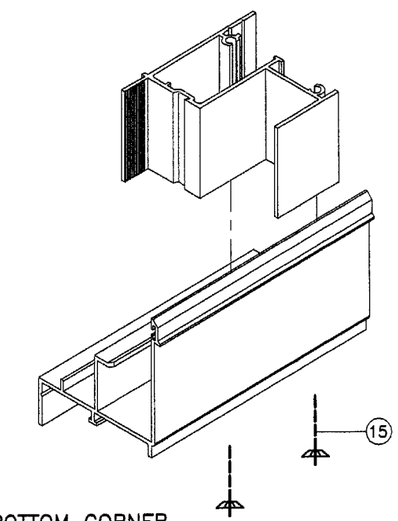

FRAME BOTTOM CORNER

Engr: DR. HUMAYOUN FAROOQ
STRUCTURES
FLA. PE # 16557
C.A.N. 3538

OCT 1 3 2003

PRODUCT RENEWED
as complying with the **Florida** Building Code
Acceptance No. 03-1104.02
Expiration Date NOV 3 2008
By Manuel Perez
Miami Dade Product Control Division

AL-FAROOQ CORPORATION
ENGINEERS, PLANNERS & PRODUCT DESIGN
1235 SW 87 AVE
MIAMI, FLORIDA 33174
TEL. (305) 264-8100 FAX. (305) 262-6978
COMP-ANL\W99-51UW

S-1000 ALUMINUM SINGLE HUNG WINDOW

UNIVERSAL ALUMINUM WINDOWS
1675 W. 31ST PLACE
HIALEAH, FL. 33012
TEL. (305) 825-7900 FAX (305) 825-5805

revisions:

no	date	by	description
A	10.09.03		ITEM NUMBERS ADDED

date: 07-02-99
scale: 1/2" = 1"
dr. by: HAMID
chk. by:

drawing no.
W99-51

sheet 4 of 4