MIAMI-DADE

BUILDING CODE COMPLIANCE OFFICE (BCCO)
PRODUCT CONTROL DIVISION

MIAMI-DADE COUNTY, FLORIDA
METRO-DADE FLAGLER BUILDING
140 WEST FLAGLER STREET, SUITE 1603
MIAMI, FLORIDA 33130-1563
(305) 375-2901 FAX (305) 375-2908

NOTICE OF ACCEPTANCE (NOA)

PGT Industries
1070 Technology Drive
Nokomis, FL 34275

SCOPE:
This NOA is being issued under the applicable rules and regulations governing the use of construction materials. The documentation submitted has been reviewed by Miami-Dade County Product Control Division and accepted by the Board of Rules and Appeals (BORA) to be used in Miami Dade County and other areas where allowed by the Authority Having Jurisdiction (AHJ).

This NOA shall not be valid after the expiration date stated below. The Miami-Dade County Product Control Division (In Miami Dade County) and/or the AHJ (in areas other than Miami Dade County) reserve the right to have this product or material tested for quality assurance purposes. If this product or material fails to perform in the accepted manner, the manufacturer will incur the expense of such testing and the AHJ may immediately revoke, modify, or suspend the use of such product or material within their jurisdiction. BORA reserves the right to revoke this acceptance, if it is determined by Miami-Dade County Product Control Division that this product or material fails to meet the requirements of the applicable building code.

This product is approved as described herein, and has been designed to comply with the Florida Building Code, including the High Velocity Hurricane Zone.

DESCRIPTION: Series "PW-701" Aluminum Picture Window-Non-Impact

APPROVAL DOCUMENT: Drawing No. **4259-3,** titled "Aluminum Picture Window, Non-Impact", sheets 1 through 10 of 10, prepared by manufacturer, dated 7/14/03, with revision "A", dated 12/15/03, signed and sealed by Robert L. Clark, P.E., bearing the Miami-Dade County Product Control Approval stamp with the Notice of Acceptance number and approval date by the Miami-Dade County Product Control Division.

MISSILE IMPACT RATING: None

LABELING: Each unit shall bear a permanent label with the manufacturer's name or logo, city, state and following statement: "Miami-Dade County Product Control Approved", unless otherwise noted herein.

RENEWAL of this NOA shall be considered after a renewal application has been filed and there has been no change in the applicable building code negatively affecting the performance of this product.

TERMINATION of this NOA will occur after the expiration date or if there has been a revision or change in the materials, use, and/or manufacture of the product or process. Misuse of this NOA as an endorsement of any product, for sales, advertising or any other purposes shall automatically terminate this NOA. Failure to comply with any section of this NOA shall be cause for termination and removal of NOA.

ADVERTISEMENT: The NOA number preceded by the words Miami-Dade County, Florida, and followed by the expiration date may be displayed in advertising literature. If any portion of the NOA is displayed, then it shall be done in its entirety.

INSPECTION: A copy of this entire NOA shall be provided to the user by the manufacturer or its distributors and shall be available for inspection at the job site at the request of the Building Official.
This NOA consists of this page 1 and evidence pages E-1, as well as approval document mentioned above.
The submitted documentation was reviewed by **Theodore Berman, P.E.**

1/29/2004

PRODUCT CONTROL ACCEPTED

PGT Industries

NOTICE OF ACCEPTANCE: EVIDENCE SUBMITTED

A. DRAWINGS

1. Manufacturer's die drawings and sections.
Drawing No. **4259-3,** titled "Aluminum Picture Window, Non-Impact", sheets 1 through 10 of 10, prepared by manufacturer, dated 7/14/03, with revision "A", dated 12/15/03, signed and sealed by Robert L. Clark, P.E.

B. TESTS

1. Test reports on 1) Air Infiltration Test, per FBC, TAS 202-94
2) Uniform Static Air Pressure Test, Loading per FBC, TAS 202-94
3) Water Resistance Test, per FBC, TAS 202-94
alone with marked-up drawings and installation diagram of an aluminum picture window, prepared by Fenestration Testing Laboratory, Inc., Test Report No. **FTL-3847**, dated 07/31/03, signed and sealed by Joseph Chan, P.E.

C. CALCULATIONS

1. Anchor Calculations, ASTM-E1300-98, and structural analysis, prepared by manufacturer, dated 10/31/03, signed and sealed by Robert L. Clark, P.E.

2. Revised Anchor Calculations and structural analysis, prepared by manufacturer, dated 12/16/03, signed and sealed by Robert L. Clark, P.E.

D. QUALITY ASSURANCE

1. Miami Dade Building Code Compliance Office (BCCO).

E. MATERIAL CERTIFICATIONS

1. None

F. STATEMENTS

1. Laboratory compliance letter for Test Report no. **FTL-3847,** issued by Fenestration Testing Laboratory, Inc., dated 08/25/03, signed and sealed by Joseph Chan, P.E.

Theodore Berman, P.E.
Deputy Director, Product Control Division
NOA No 03-1105.02
Expiration Date: February 19, 2009
Approval Date: February 19, 2004

NOTES: NON-IMPACT WINDOWS

1. GLAZING OPTIONS:
   A. 3/16" TEMPERED GLASS
   B. 1/4" TEMPERED GLASS
   C. 13/16" I.G. GLASS COMPRISED OF (2) LITES OF 3/16" TEMPERED GLASS WITH A 7/16" AIR SPACE.

2. DESIGN PRESSURE RATINGS: (FLANGED - SEE SHEET 5, TABLE 1 AND INTEGRAL FIN - SEE SHEET 6, TABLE 2)
   A. NEGATIVE DESIGN LOADS BASED ON TESTED PRESSURE AND GLASS TABLES ASTM E 1300-98 (AND ASTM E 1300-94 OUTSIDE MIAMI-DADE COUNTY).
   B. POSITIVE DESIGN LOADS BASED ON WATER TEST PRESSURE AND GLASS TABLES ASTM E 1300-98 (AND ASTM E 1300-94 OUTSIDE MIAMI-DADE COUNTY).
   C. DESIGN PRESSURES UNDER 40 P.S.F. NOT APPLICABLE IN MIAMI-DADE COUNTY.

3. FLANGED UNIT ANCHORAGE: SINGLE ROW OF FASTENERS LOCATED AS FOLLOWS: (SEE SHEET 10, DETAILS C, D & E)
   HEAD & SILL: MAX. 8 1/2" FROM CORNERS
   MAX. 11" O.C.
   JAMBS: A MAX. 8 1/2" FROM CORNERS
   MAX. 11" O.C.
   (DESIGN PRESSURE LIMITED TO 48 P.S.F WHEN ANCHORING WITH #12 SCREWS)

4. INTEGRAL FIN UNIT ANCHORAGE WITH NAILS: SINGLE ROW OF .130 DIA. x 2 1/2" LG. NAILS AS FOLLOWS: (SEE SHEET 10, DETAIL A)
   HEAD & SILL: AT EACH CORNER
   MAX. 5" O.C.
   JAMBS: AT EACH CORNER
   MAX. 5" O.C.

5. INTEGRAL FIN UNIT ANCHORAGE WITH #12 SCREWS: SINGLE ROW OF SCREWS AS FOLLOWS: (SEE SHEET 10, DETAIL B)
   HEAD & SILL: MAX. 8 1/2" FROM CORNERS
   MAX. 11" O.C.
   JAMBS: A MAX. 8 1/2" FROM CORNERS
   MAX. 11" O.C.
   (DESIGN PRESSURE LIMITED TO 48 P.S.F. WHEN ANCHORING WITH #12 SCREWS)

6. MIAMI-DADE COUNTY APPROVED SHUTTERS ARE REQUIRED IN MIAMI-DADE AND WHERE IMPACT RESISTANCE IS REQUIRED,

7. NARROW JOINT SEALANT IS USED ON ALL FOUR CORNERS OF THE FRAME.

8. REFERENCE TEST REPORTS: FTL-3834 & FTL-3847

NOA DRAWING TABLE OF CONTENTS

	SHEET
GENERAL NOTES	1
GLAZING DETAILS	2
ELEVATIONS, FLANGED	3
ELEVATIONS, INTEGRAL FIN	4
DESIGN PRESSURES FLANGED	5
DESIGN PRESSURES FINNED	6
SECTIONS, FLANGED	7
CORNER ASS'Y, FLANGED	7
SECTIONS, INTEGRAL FIN	8
CORNER ASS'Y, INTEGRAL FIN	8
EXTRUSION PROFILES	9
PARTS LIST	9
ANCHORAGE	1 & 10

Approved as complying with the Florida Building Code
Date 02/19/04
NOA# 03-1105.02
Miami Dade Product Control Division
By

12/16/03
Robert L. Clark, P.E.
PE #39712
Structural

Revsd By:	Date:	Revisions:	
Revsd By:	Date:	Revisions:	
Revsd By: F.K.	Date: 12/15/03	Revisions: A	REDUCE ANCHOR SPACING
Drawn By: F.K.	Date: 7/14/03	Checked By:	Date:

1070 TECHNOLOGY DRIVE
NOKOMIS, FL 34275

P.O. BOX 1529
NOKOMIS, FL 34274

PGT Visibly Better

Description: NOTES & TABLE OF CONTENTS

Title: ALUMINUM PICTURE WINDOW, NON-IMPACT

Series/Model:	Scale:	Sheet:	Drawing No.	Rev:
PW-701	NTS	1 of 10	4259-3	A

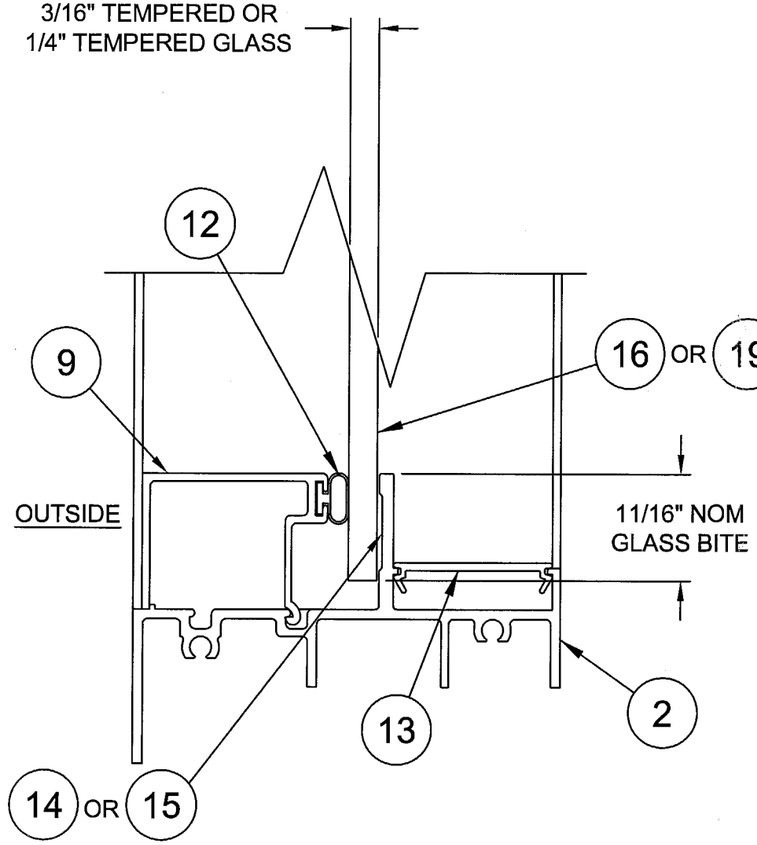

MONOLITHIC GLAZING DETAIL
FLANGED OR INTEGRAL FIN FRAME
(FLANGE FRAME SHOWN)

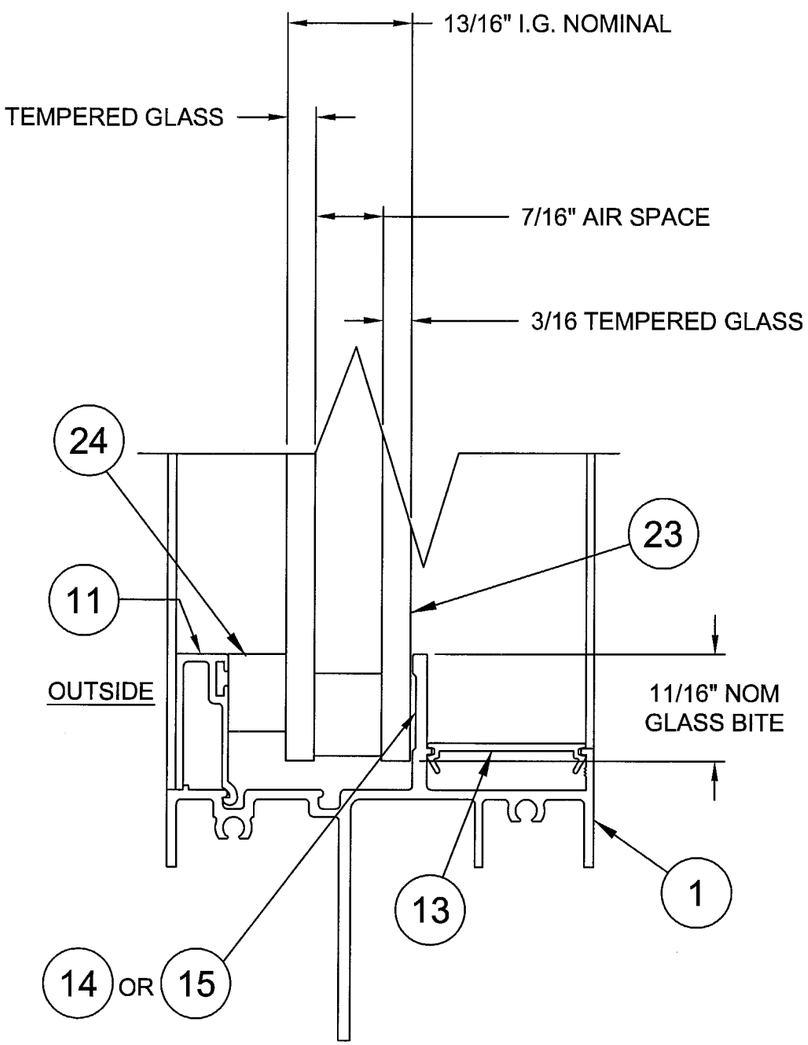

13/16" I.G. GLAZING DETAIL
FLANGED OR INTEGRAL FIN FRAME
(INTEGRAL FIN FRAME SHOWN)

Approved as complying with the Florida Building Code
Date 02/19/04
NOA# 03-1105.02
Miami Dade Product Control Division
By [signature]

12/16/03

Robert L. Clark, P.E.
PE #39712
Structural

Revsd By:	Date:	Revisions:	
Revsd By:	Date:	Revisions:	
Revsd By: F.K.	Date: 12/15/03	Revisions: A	NO CHANGE THIS SHEET
Drawn By: F.K.	Date: 7/14/03	Checked By:	Date:

1070 TECHNOLOGY DRIVE
NOKOMIS, FL 34275

P.O. BOX 1529
NOKOMIS, FL 34274

PGT
Visibly Better

Description: GLAZING DETAILS

Title: ALUMINUM PICTURE WINDOW, NON-IMPACT

Series/Model:	Scale:	Sheet:	Drawing No.	Rev:
PW-701	NTS	2 of 10	4259-3	A

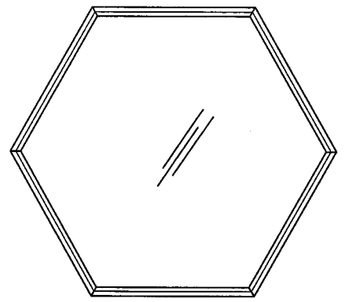

HEXAGON
MAX. SIZE = 60" BETWEEN FLATS
OR MAX. AREA = 21.65 SQ. FT.

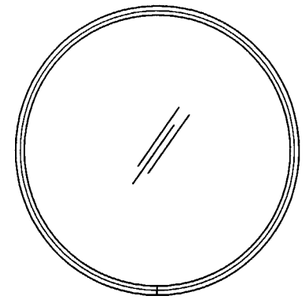

FULL CIRCLE
MAX. SIZE = 60" DIA.
OR MAX. AREA = 19.63 SQ. FT.

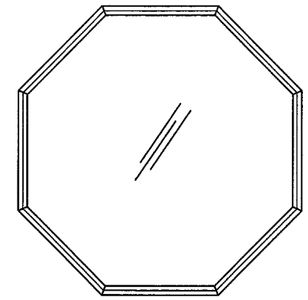

OCTAGON
MAX. SIZE = 60" BETWEEN FLATS
OR MAX. AREA = 20.71 SQ. FT.

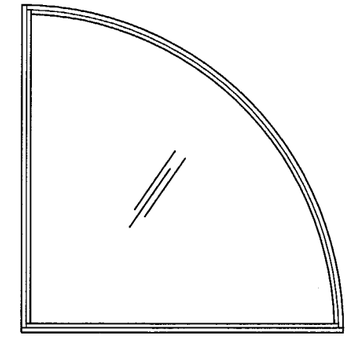

QUARTER CIRCLE
MAX. SIZE = 68" X 68"
OR MAX. AREA = 25.22 SQ. FT.

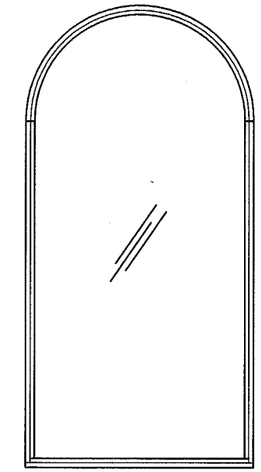

ARCH.
MAX. SIZE = 60" X 120"
OR MAX. AREA = 47.32 SQ. FT.

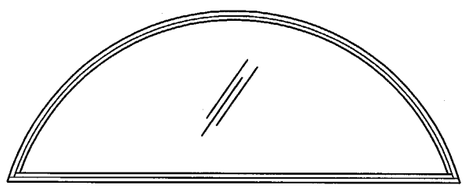

FAN
MAX. SIZE = 120" X 59"
OR MAX. AREA = 38.44 SQ. FT.

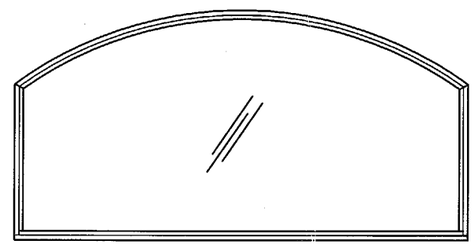

EYEBROW
MAX. SIZE = 120" X 60"
OR MAX. AREA = 49.99 SQ. FT.

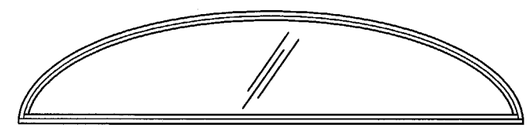

ELLIPTICAL
MAX. SIZE = 120" X 59"
OR MAX. AREA = 49.15 SQ. FT.

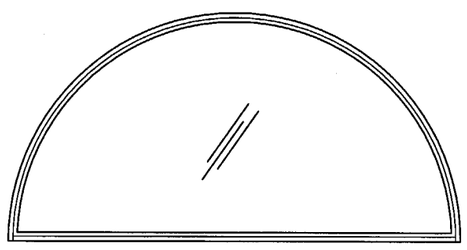

HALF CIRCLE
MAX. SIZE = 120" X 60"
OR MAX. AREA = 39.27 SQ. FT.

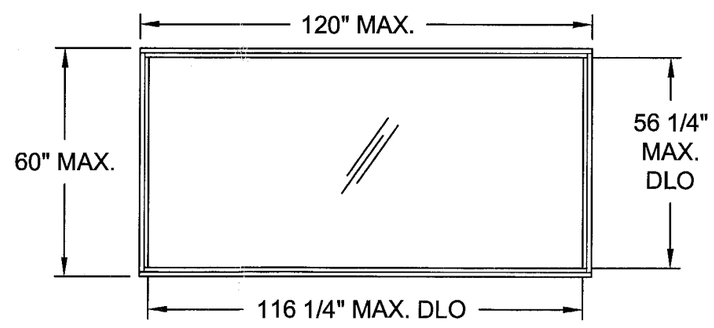

RECTANGLE
MAX. SIZE = 60" X 120"
OR MAX. AREA = 50.00 SQ. FT.

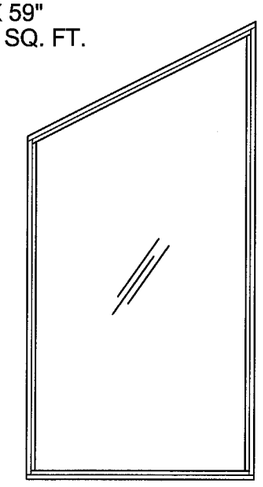

TRAPEZOID
MAX. SIZE = 60" X 120"
OR MAX. AREA = 49.99 SQ. FT.

NOTE:
FOR ANCHORAGE INFORMATION SEE NOTE 3, SHEET 1 AND SHEET 10, DETAILS C, D & E.

Approved as complying with the Florida Building Code
Date 02/19/04
NOA# 03-1105.02
Miami Dade Product Control Division
By [signature]

Revsd By:	Date:	Revisions:	
Revsd By:	Date:	Revisions:	
Revsd By: F.K.	Date: 12/15/03	Revisions: A	NO CHANGE THIS SHEET
Drawn By: F.K.	Date: 7/14/03	Checked By:	Date:

1070 TECHNOLOGY DRIVE
NOKOMIS, FL 34275

P.O. BOX 1529
NOKOMIS, FL 34274

PGT
Visibly Better

Description: FLANGED ELEVATIONS

Title: ALUMINUM PICTURE WINDOW, NON-IMPACT

Series/Model:	Scale:	Sheet:	Drawing No.	Rev:
PW-701	NTS	3 of 10	4259-3	A

[signature]
12/14/03

Robert L. Clark, P.E.
PE #39712
Structural

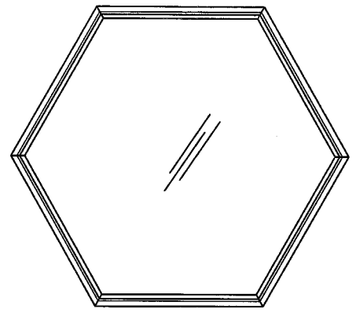

HEXAGON

MAX. SIZE = 60" BETWEEN FLATS
OR MAX. AREA = 21.65 SQ. FT.

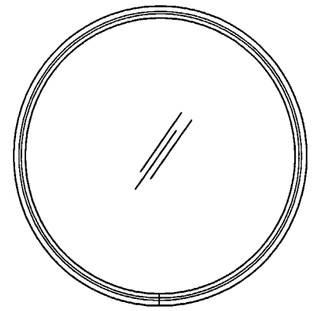

FULL CIRCLE

MAX. SIZE = 60" DIA.
OR MAX. AREA = 19.63 SQ. FT.

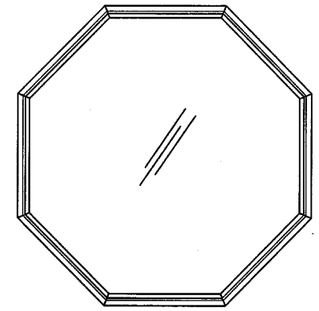

OCTAGON

MAX. SIZE = 60" BETWEEN FLATS
OR MAX. AREA = 20.71 SQ. FT.

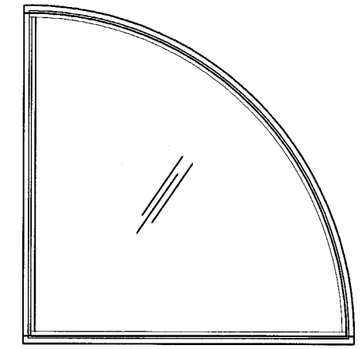

QUARTER CIRCLE

MAX. SIZE = 68" X 68"
OR MAX. AREA = 25.22 SQ. FT.

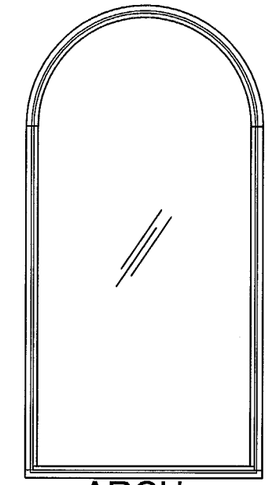

ARCH.

MAX. SIZE = 60" X 120"
OR MAX. AREA = 47.32 SQ. FT.

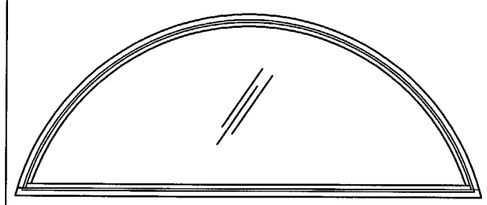

FAN

MAX. SIZE = 120" X 59"
OR MAX. AREA = 38.44 SQ. FT.

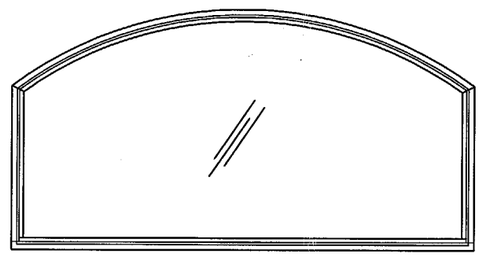

EYEBROW

MAX. SIZE = 120" X 60"
OR MAX. AREA = 49.99 SQ. FT.

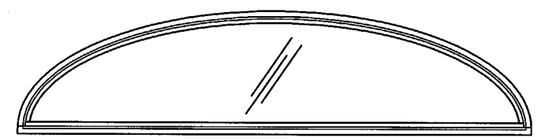

ELLIPTICAL

MAX. SIZE = 120" X 59"
OR MAX. AREA = 49.15 SQ. FT.

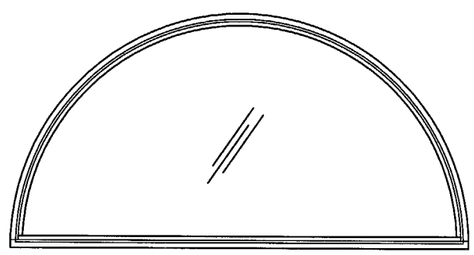

HALF CIRCLE

MAX. SIZE = 120" X 60"
OR MAX. AREA = 39.27 SQ. FT.

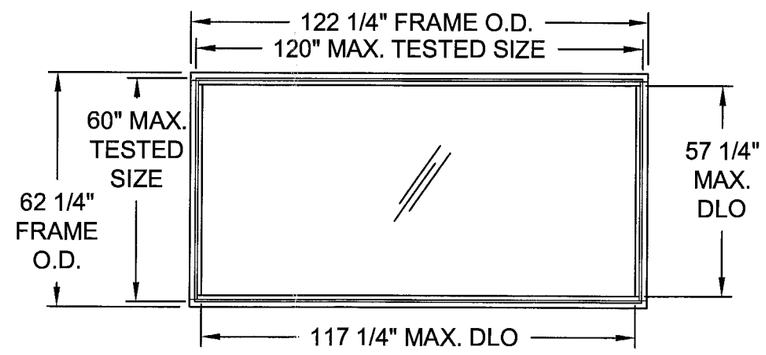

RECTANGLE

MAX. SIZE = 60" X 120"
OR MAX. AREA = 50.00 SQ. FT.

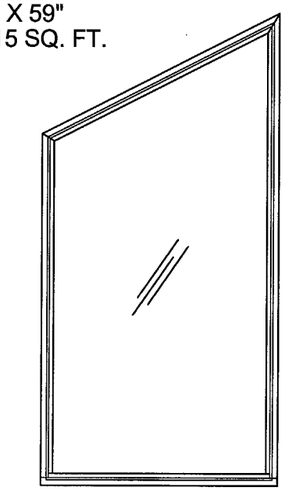

TRAPEZOID

MAX. SIZE = 60" X 120"
MAX. AREA = 49.99 SQ. FT.

NOTE:

FOR ANCHORAGE INFORMATION SEE NOTES 4 & 5, SHEET 1 AND SHEET 10, DETAILS A & B.

Approved as complying with the Florida Building Code
Date 02/19/04
NOA# 03-1105.07
Miami Dade Product Control Division
By

Revsd By:	Date:	Revisions:	
Revsd By:	Date:	Revisions:	
Revsd By: F.K.	Date: 12/15/03	Revisions: A	NO CHANGE THIS SHEET
Drawn By: F.K.	Date: 7/14/03	Checked By:	Date:

1070 TECHNOLOGY DRIVE
NOKOMIS, FL 34275

P.O. BOX 1529
NOKOMIS, FL 34274

PGT Visibly Better

Description: INTEGRAL FIN ELEVATIONS

Title: ALUMINUM PICTURE WINDOW, NON-IMPACT

Series/Model:	Scale:	Sheet:	Drawing No.	Rev:
PW-701	NTS	4 of 10	4259-3	A

12/15/03

Robert L. Clark, P.E.
PE #39712
Structural

COMPARATIVE ANALYSIS TABLE 1. GLASS TYPES: A. 3/16" TEMPERED GLASS FTL-3834; B. 1/4" TEMPERED GLASS FTL-3834; C. 13/16" I.G. GLASS (3/16"T, 7/16" SPACE, 3/16"T) FTL-3847

WINDOW WIDTH		WINDOW HEIGHT																			
		15.000		20.000		25.000		30.000		35.000		40.000		45.000		50.000		55.000		60.000	
30.000	A	133.3	-210.0	133.3	-210.0	133.3	-210.0	133.3	-210.0	133.3	-210.0	133.3	-210.0	133.3	-210.0	133.3	-209.6	133.3	-186.9	133.3	-169.4
	B	133.3	-210.0	133.3	-210.0	133.3	-210.0	133.3	-210.0	133.3	-210.0	133.3	-210.0	133.3	-210.0	133.3	-210.0	133.3	-210.0	133.3	-210.0
	C	133.3	-210.0	133.3	-210.0	133.3	-210.0	133.3	-210.0	133.3	-210.0	133.3	-210.0	133.3	-210.0	133.3	-210.0	133.3	-210.0	133.3	-80.0
AREA SQ.FT.		*3.125*		*4.167*		*5.208*		*6.250*		*7.292*		*8.333*		*9.375*		*10.417*		*11.458*		*12.500*	
40.000	A	133.3	-210.0	133.3	-210.0	133.3	-210.0	133.3	-210.0	133.3	-210.0	133.3	-180.0	133.3	-180.0	133.3	-177.0	133.3	-159.5	133.3	-147.5
	B	133.3	-210.0	133.3	-210.0	133.3	-210.0	133.3	-210.0	133.3	-210.0	133.3	-180.0	133.3	-180.0	133.3	-180.0	133.3	-180.0	133.3	-180.0
	C	133.3	-210.0	133.3	-210.0	133.3	-210.0	133.3	-210.0	133.3	-210.0	133.3	-180.0	133.3	-180.0	133.3	-180.0	133.3	-180.0	133.3	-180.0
AREA SQ.FT.		*4.167*		*5.556*		*6.944*		*8.333*		*9.722*		*11.111*		*12.500*		*13.889*		*15.278*		*16.667*	
50.000	A	133.3	-210.0	133.3	-210.0	133.3	-210.0	133.3	-209.6	133.3	-189.5	133.3	-177.0	133.3	-142.2	115.2	-115.2	115.2	-115.2	115.2	-115.2
	B	133.3	-210.0	133.3	-210.0	133.3	-210.0	133.3	-210.0	133.3	-210.0	133.3	-180.0	133.3	-142.2	115.2	-115.2	115.2	-115.2	115.2	-115.2
	C	133.3	-210.0	133.3	-210.0	133.3	-210.0	133.3	-210.0	133.3	-210.0	133.3	-180.0	133.3	-142.2	115.2	-115.2	115.2	-115.2	115.2	-115.2
AREA SQ.FT.		*5.208*		*6.944*		*8.681*		*10.417*		*12.153*		*13.889*		*15.625*		*17.361*		*19.097*		*20.833*	
60.000	A	133.3	-210.0	133.3	-210.0	133.3	-210.0	133.3	-169.4	133.3	-153.7	133.3	-147.5	133.3	-139.7	115.2	-115.2	80.0	-95.2	80.0	-80.0
	B	133.3	-210.0	133.3	-210.0	133.3	-210.0	133.3	-210.0	133.3	-198.6	133.3	-180.0	133.3	-142.2	115.2	-115.2	95.2	-95.2	80.0	-80.0
	C	133.3	-210.0	133.3	-210.0	133.3	-210.0	133.3	-210.0	133.3	-210.0	133.3	-180.0	133.3	-142.2	115.2	-115.2	95.2	-95.2	80.0	-80.0
AREA SQ.FT.		*6.250*		*8.333*		*10.417*		*12.500*		*14.583*		*16.667*		*18.750*		*20.833*		*22.917*		*25.000*	
70.000	A	133.3	-210.0	133.3	-210.0	133.3	-197.5	133.3	-146.2	128.5	-128.5	123.1	-123.1	117.8	-117.8	111.1	-111.1	80.0	-95.2	80.0	-80.0
	B	133.3	-210.0	133.3	-210.0	133.3	-210.0	133.3	-205.7	133.3	-168.6	133.3	-151.7	133.3	-142.2	115.2	-115.2	95.2	-95.2	80.0	-80.0
	C	133.3	-210.0	133.3	-210.0	133.3	-210.0	133.3	-210.0	133.3	-210.0	133.3	-180.0	133.3	-142.2	115.2	-115.2	95.2	-95.2	80.0	-80.0
AREA SQ.FT.		*7.292*		*9.722*		*12.153*		*14.583*		*17.014*		*19.444*		*21.875*		*24.306*		*26.736*		*29.167*	
80.000	A	133.3	-210.0	133.3	-210.0	133.3	-186.5	133.3	-134.9	111.0	-111.0	104.1	-104.1	99.8	-99.8	97.8	-97.8	80.0	-95.2	80.0	-80.0
	B	133.3	-210.0	133.3	-210.0	133.3	-210.0	133.3	-190.7	133.3	-148.9	129.9	-129.9	123.4	-123.4	115.2	-115.2	95.2	-95.2	80.0	-80.0
	C	133.3	-210.0	133.3	-210.0	133.3	-210.0	133.3	-210.0	133.3	-197.5	133.3	-180.0	133.3	-142.2	115.2	-115.2	95.2	-95.2	80.0	-80.0
AREA SQ.FT.		*8.333*		*11.111*		*13.889*		*16.667*		*19.444*		*22.222*		*25.000*		*27.778*		*30.556*		*33.333*	
90.000	A	133.3	-210.0	133.3	-210.0	133.3	-182.5	127.6	-127.6	98.4	-98.4	87.7	-87.7	83.5	-83.5	84.8	-84.8	80.0	-83.2	80.0	-80.0
	B	133.3	-210.0	133.3	-210.0	133.3	-210.0	133.3	-180.2	133.3	-136.6	115.9	-115.9	106.9	-106.9	103.7	-103.7	95.2	-95.2	80.0	-80.0
	C	133.3	-210.0	133.3	-210.0	133.3	-210.0	133.3	-192.0	133.3	-170.2	133.3	-154.3	133.3	-142.2	115.2	-115.2	95.2	-95.2	80.0	-80.0
AREA SQ.FT.		*9.375*		*12.500*		*15.625*		*18.750*		*21.875*		*25.000*		*28.125*		*31.250*		*34.375*		*37.500*	
100.000	A	133.3	-210.0	133.3	-210.0	133.3	-172.7	118.0	-118.0	86.8	-86.8	76.7	-76.7	74.4	-74.4	75.2	-75.2	71.5	-73.9	71.5	-71.5
	B	133.3	-210.0	133.3	-210.0	133.3	-197.5	133.3	-169.4	128.0	-128.0	104.7	-104.7	95.5	-95.5	91.0	-91.0	87.9	-87.9	80.0	-80.0
	C	133.3	-210.0	133.3	-210.0	133.3	-197.5	133.3	-169.4	133.3	-149.6	133.3	-135.0	123.9	-123.9	115.2	-115.2	95.2	-95.2	80.0	-80.0
AREA SQ.FT.		*10.417*		*13.889*		*17.361*		*20.833*		*24.306*		*27.778*		*31.250*		*34.722*		*38.194*		*41.667*	
110.000	A	133.3	-210.0	133.3	-210.0	133.3	-169.3	114.8	-114.8	84.5	-84.5	70.2	-70.2	64.4	-64.4	64.4	-64.4	63.3	-65.2	63.3	-63.3
	B	133.3	-210.0	133.3	-210.0	133.3	-177.2	133.3	-151.6	125.4	-125.4	99.3	-99.3	84.1	-84.1	79.4	-79.4	76.5	-76.5	75.8	-75.8
	C	133.3	-210.0	133.3	-210.0	133.3	-177.2	133.3	-151.6	133.3	-133.4	120.0	-120.0	109.7	-109.7	101.6	-101.6	95.2	-95.2	80.0	-80.0
AREA SQ.FT.		*11.458*		*15.278*		*19.097*		*22.917*		*26.736*		*30.556*		*34.375*		*38.194*		*42.014*		*45.833*	
120.000	A	133.3	-210.0	133.3	-196.4	133.3	-158.7	109.1	-109.1	80.0	-80.0	64.9	-64.9	58.9	-58.9	55.4	-55.4	57.7	-57.0	57.7	-57.7
	B	133.3	-210.0	133.3	-196.4	133.3	-160.7	133.3	-137.1	119.9	-119.9	92.4	-92.4	76.3	-76.3	69.8	-69.8	68.3	-68.3	69.2	-69.2
	C	133.3	-210.0	133.3	-196.4	133.3	-160.7	133.3	-137.1	120.4	-120.4	108.0	-108.0	98.5	-98.5	90.9	-90.9	84.9	-84.9	80.0	-80.0
AREA SQ.FT.		*12.500*		*16.667*		*20.833*		*25.000*		*29.167*		*33.333*		*37.500*		*41.667*		*45.833*		*50.000*	

NOTES:

1. TABLE 1 PRESSURES ARE BASED ON THE LARGEST TESTED SIZE RECTANGULAR WINDOW ANCHORED WITH 1/4" TAPCONS. DESIGN PRESSURE ARE LIMITED TO +/-48 P.S.F WHEN ANCHORING WITH #12 SCREWS. A
2. ALL MAXIMUM SIZES SHOWN ON SHEET 3 ARE QUALIFIED TO THE PRESSURE OF A 50 SQ. FT. UNIT IN TABLE 1.
3. ALL SHAPES LESS THAN THE MAXIMUM SIZE, QUALIFY TO PRESSURE FOR THE MAXIMUM SIZE LISTED IN TABLE 1, OR TO THE PRESSURE FOR THE SMALLEST RECTANGULAR SIZE IN TABLE 1, WHICH THEIR OVERALL WIDTH AND HEIGHT DIMENSIONS COMPLETELY FIT WITHIN.

Revsd By:	Date:	Revisions:	
Revsd By:	Date:	Revisions:	
Revsd By: F.K.	Date: 12/15/03	Revisions: A	CHANGE NOTE 1 ANCHORING WITH #12 SCREWS
Drawn By: F.K.	Date: 7/14/03	Checked By:	Date:

1070 TECHNOLOGY DRIVE
NOKOMIS, FL 34275

P.O. BOX 1529
NOKOMIS, FL 34274

PGT Visibly Better

Description: FLANGED UNIT DESIGN PRESSURES

Title: ALUMINUM PICTURE WINDOW, NON-IMPACT

Series/Model:	Scale:	Sheet:	Drawing No.	Rev:
PW-701	NTS	5 of 10	4259-3	A

Approved as complying with the Florida Building Code
Date 02/19/04
NOA# 03-1105.02
Miami Dade Product Control Division
By

12/16/03

Robert L. Clark, P.E.
PE #39712
Structural

COMPARATIVE ANALYSIS TABLE 2. GLASS TYPES: A. 3/16" TEMPERED GLASS FTL-3834; B. 1/4" TEMPERED GLASS FTL-3834; C. 13/16" I.G. GLASS (3/16"T, 7/16" SPACE, 3/16"T) FTL-3847

WINDOW WIDTH		WINDOW HEIGHT																			
		15.000		20.000		25.000		30.000		35.000		40.000		45.000		50.000		55.000		60.000	
30.000	A	133.3	-210.0	133.3	-210.0	133.3	-210.0	133.3	-210.0	133.3	-210.0	133.3	-210.0	133.3	-210.0	133.3	-199.6	133.3	-178.7	133.3	-160.4
	B	133.3	-210.0	133.3	-210.0	133.3	-210.0	133.3	-210.0	133.3	-210.0	133.3	-210.0	133.3	-210.0	133.3	-210.0	133.3	-210.0	133.3	-210.0
	C	133.3	-210.0	133.3	-210.0	133.3	-210.0	133.3	-210.0	133.3	-210.0	133.3	-210.0	133.3	-210.0	133.3	-210.0	133.3	-210.0	133.3	-80.0
AREA SQ.FT.		*3.125*		*4.167*		*5.208*		*6.250*		*7.292*		*8.333*		*9.375*		*10.417*		*11.458*		*12.500*	
40.000	A	133.3	-210.0	133.3	-210.0	133.3	-210.0	133.3	-210.0	133.3	-210.0	133.3	-180.0	133.3	-180.0	133.3	-170.9	133.3	-156.1	133.3	-143.7
	B	133.3	-210.0	133.3	-210.0	133.3	-210.0	133.3	-210.0	133.3	-210.0	133.3	-180.0	133.3	-180.0	133.3	-180.0	133.3	-180.0	133.3	-175.0
	C	133.3	-210.0	133.3	-210.0	133.3	-210.0	133.3	-210.0	133.3	-210.0	133.3	-180.0	133.3	-180.0	133.3	-180.0	133.3	-180.0	133.3	-180.0
AREA SQ.FT.		*4.167*		*5.556*		*6.944*		*8.333*		*9.722*		*11.111*		*12.500*		*13.889*		*15.278*		*16.667*	
50.000	A	133.3	-210.0	133.3	-210.0	133.3	-210.0	133.3	-199.6	133.3	-182.0	133.3	-170.9	133.3	-142.2	115.2	-115.2	115.2	-115.2	115.2	-115.2
	B	133.3	-210.0	133.3	-210.0	133.3	-210.0	133.3	-210.0	133.3	-210.0	133.3	-180.0	133.3	-142.2	115.2	-115.2	115.2	-115.2	115.2	-115.2
	C	133.3	-210.0	133.3	-210.0	133.3	-210.0	133.3	-210.0	133.3	-210.0	133.3	-180.0	133.3	-142.2	115.2	-115.2	115.2	-115.2	115.2	-115.2
AREA SQ.FT.		*5.208*		*6.944*		*8.681*		*10.417*		*12.153*		*13.889*		*15.625*		*17.361*		*19.097*		*20.833*	
60.000	A	133.3	-210.0	133.3	-210.0	133.3	-199.8	133.3	-160.4	133.3	-148.4	133.3	-143.7	133.3	-135.6	115.2	-115.2	80.0	-95.2	80.0	-80.0
	B	133.3	-210.0	133.3	-210.0	133.3	-210.0	133.3	-210.0	133.3	-191.8	133.3	-175.0	133.3	-142.2	115.2	-115.2	95.2	-95.2	80.0	-80.0
	C	133.3	-210.0	133.3	-210.0	133.3	-210.0	133.3	-210.0	133.3	-210.0	133.3	-180.0	133.3	-142.2	115.2	-115.2	95.2	-95.2	80.0	-80.0
AREA SQ.FT.		*6.250*		*8.333*		*10.417*		*12.500*		*14.583*		*16.667*		*18.750*		*20.833*		*22.917*		*25.000*	
70.000	A	133.3	-210.0	133.3	-210.0	133.3	-182.3	133.3	-139.0	124.1	-124.1	119.8	-119.8	114.7	-114.7	109.5	-109.5	80.0	-95.2	80.0	-80.0
	B	133.3	-210.0	133.3	-210.0	133.3	-210.0	133.3	-194.4	133.3	-161.3	133.3	-146.8	133.3	-139.5	115.2	-115.2	95.2	-95.2	80.0	-80.0
	C	133.3	-210.0	133.3	-210.0	133.3	-210.0	133.3	-210.0	133.3	-210.0	133.3	-180.0	133.3	-142.2	115.2	-115.2	95.2	-95.2	80.0	-80.0
AREA SQ.FT.		*7.292*		*9.722*		*12.153*		*14.583*		*17.014*		*19.444*		*21.875*		*24.306*		*26.736*		*29.167*	
80.000	A	133.3	-210.0	133.3	-210.0	133.3	-171.0	127.4	-127.4	107.7	-107.7	101.5	-101.5	97.8	-97.8	95.9	-95.9	80.0	-92.9	80.0	-80.0
	B	133.3	-210.0	133.3	-210.0	133.3	-210.0	133.3	-178.5	133.3	-142.0	125.4	-125.4	120.9	-120.9	115.2	-115.2	95.2	-95.2	80.0	-80.0
	C	133.3	-210.0	133.3	-210.0	133.3	-210.0	133.3	-210.0	133.3	-193.9	133.3	-180.0	133.3	-142.2	115.2	-115.2	95.2	-95.2	80.0	-80.0
AREA SQ.FT.		*8.333*		*11.111*		*13.889*		*16.667*		*19.444*		*22.222*		*25.000*		*27.778*		*30.556*		*33.333*	
90.000	A	133.3	-210.0	133.3	-210.0	133.3	-166.6	118.8	-118.8	93.6	-93.6	85.8	-85.8	81.9	-81.9	83.7	-83.7	79.5	-81.9	79.5	-79.5
	B	133.3	-210.0	133.3	-210.0	133.3	-210.0	133.3	-168.0	129.6	-129.6	112.3	-112.3	104.8	-104.8	101.4	-101.4	95.2	-95.2	80.0	-80.0
	C	133.3	-210.0	133.3	-210.0	133.3	-210.0	133.3	-192.0	133.3	-168.5	133.3	-154.3	133.3	-142.2	115.2	-115.2	95.2	-95.2	80.0	-80.0
AREA SQ.FT.		*9.375*		*12.500*		*15.625*		*18.750*		*21.875*		*25.000*		*28.125*		*31.250*		*34.375*		*37.500*	
100.000	A	133.3	-210.0	133.3	-210.0	133.3	-157.7	110.5	-110.5	83.5	-83.5	74.1	-74.1	73.6	-73.6	74.2	-74.2	70.1	-72.5	70.1	-70.1
	B	133.3	-210.0	133.3	-210.0	133.3	-197.5	133.3	-160.6	122.9	-122.9	100.8	-100.8	93.1	-93.1	89.2	-89.2	86.4	-86.4	80.0	-80.0
	C	133.3	-210.0	133.3	-210.0	133.3	-197.5	133.3	-169.4	133.3	-149.6	133.3	-133.5	123.9	-123.9	115.2	-115.2	95.2	-95.2	80.0	-80.0
AREA SQ.FT.		*10.417*		*13.889*		*17.361*		*20.833*		*24.306*		*27.778*		*31.250*		*34.722*		*38.194*		*41.667*	
110.000	A	133.3	-210.0	133.3	-210.0	133.3	-153.9	107.4	-107.4	80.0	-80.0	68.1	-68.1	62.8	-62.8	63.4	-63.4	62.3	-64.3	62.3	-62.3
	B	133.3	-210.0	133.3	-210.0	133.3	-177.2	133.3	-151.6	119.4	-119.4	94.8	-94.8	81.2	-81.2	78.0	-78.0	74.7	-74.7	75.4	-75.4
	C	133.3	-210.0	133.3	-210.0	133.3	-177.2	133.3	-151.6	133.3	-133.4	120.0	-120.0	109.7	-109.7	101.6	-101.6	95.2	-95.2	80.0	-80.0
AREA SQ.FT.		*11.458*		*15.278*		*19.097*		*22.917*		*26.736*		*30.556*		*34.375*		*38.194*		*42.014*		*45.833*	
120.000	A	133.3	-210.0	133.3	-196.4	133.3	-149.2	102.7	-102.7	76.0	-76.0	62.5	-62.5	57.3	-57.3	55.3	-55.3	57.1	-56.4	57.1	-57.1
	B	133.3	-210.0	133.3	-196.4	133.3	-160.7	133.3	-137.1	112.5	-112.5	87.6	-87.6	73.9	-73.9	68.5	-68.5	67.9	-67.9	68.7	-68.7
	C	133.3	-210.0	133.3	-196.4	133.3	-160.7	133.3	-137.1	120.4	-120.4	108.0	-108.0	98.5	-98.5	90.9	-90.9	84.9	-84.9	80.0	-80.0
AREA SQ.FT.		*12.500*		*16.667*		*20.833*		*25.000*		*29.167*		*33.333*		*37.500*		*41.667*		*45.833*		*50.000*	

NOTES:

1. TABLE 2 PRESSURES ARE BASED ON THE LARGEST TESTED SIZE RECTANGULAR WINDOW ANCHORED WITH 1/4" TAPCONS. DESIGN PRESSURES ARE LIMITED TO +/-48 P.S.F. WHEN ANCHORING WITH #12 SCREWS. A
2. ALL MAXIMUM SIZES SHOWN ON SHEET 4 ARE QUALIFIED TO THE PRESSURE OF A 50 SQ. FT. UNIT IN TABLE 2.
3. ALL SHAPES LESS THAN THE MAXIMUM SIZE, QUALIFY TO PRESSURE FOR THE MAXIMUM SIZE LISTED IN TABLE 2, OR TO THE PRESSURE FOR THE SMALLEST RECTANGULAR SIZE IN TABLE 2, WHICH THEIR OVERALL WIDTH AND HEIGHT DIMENSIONS COMPLETELY FIT WITHIN.

Approved as complying with the Florida Building Code
Date 02/19/04
NOA# 03-1105.02
Miami Dade Product Control Division
By

Revsd By:	Date:	Revisions:	
Revsd By:	Date:	Revisions:	
Revsd By: F.K.	Date: 12/15/03	Revisions: A	CHANGE NOTE 1 ANCHORING WITH #12 SCREWS
Drawn By: F.K.	Date: 7/14/03	Checked By:	Date:

1070 TECHNOLOGY DRIVE
NOKOMIS, FL 34275

P.O. BOX 1529
NOKOMIS, FL 34274

PGT Visibly Better

Description: INTEGRAL FIN UNIT DESIGN PRESSURES

Title: ALUMINUM PICTURE WINDOW, NON-IMPACT

Series/Model:	Scale:	Sheet:	Drawing No.	Rev:
PW-701	NTS	6 of 10	4259-3	A

12/16/03

Robert L. Clark, P.E.
PE #39712
Structural

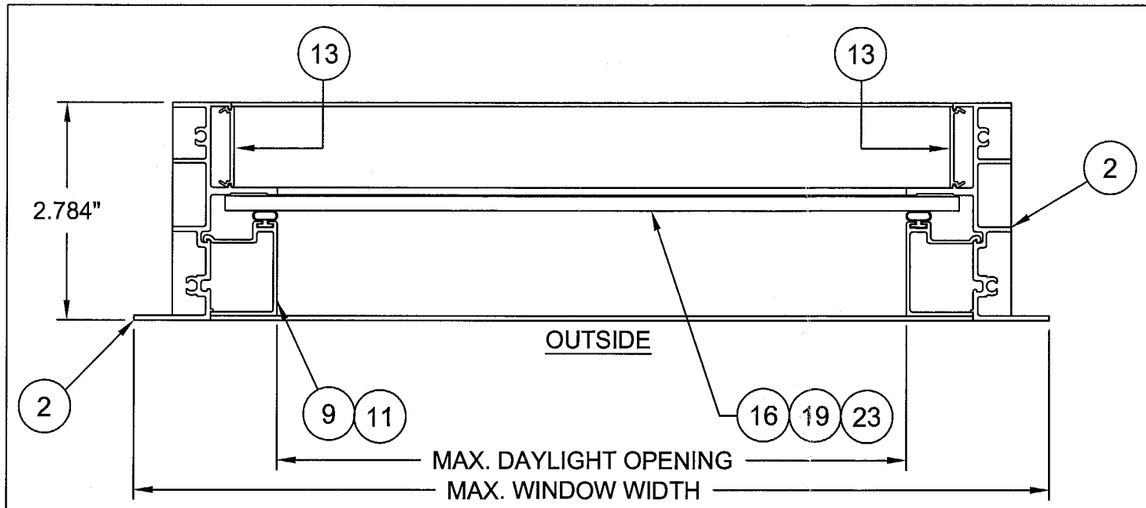

HORIZONTAL SECTION (FLANGE FRAME)

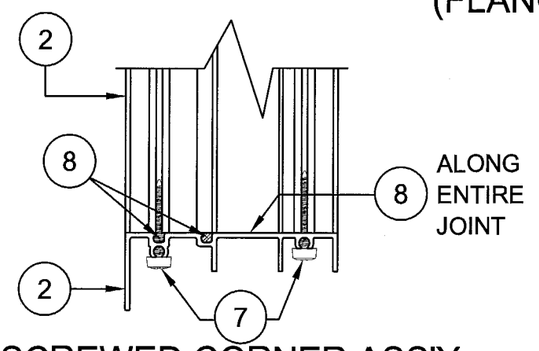

SCREWED CORNER ASS'Y (FLANGE FRAME)

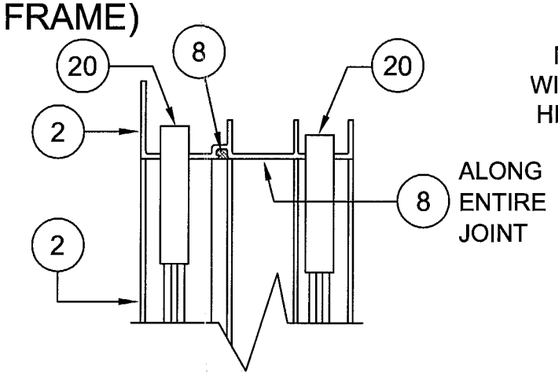

KEYED CORNER ASS'Y (FLANGE FRAME)

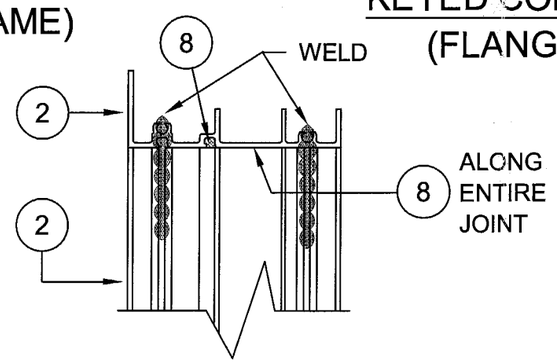

WELDED CORNER ASS'Y (FLANGE FRAME)

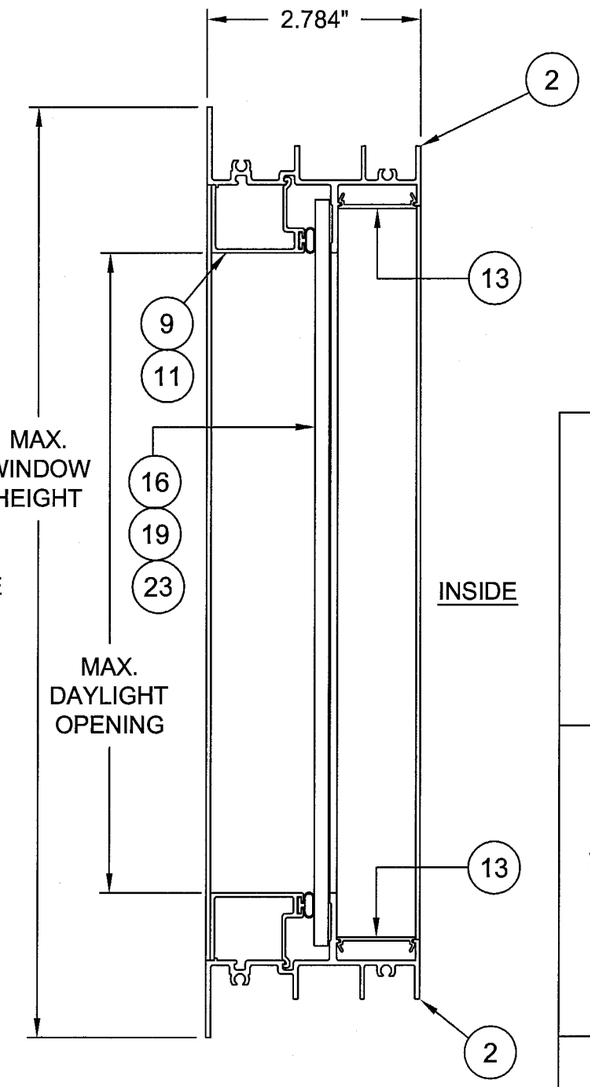

VERTICAL SECTION (FLANGE FRAME)

Approved as complying with the Florida Building Code
Date 02/19/04
NOA# 03-1105.02
Miami Dade Product Control Division
By

12/16/03

Robert L. Clark, P.E.
PE #39712
Structural

Revsd By:	Date:	Revisions:	
Revsd By:	Date:	Revisions:	
Revsd By: F.K.	Date: 12/15/03	Revisions: A	NO CHANGE THIS SHEET
Drawn By: F.K.	Date: 7/14/03	Checked By:	Date:

1070 TECHNOLOGY DRIVE
NOKOMIS, FL 34275

P.O. BOX 1529
NOKOMIS, FL 34274

PGT Visibly Better

Description: SECTIONS & CORNER ASS'Y, FLANGED

Title: ALUMINUM PICTURE WINDOW, NON-IMPACT

Series/Model:	Scale:	Sheet:	Drawing No.	Rev:
PW-701	NTS	7 of 10	4259-3	A

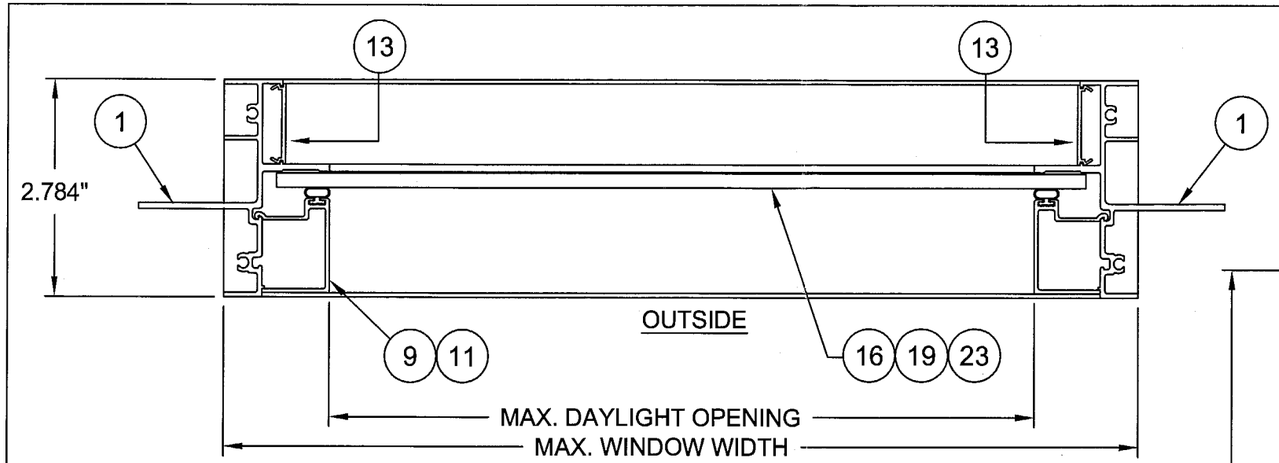

HORIZONTAL SECTION
(INTEGRAL FIN FRAME)

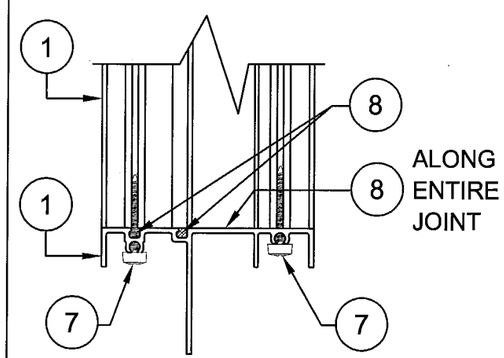

SCREWED CORNER ASS'Y
(INTEGRAL FIN FRAME)

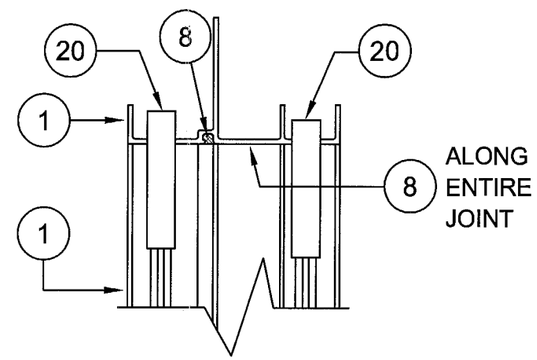

KEYED CORNER ASS'Y
(INTEGRAL FIN FRAME)

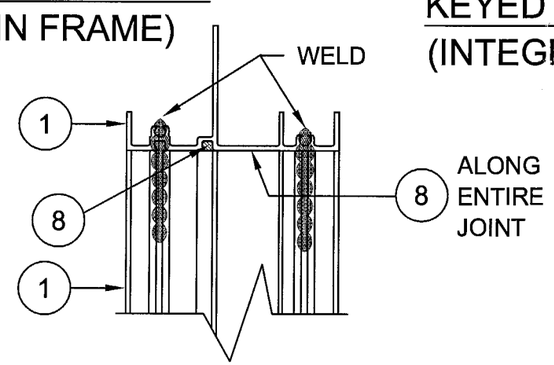

WELDED CORNER ASS'Y (INTEGRAL FIN FRAME)

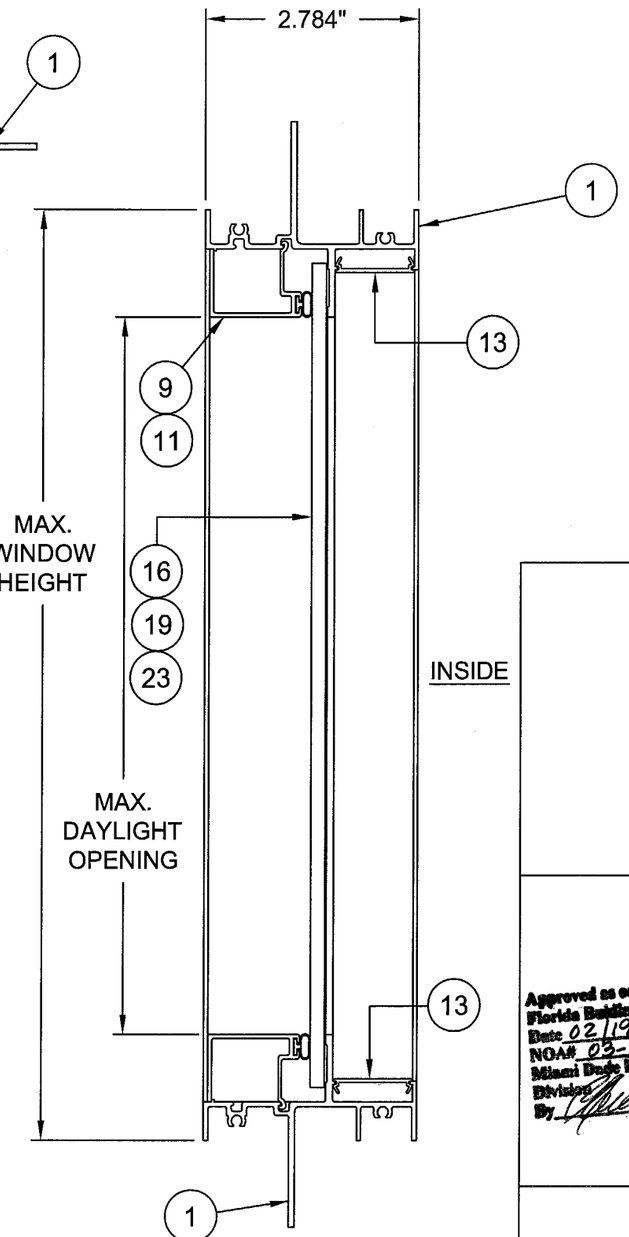

VERTICAL SECTION
(INTEGRAL FIN FRAME)

Approved as complying with the Florida Building Code
Date 02/19/04
NOA# 03-1105.02
Miami Dade Product Control Division
By

12/14/03

Robert L. Clark, P.E.
PE #39712
Structural

Revsd By:	Date:	Revisions:	
Revsd By:	Date:	Revisions:	
Revsd By: F.K.	Date: 12/15/03	Revisions: A	NO CHANGE THIS SHEET
Drawn By: F.K.	Date: 7/14/03	Checked By:	Date:

1070 TECHNOLOGY DRIVE
NOKOMIS, FL 34275

P.O. BOX 1529
NOKOMIS, FL 34274

PGT
Visibly Better

Description: SECTIONS, INTEGRAL FIN

Title: ALUMINUM PICTURE WINDOW, NON-IMPACT

Series/Model:	Scale:	Sheet:	Drawing No.	Rev:
PW-701	NTS	8 of 10	4259-3	A

ITEM	DWG NO.	PART #	DESCRIPTION
1	4256A	64256	INTEGRAL FIN FRAME HEAD, SILL & JAMB
2	4253	64253	FLANGED FRAME HEAD, SILL & JAMB
7	1155	781PQX	#8 X 1 QUAD PN SMS STAINLESS STEEL
8			SCHNEE-MOREHEAD SM5504 ACRYL-R NARROW JOINT SEALANT OR EQUAL
9	4258	64258	3/16 & 1/4 MONOLITHIC BEAD
11	4254	64254	13/16 I.G. GLAZING BEAD
12	1224	6TP247	VINYL BULB WEATHERSTRIP (THICK)
13	4224		INSTALLATION FASTENER COVER
14			DOW CORNING 899 GLAZING SEALANT
15			DOW CORNING 995 SILICONE STRUCTURAL SEALANT, BLACK
16			3/16" TEMPERED GLASS
19			1/4" TEMPERED GLASS
20	4262	64262	ARCHITECTURAL CORNER KEY
23			13/16" I.G. GLASS: 3/16" TEMPERED - 7/16" AIR SPACE - 3/16" TEMPERED GLASS
24			1/2" THK. X 1/2" WIDE FOAM TAPE

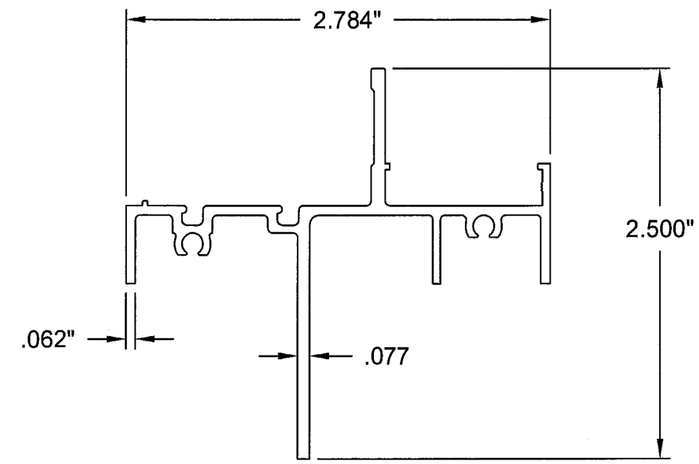

ITEM 1, INTEGRAL FIN FRAME

MAT'L: 6063-T5
DWG NO. 4256A

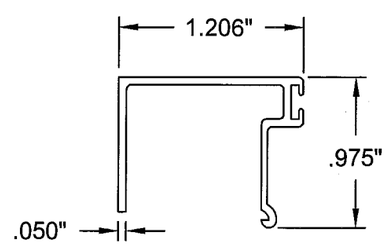

ITEM 9,
3/16",1/4" MONOLITHIC BEAD

MAT'L: 6063-T5
DWG NO. 4258

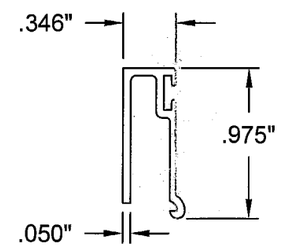

ITEM 11,
13/16" I.G. GLASS BEAD

MAT'L: 6063-T5
DWG NO. 4254

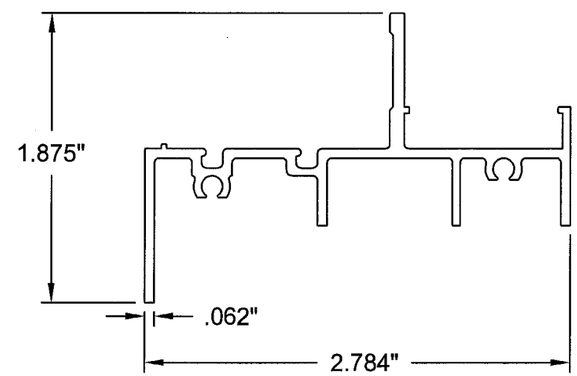

ITEM 2, FLANGED FRAME

MAT'L: 6063-T5
DWG NO. 4253

Approved as complying with the Florida Building Code
Date 02/19/04
NOA# 03-1105.02
Miami Dade Product Control Division
By

Revsd By:	Date:	Revisions:			
Revsd By:	Date:	Revisions:			
Revsd By: F.K.	Date: 12/15/03	Revisions: A	NO CHANGE THIS SHEET		
Drawn By: F.K.	Date: 7/14/03	Checked By:	Date:		

1070 TECHNOLOGY DRIVE
NOKOMIS, FL 34275

P.O. BOX 1529
NOKOMIS, FL 34274

PGT Visibly Better

Description: EXTRUSION PROFILES & PARTS LIST

Title: ALUMINUM PICTURE WINDOW, NON-IMPACT

Series/Model:	Scale:	Sheet:	Drawing No.	Rev:
PW-701	NTS	9 of 10	4259-3	A

12/16/03

Robert L. Clark, P.E.
PE #39712
Structural

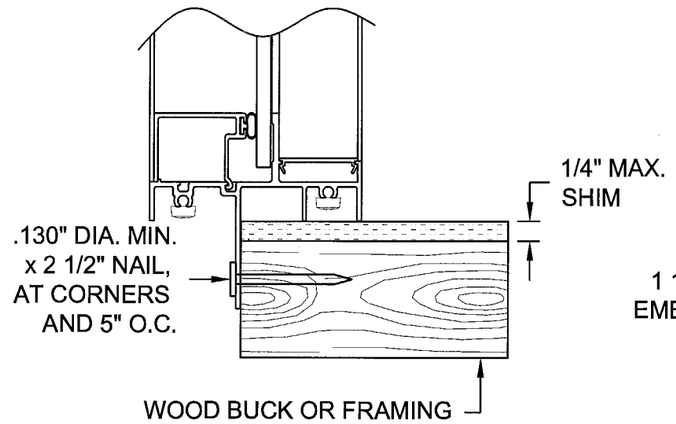

INTEGRAL FIN DETAIL A

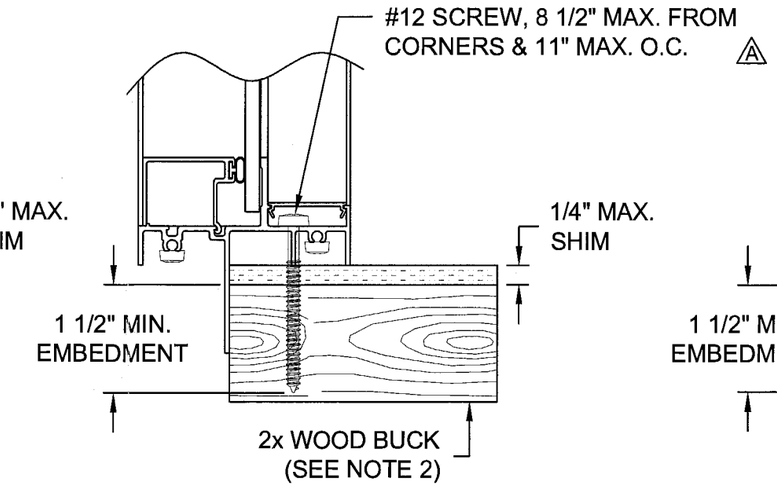

INTEGRAL FIN DETAIL B

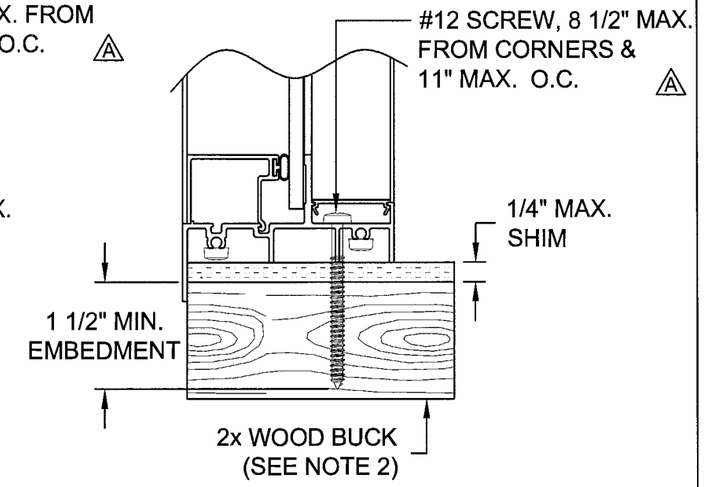

FLANGED DETAIL C

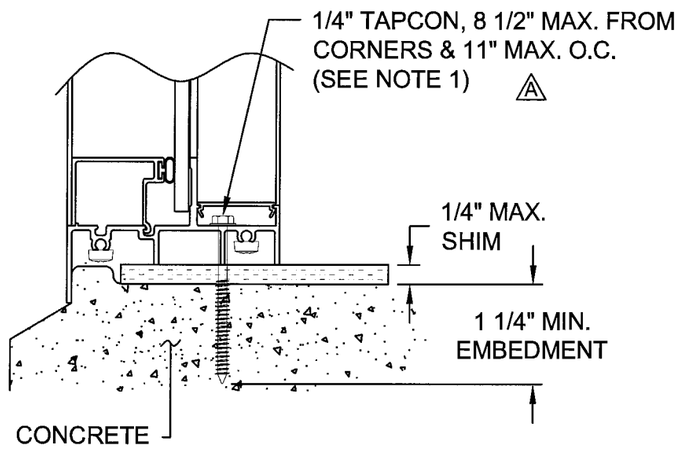

FLANGED DETAIL D (SILL ONLY)

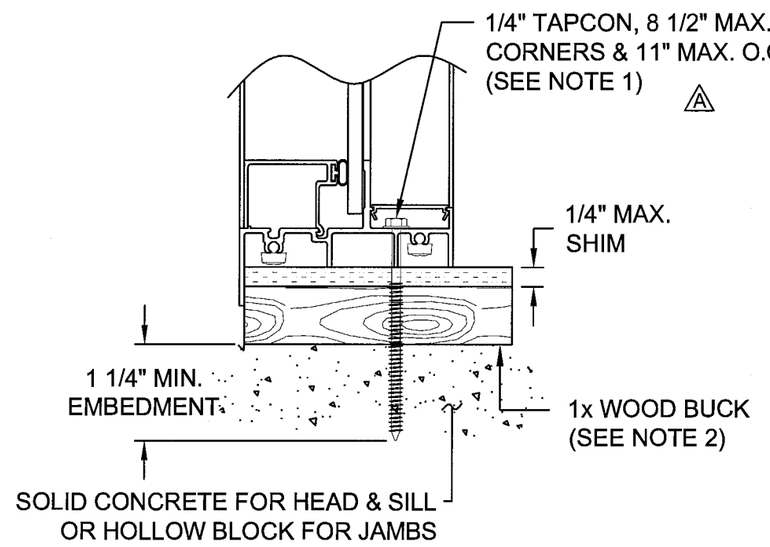

FLANGED DETAIL E

NOTES:

1. USE ONLY MIAMI-DADE COUNTY APPROVED ELCO TAPCONS. A
2. A - IN MIAMI-DADE COUNTY INSTALLATION TO THE SUBSTRATE OF WOOD BUCKS TO BE ENGINEERED, PROPERLY ATTACHED TO TRANSFER LOAD AND TO BE REVIEWED BY BUILDING OFFICIAL.
   B - OUTSIDE MIAMI-DADE COUNTY INSTALLATION TO THE SUBSTRATE OF WOOD BUCKS TO BE ENGINEERED BY OTHERS OR AS APPROVED BY BUILDING OFFICIAL.

Approved as complying with the Florida Building Code
Date 02/19/04
NOA# 03-1105.02
Miami Dade Product Control Division
By

Revsd By:	Date:	Revisions:	
Revsd By:	Date:	Revisions:	
Revsd By: F.K.	Date: 12/15/03	Revisions: A	CHANGE NOTE 1 AND FASTENER SPACING
Drawn By: F.K.	Date: 7/14/03	Checked By:	Date:

1070 TECHNOLOGY DRIVE
NOKOMIS, FL 34275

P.O. BOX 1529
NOKOMIS, FL 34274

PGT Visibly Better

Description: ANCHORAGE - HEAD, SILL AND JAMBS

Title: ALUMINUM PICTURE WINDOW, NON-IMPACT

Series/Model:	Scale:	Sheet:	Drawing No.	Rev:
PW-701	NTS	10 of 10	4259-3	A

12/16/03

Robert L. Clark, P.E.
PE #39712
Structural