MIAMI-DADE

BUILDING CODE COMPLIANCE OFFICE (BCCO)
PRODUCT CONTROL DIVISION

MIAMI-DADE COUNTY, FLORIDA
METRO-DADE FLAGLER BUILDING
140 WEST FLAGLER STREET, SUITE 1603
MIAMI, FLORIDA 33130-1563
(305) 375-2901 FAX (305) 375-2908

NOTICE OF ACCEPTANCE (NOA)

Plaza Door Company, Inc.
5900 Australian Ave. Suite #3
Mangonia Park, Fl 33407

SCOPE:
This NOA is being issued under the applicable rules and regulations governing the use of construction materials. The documentation submitted has been reviewed by Miami-Dade County Product Control Division and accepted by the Board of Rules and Appeals (BORA) to be used in Miami Dade County and other areas where allowed by the Authority Having Jurisdiction (AHJ).

This NOA shall not be valid after the expiration date stated below. The Miami-Dade County Product Control Division (In Miami Dade County) and/or the AHJ (in areas other than Miami Dade County) reserve the right to have this product or material tested for quality assurance purposes. If this product or material fails to perform in the accepted manner, the manufacturer will incur the expense of such testing and the AHJ may immediately revoke, modify, or suspend the use of such product or material within their jurisdiction. BORA reserves the right to revoke this acceptance, if it is determined by Miami-Dade County Product Control Division that this product or material fails to meet the requirements of the applicable building code.
This product is approved as described herein, and has been designed to comply with the Florida Building Code, including the High Velocity Hurricane Zone.

DESCRIPTION: Series "Titan III" Aluminum Sliding Glass Door w/ reinforcements.

APPROVAL DOCUMENT: Drawing No. **03-136R1**, titled "Titan III Series Aluminum Sliding Glass Door", sheets 1 through 4 of 4, dated 1/14/04, prepared by EngCo Inc., signed and sealed by Pedro De Figueiredo, P.E., bearing the Miami-Dade County Product Control Approval stamp with the Notice of Acceptance number and approval date by the Miami-Dade County Product Control Division.

MISSILE IMPACT RATING: None

LABELING: Each unit shall bear a permanent label with the manufacturer's name or logo, city, state and following statement: "Miami-Dade County Product Control Approved", unless otherwise noted herein.

RENEWAL of this NOA shall be considered after a renewal application has been filed and there has been no change in the applicable building code negatively affecting the performance of this product.

TERMINATION of this NOA will occur after the expiration date or if there has been a revision or change in the materials, use, and/or manufacture of the product or process. Misuse of this NOA as an endorsement of any product, for sales, advertising or any other purposes shall automatically terminate this NOA. Failure to comply with any section of this NOA shall be cause for termination and removal of NOA.

ADVERTISEMENT: The NOA number preceded by the words Miami-Dade County, Florida, and followed by the expiration date may be displayed in advertising literature. If any portion of the NOA is displayed, then it shall be done in its entirety.

INSPECTION: A copy of this entire NOA shall be provided to the user by the manufacturer or its distributors and shall be available for inspection at the job site at the request of the Building Official.
This NOA consists of this page 1 and evidence page E1, as well as approval document mentioned above.
The submitted documentation was reviewed by **Ishaq I. Chanda, P.E.**

8
1/23/4

PRODUCT CONTROL ACCEPTED

Plaza Door Company, Inc.

NOTICE OF ACCEPTANCE: EVIDENCE SUBMITTED

A. DRAWINGS

1. Manufacturer's die drawings and sections.
2. Drawing No. **03-136R1**, titled "Titan III Series Aluminum Sliding Glass Door", sheets 1 through 4 of 4, dated 1/14/04, prepared by EngCo Inc., signed and sealed by Pedro De Figueiredo, P.E.

B. TESTS

1. Test reports on 1) Air Infiltration Test, per TAS 202-94
   2) Uniform Static Air Pressure Test, Loading per TAS 202-94
   3) Water Resistance Test, per TAS 202-94
   4) Forced Entry Test, per TAS 202-94 & AAMA 1302.5

   along with marked-up drawings and installation diagram of aluminum sliding glass door, prepared by Fenestration Testing Laboratory, Inc., Test Report No. **FTL-1189**, dated July05, 1995, revised by addendum letter dated March 11, 1997, test originally witnessed by late Gilbert Diamond, P.E., reissued on 10-26-00 based on review of the test report, signed and sealed by Jose Acevedo, P.E.

C. CALCULATIONS

1. Anchor Calculations and structural analysis, dated May 17, 2003 and last revised on January 14, 2004, prepared by EngCo. Inc., signed and sealed by Pedro De Figueiredo, P.E.

D. QUALITY ASSURANCE

1. Miami Dade County Building Code Compliance Office (BCCO).

E. MATERIAL CERTIFICATIONS

1. None.

F. STATEMENTS

1. Statement letter of conformance And "No financial interest", dated May 12, 2003, reissued on Jan 28, 2004, signed and sealed by Pedro De Figueiredo, P.E.
2. Laboratory compliance statement part of the test report.

G. OTHER

1. None

Ishaq I. Chanda

Ishaq I. Chanda, P.E.
Product Control Examiner
NOA No 03-1105.03
Expiration Date: February 12, 2009
Approval Date: February 12, 2004

INDEX:

SHEET 1 of 4 - GENERAL NOTES AND COMPONENTS
SHEET 2 of 4 - ELEVATION AND DESIGN RATING
SHEET 3 of 4 - SECTION DETAILS & FRAMING ANCHORAGE
SHEET 4 of 4 - CORNER ASSEMBLY, GLASS DETAIL, HARDWARE, BILL OF MATERIAL

GENERAL NOTES:

1- CODE: THIS PRODUCT HAS BEEN TESTED AND DESIGNED IN ACCORDANCE WITH THE FLORIDA BUILDING CODE (FBC) 2001 Ed. INCLUDING HIGH VELOCITY HURRICANE ZONE (HVRZ)

2- DEFINITION: THIS PRODUCT IS AN ALUMINUM SLIDING GLASS DOOR NON IMPACT RESISTANT. (APPROVED HURRICANE SHUTTERS MUST BE INSTALLED IN ORDER TO COMPLY WITH IMPACT RESISTANT CRITERIA OF HVHZ AND OR WINDBORN DEBRIS PROTECTION AS APPLICABLE REQUIREMENTS PER FBC).

3- POSTING:

"TITAN III SERIES - NON IMPACT
ALUMINUM SLIDING GLASS DOORS
PLAZA DOOR COMPANY, INC
WEST PALM BEACH - FLORIDA
DADE COUNTY PRODUCT CONTROL APPROVED"

4- DESIGN LOADS: THE DESIGNED LOADS MUST BE CALCULATED BY A PROFESSIONAL ARCHITECT OR ENGINEER FOR EACH SPECIFIC PROJECT. THE CALCULATED DESIGNED PRESSURE MUST NOT EXCEED THE ALLOWABLE APPROVED PRESSURE.

5- MATERIAL: ALL ALUMINUM PARTS TO BE 6063-T6 ALLOY OR AS NOTED AND GLAZING TO BE 1/4" OR 5/16" FULLY TEMPERED GLASS AS SPECIFIED ON THIS APPROVAL.

6- FASTENERS: ASSEMBLY SCREWS AND ANCHORS SHALL BE AS SPECIFIED IN THE CURRENT SET OF DRAWINGS. INSTALLATION AND LOADS AS PER THIS APPROVAL. ANCHOR SPACING AND LOADS MUST NOT EXCEED THE MAXIMUM LIMITS SPECIFIED BY THIS APPROVAL.

7- USE: IT SHALL BE THE RESPONSIBILITY OF THE CONTRACTOR, ARCHITECT OR ENGINEER OF RECORD TO VERIFY THE FOLLOWING:
7.1- THE STABILITY OF THE STRUCTURE WHERE THE PRODUCT IS TO BE ATTACHED INSURING PROPER ANCHORAGE.
7.2- THE SITE SPECIFIC PROJECT CRITERIA, SUCH AS BUT NOT LIMITED TO, LOCAL CODE REQUIREMENTS, DESIGNED PRESSURES ETC.
7.3- THAT THIS APPROVAL IS ADEQUATE TO THE SPECIFIC PROJECT.

8- 33 1/3% INCREASE IN ALLOWABLE LOADS HAVE NOT BEEN USED IN THE DESIGN OF THE ANCHORS FOR THIS PRODUCT APPROVAL, EXCEPT WOOD SCREWS WITH 1.33 INCREASE FOR WIND LOAD DURATION HAVE BEEN USED.

DOOR COMPONENTS

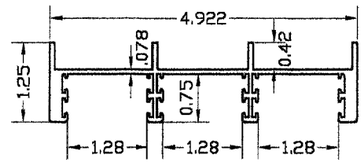

PDC-010 THREE TRACK JAMB
ALLOY: 6063-T6

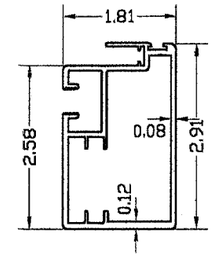

PDC-072 INTERLOCK
ALLOY: 6063-T6

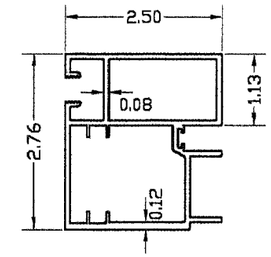

PDC-066 MEETING RAIL
ALLOY: 6063-T6

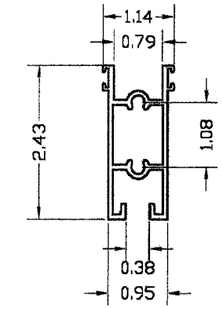

PDC-016- TOP RAIL
ALLOY: 6063-T6

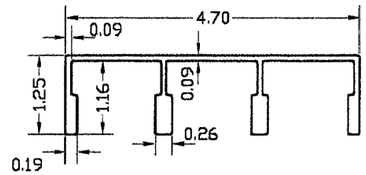

PDC-009 THREE TRACK HEADER
ALLOY: 6063-T6

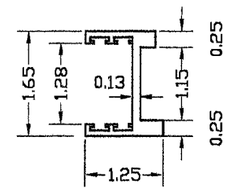

PDC-002 ASTRAGAL
ALLOY: 6063-T6

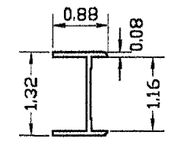

PDC-022 SCREEN
ASTRAGAL
ALLOY: 6063-T6

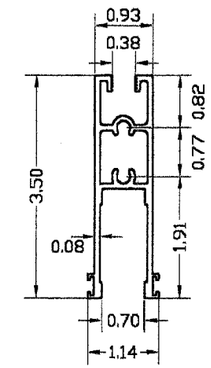

PDC-082- BOTTOM RAIL
ALLOY: 6063-T6

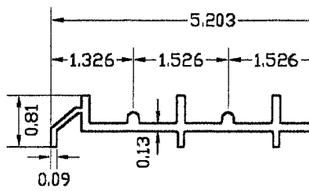

PDC-012 THREE TRACK SILL
ALLOY: 6063-T5

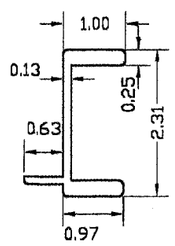

PDC-073- REINFORCEMENT
ALLOY: 6061-T6
LENGTH= FH-2 1/2"

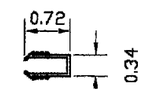

2-251-0- GLASS GASKET
WV-1174 - 1/4" & 5/16" GLASS
EXTRUDED VINYL MADE
BY WIBORG VINYL CO, INC.

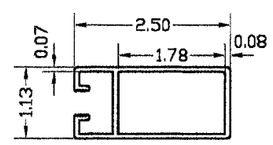

PDC-015 DOOR END RAIL
ALLOY: 6063-T6

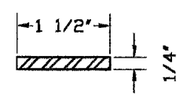

STL1- 1/4 X 1 1/2"
REINFORCEMENT
STEEL ASTM A36
LENGTH=FH-40"

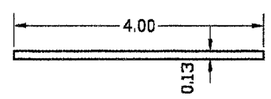

PDC-085 SILL ADAPTOR
ALLOY: 6063-T6

2-400-0
FINSEAL 7518

2-401-0
FINSEAL 7520

2-402-0
FINSEAL 7525

2-403-0
FINSEAL 8416

2-249-0
PVC BULB

2-250-0
PVC BULB

DOOR ALLOWABLE DESIGNED PRESSURES
SEE SHEET 2 OF 4 FOR PRESSURES
5/16" TEMPERED GLASS - TABLE 1
1/4" TEMPERED GLASS - TABLE 2
ALLOWABLE DESIGNED PRESSURES X SIZES.

Approved as complying with the Florida Building Code
Date February 12, 2004
NOA# 03-1105.03
Miami Dade Product Control Division
By Shay I. Chunda

MANUFACTURER:
PLAZA DOOR CO., INC
5900 AUSTRALIAN AVE.
SUITE #3
WEST PALM BEACH
FLORIDA, 33402
PHONE: (561) 842-6551
FAX: (561) 842-6541

PRODUCT:
Titan III Series
ALUMINUM SLIDING GLASS DOOR

Engineering:
EngCo Inc.
CA 8116
6971 W. SUNRISE BLVD. 104
PLANTATION, FL. 33313
TEL.: (954) 585-0304
FAX.: (954) 585-0305

JAN 22 2004

Engineer Seal
Pedro De Figueiredo
PE 52609

Date: 1/14/04
Scale: NA
Design by: PPMF

Revision:

Drawing Number
03-136R1

ELEVATIONS & DESIGN RATING

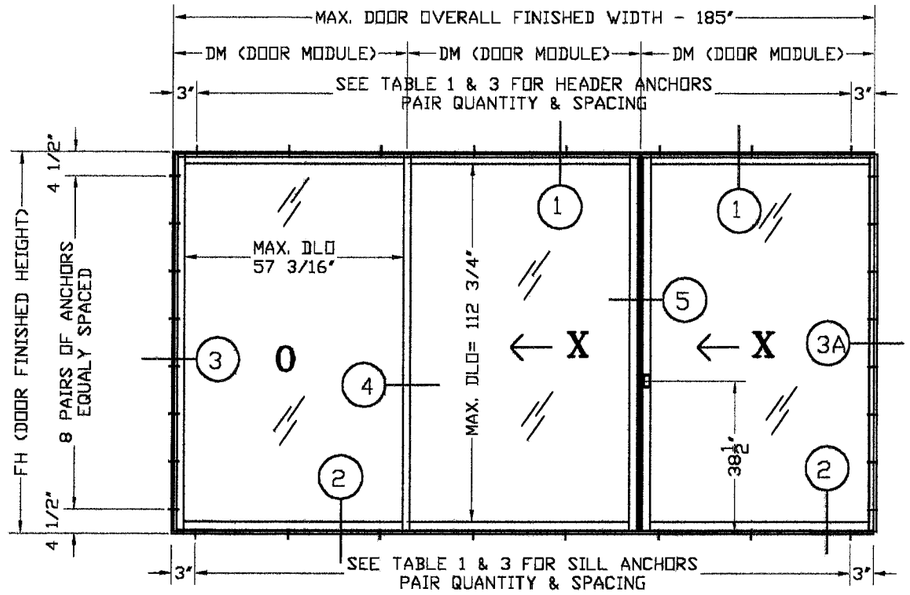

ALTERNATE CONFIGURATIONS

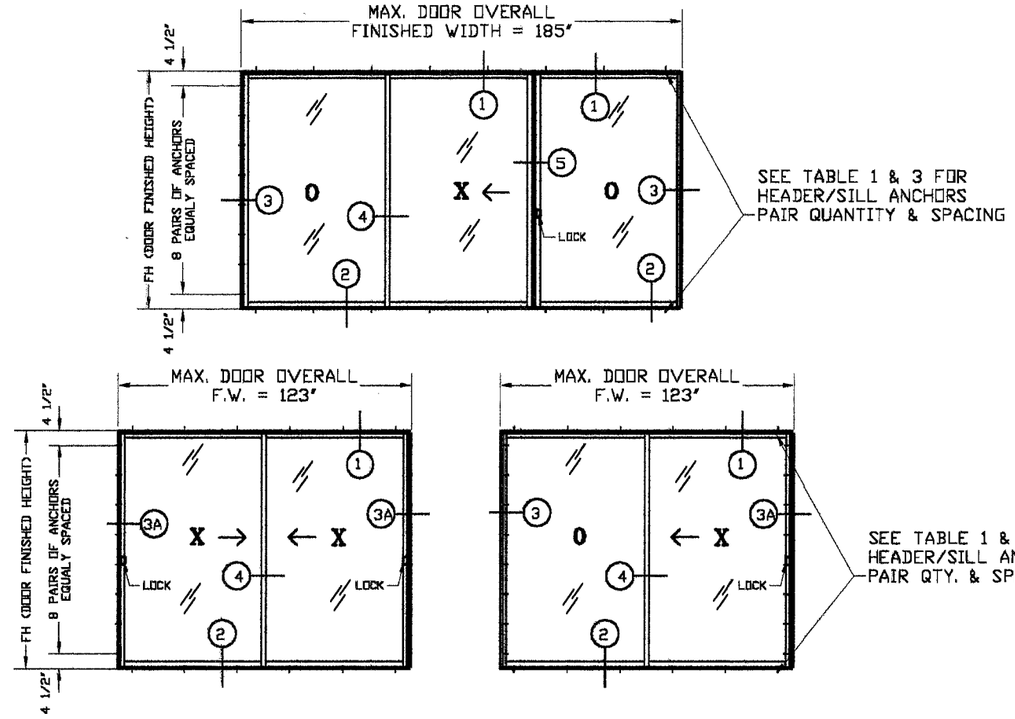

TABLE 3 – HEADER/SILL ANCHOR (A OR B)
MAXIMUM INCHES OC ANCHORS SPACING

FH	DOOR MODULE (DM) (INCHES)			
	30	36	48	61.5
84	6-(5)	7-(6)	11-(8)	18-(14)
97	6-(5)	8-(6)	10-(8)	16-(13)
120	7-(5)	8-(6)	11-(8)	13-(10)

NOTES:
1- A-(B): THE ABOVE TABLE VALUES A ARE FOR ANCHOR SPACING WHEN USING TYPE A ANCHORS INTO CONCRETE, (B) ARE FOR ANCHOR SPACING WHEN USING TYPE B ANCHORS INTO WOOD BUCK.
2- MINIMUM EMBEDMENT ARE BEYOND WALL DRESSING.
3- ANCHOR ARE BASED ON ALLOWABLE PRESSURES FROM TABLES 1 ON THIS SHEET.

TABLE 2 – 1/4" TEMPERED GLASS
ALLOWABLE DESIGNED PRESSURES (Psf)

FH	DOOR MODULE (DM) WIDTH (INCHES)			
	30	36	48	61.5
84	-210, +106	-156, +106	-121, +106	± 77
97	-187, +106	-141, +106	±100	± 77
120	-144, +106	-120, +106	± 77	± 72

NOTES:
1- USE TABLE 1 FOR TYPE AND QUANTITY

POSITIVE PRESSURES CAN BE INCREASED UP TO CORRESPONDENT NEGATIVE PRESSURE FOR APPLICATIONS MEETING THE CRITERIA OF ILLUSTRATION "Z" BELOW

ILLUSTRATION "Z"

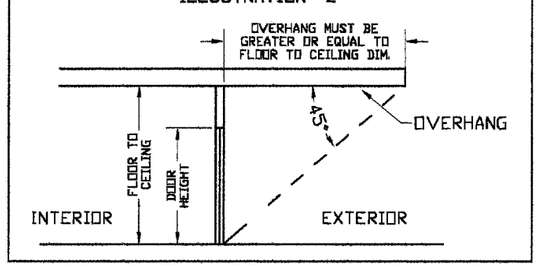

TABLE 1 – 5/16" TEMPERED GLASS
ALLOWABLE DESIGNED PRESSURES (Psf) AND MINIMUM QUANTITY OF ANCHORS (IN PAIRS)

FH	DOOR MODULE WIDTH (DM) (INCHES)																			
	30					36					48					61.5				
	DP	ANCHORS QTY.				DP	ANCHORS QTY.				DP	ANCHORS QTY.				DP	ANCHORS QTY.			
		A	B	A	B		A	B	A	B		A	B	A	B		A	B	A	B
		XO XX	XO XX	OXX OXO	OXX OXO		XO XX	XO XX	OXX OXO	OXX OXO		XO XX	XO XX	OXX OXO	OXX OXO		XO XX	XO XX	OXX OXO	OXX OXO
84	+106 -210	10	12	15	18	+106 -186	11	12	16	18	+106 -131	10	14	14	19	+77 -77	8	10	11	14
97	+106 -187	10	12	15	18	+106 -157	10	12	14	18	+121 -106	10	14	15	19	+77 -77	9	10	12	15
120	+106 -144	9	12	13	18	+106 -120	10	12	14	18	+93 -93	10	14	14	19	+76 -76	10	13	15	19

NOTES:
1- ANCHOR TYPES:
A- 1/4" TAPCON BY ELCO WITH 1 3/4" MIN. EMBEDMENT INTO 3350 psi CONCRETE
B- 1/4" TAPCON BY ELCO WITH 1 1/2" MIN. EMBEDMENT INTO 2X PT WOOD (SG>=.55)
2- SEE TABLE 3 FOR ANCHOR SPACING

Approved as complying with the Florida Building Code
Date FEB 12, 2004
NOA# 03-1105.03
Miami Dade Product Control Division
By Ishan L. Chanda

MANUFACTURER:
PLAZA DOOR CO., INC
5900 AUSTRALIAN AVE.
SUITE #3
WEST PALM BEACH
FLORIDA, 33402
PHONE: (561) 842-6551
FAX: (561) 842-6541

PRODUCT:
Titan III Series
ALUMINUM SLIDING GLASS DOOR

Engineering:
EngCo Inc.
CA 8116
6971 W. SUNRISE BLVD. 104
PLANTATION, FL. 33313
TEL.: (954) 585-0304
FAX.: (954) 585-0305

JAN 22 2004

Engineer Seal
Pedro De Figueiredo
PE 52609

Date: 1/14/04
Scale: NA
Design by: PPMF

Revision:

Drawing Number
03-136R1

TYPICAL SECTION DETAILS

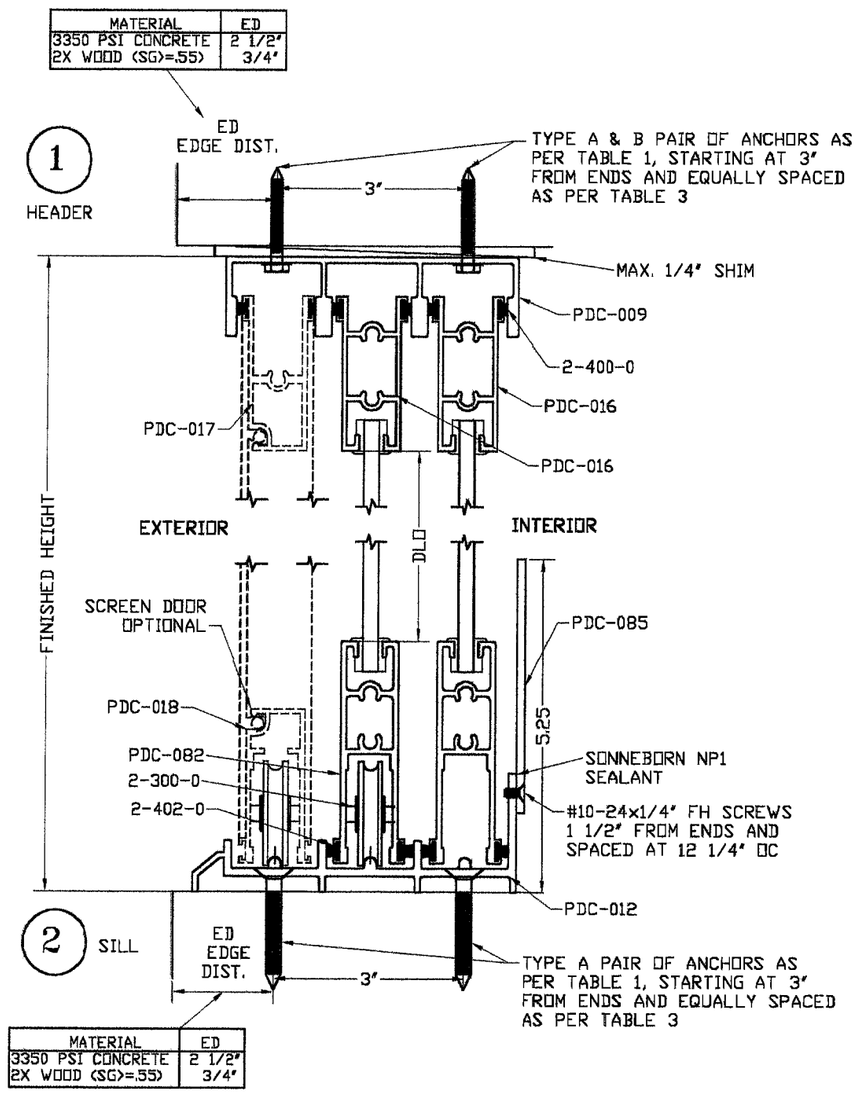

MATERIAL	ED
3350 PSI CONCRETE	2 1/2"
2X WOOD (SG>=.55)	3/4"

MATERIAL	ED
3350 PSI CONCRETE	2 1/2"
2X WOOD (SG>=.55)	3/4"

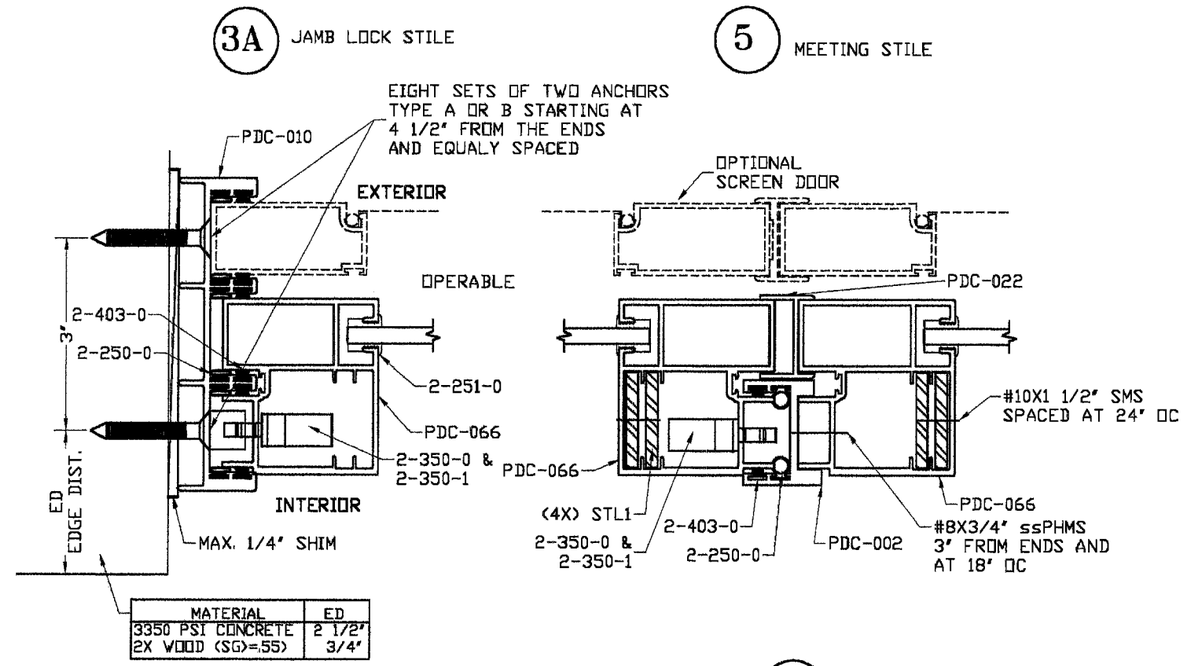

MATERIAL	ED
3350 PSI CONCRETE	2 1/2"
2X WOOD (SG>=.55)	3/4"

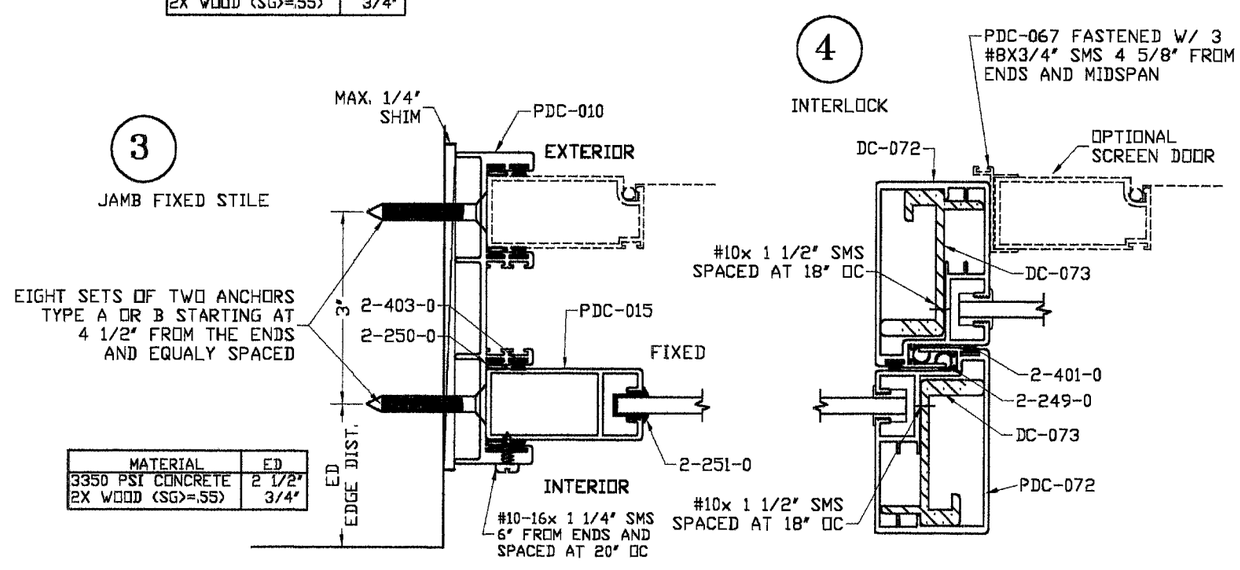

MATERIAL	ED
3350 PSI CONCRETE	2 1/2"
2X WOOD (SG>=.55)	3/4"

ANCHOR TYPES:
A- 1/4" TAPCON BY ELCO WITH 1 3/4" MIN. EMBEDMENT INTO 3350 psi CONCRETE
B- 1/4" TAPCON BY ELCO WITH 1 1/2" MIN. EMBEDMENT INTO 2X PT WOOD (SG>=.55)

Approved as complying with the Florida Building Code
Date FEB 12, 2004
NOA# 03-1107.03
Miami Dade Product Control Division
By Shaq I. Chanda

MANUFACTURER:
PLAZA DOOR CO., INC
5900 AUSTRALIAN AVE.
SUITE #3
WEST PALM BEACH
FLORIDA, 33402
PHONE: (561) 842-6551
FAX: (561) 842-6541

PRODUCT:
Titan III Series
ALUMINUM SLIDING GLASS DOOR

Engineering:
EngCo Inc.
CA 8116
6971 W. SUNRISE BLVD. 104
PLANTATION, FL. 33313
TEL.: (954) 585-0304
FAX.: (954) 585-0305

JAN 22 2004

Engineer Seal
Pedro De Figueiredo
PE 52609

Date: 1/14/04
Scale: NA
Design by: PPMF

Revision:

Drawing Number
03-136R1

FRAMING CORNER ASSEMBLY

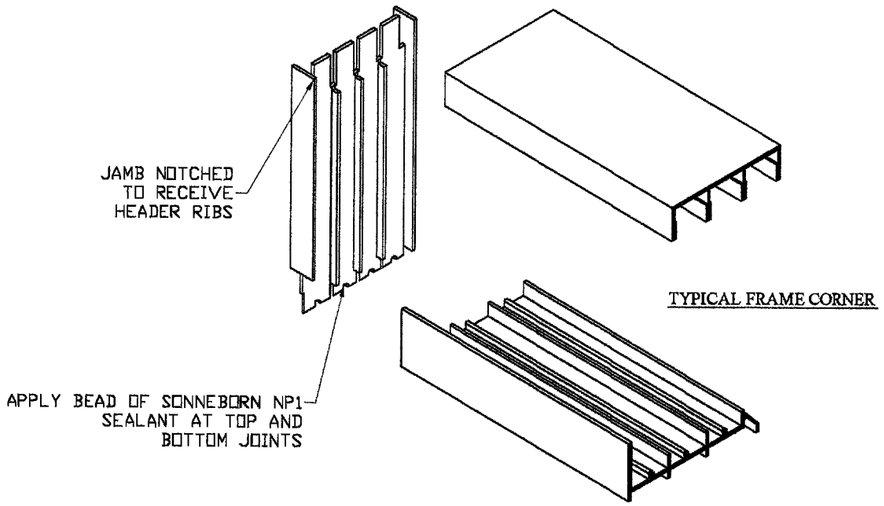

GLAZING DETAIL

SEE DESIGNED PRESSURES TABLES 1 OR 2 ON SHEET 2 OF 4

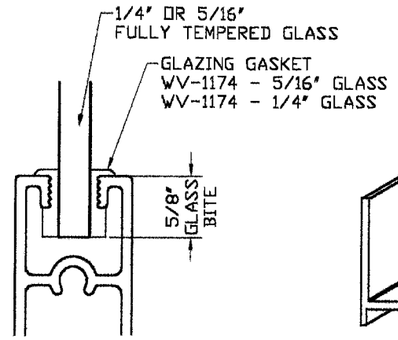

SILL DRAINAGE

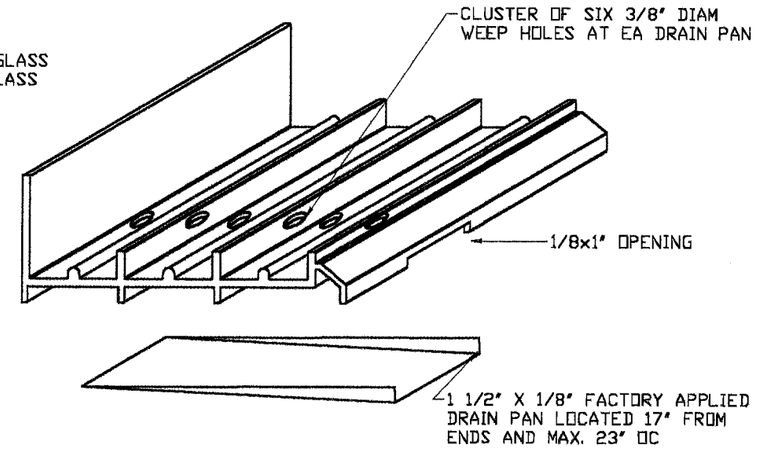

DOOR CORNER ASSEMBLY

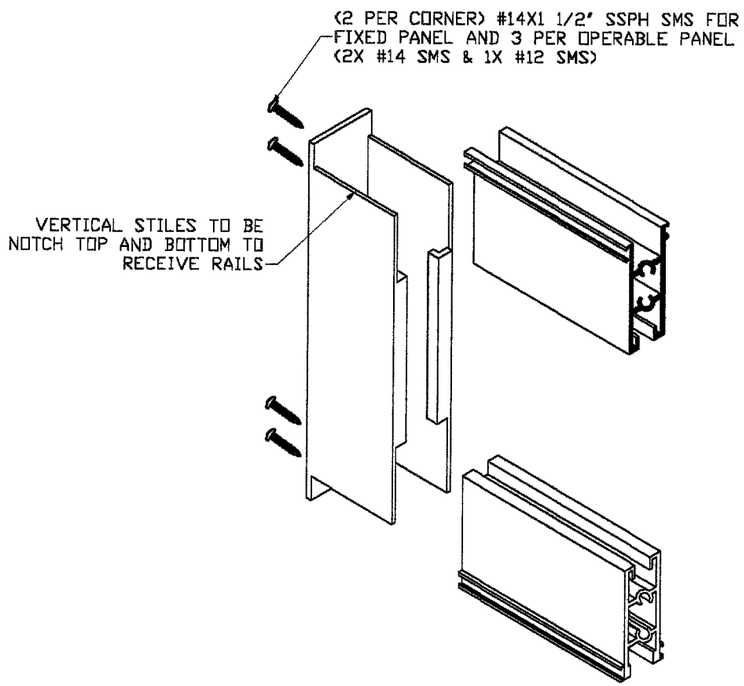

BILL OF MATERIALS

#	DESCRIPTION	MATERIAL	SUPPLIER
1	PDC-009 FRAME HEAD	ALUM. 6063-T6	PLAZA DOOR
2	PDC-012 FRAME SILL	ALUM. 6063-T6	PLAZA DOOR
3	PDC-010 FRAME JAMB	ALUM. 6063-T6	PLAZA DOOR
4	PDC-016 DOOR TOP RAIL	ALUM. 6063-T6	PLAZA DOOR
4A	PDC-082 DOOR BOTTOM RAIL	ALUM. 6063-T6	PLAZA DOOR
5	PDC-072 TITAN INTERLOCK	ALUM. 6063-T6	PLAZA DOOR
6	PDC-002 APPLIED ASTRAGAL	ALUM. 6063-T6	PLAZA DOOR
7	PDC-015 FIXED LOCK STILE	ALUM. 6063-T6	PLAZA DOOR
8	PDC-022 ASTRAGAL ADAPTOR	ALUM. 6063-T6	PLAZA DOOR
9	PDC-066 TITAN LOCK STILE	ALUM. 6063-T6	PLAZA DOOR
10	1/4" OR 5/16" PANEL	TEMPERED GLASS	H. G. P.
11	2-251-0 GLAZING VINYL	EXTRUDED VINYL	WIBORG WV-1174/75
12	2-400-0 SCHLEGAL FINSEAL		SCHLEGAL 7518-270
13	2-401-0 SCHLEGAL FINSEAL		SCHLEGAL 7520-270
14	2-402-0 SCHLEGAL FINSEAL		SCHLEGAL 7525-270
15	2-403-0 SCHLEGAL FINSEAL		SCHLEGAL 8416-270
16	2-249-0 VINYL BULB		WIBORG WV-3180
17	2-250-0 VINYL BULB		WIBORG WV-3165
18	2-300-0 ADJUSTABLE ROLLER		SAUDER ENG. #P-13
19	2-350-0 DEADLOCK		ADAMS RITE 1847-02SS
20	2-351-0 LOCK EXTRUSION		ADAMS RITE 4430
21	3-001-0 LOCK KEEPER	STAINLESS STEEL	PLAZA DOOR
22	3-008-0 TRACK RAIN PAN	ALUMINUM	PLAZA DOOR
23	3-009-0 HP WEATHER TAB		PLAZA DOOR
24	PDC-073 INTERLOCK STIFFENER	ALUM. 6063-T6	PLAZA DOOR
25	PDC-017 SCREEN TOP RAIL	ALUM. 6063-T6	PLAZA DOOR
26	PDC-018 SCREEN BOTTOM RAIL	ALUM. 6063-T6	PLAZA DOOR
27	PDC-019 SCREEN END RAIL	ALUM. 6063-T6	PLAZA DOOR
28	PDC-022 SCREEN ASTRAGAL	ALUM. 6063-T6	PLAZA DOOR
29	PDC-085 HI-RISE ADAPTER	ALUM. 6063-T6	PLAZA DOOR
30	STL1 STEEL REINFORCEMENT	A36 STEEL	PLAZA DOOR

Approved as complying with the Florida Building Code
Date FEB 12 2004
NOA# 03-1105.03
Miami Dade Product Control Division
By Shaq I. Chanda

MANUFACTURER:
PLAZA DOOR CO., INC
5900 AUSTRALIAN AVE.
SUITE #3
WEST PALM BEACH
FLORIDA, 33402
PHONE: (561) 842-6551
FAX: (561) 842-6541

PRODUCT:
Titan III Series
ALUMINUM SLIDING GLASS DOOR

Engineering:
EngCo Inc.
CA 8116
6971 W. SUNRISE BLVD. 104
PLANTATION, FL. 33313
TEL.: (954) 585-0304
FAX.: (954) 585-0305

JAN 2 2 2004

Engineer Seal
Pedro De Figueiredo
PE 52609

Date: 1/14/04
Scale: NA
Design by: PPMF

Revision:

Drawing Number
03-136R1

Sheet
4 of 4