MIAMI-DADE

BUILDING CODE COMPLIANCE OFFICE (BCCO)
PRODUCT CONTROL DIVISION

MIAMI-DADE COUNTY, FLORIDA
METRO-DADE FLAGLER BUILDING
140 WEST FLAGLER STREET, SUITE 1603
MIAMI, FLORIDA 33130-1563
(305) 375-2901 FAX (305) 375-2908

NOTICE OF ACCEPTANCE (NOA)

Andersen Corporation
100 Fourth Ave. North
Bayport, MN 55003-1096

SCOPE:
This NOA is being issued under the applicable rules and regulations governing the use of construction materials. The documentation submitted has been reviewed by Miami-Dade County Product Control Division and accepted by the Board of Rules and Appeals (BORA) to be used in Miami Dade County and other areas where allowed by the Authority Having Jurisdiction (AHJ).

This NOA shall not be valid after the expiration date stated below. The Miami-Dade County Product Control Division (In Miami Dade County) and/or the AHJ (in areas other than Miami Dade County) reserve the right to have this product or material tested for quality assurance purposes. If this product or material fails to perform in the accepted manner, the manufacturer will incur the expense of such testing and the AHJ may immediately revoke, modify, or suspend the use of such product or material within their jurisdiction. BORA reserves the right to revoke this acceptance, if it is determined by Miami-Dade County Product Control Division that this product or material fails to meet the requirements of the applicable building code.

This product is approved as described herein, and has been designed to comply with the Florida Building Code, including the High Velocity Hurricane Zone.
DESCRIPTION: Series "Permashield" Vinyl Clad Outswing Wood Casement Window
APPROVAL DOCUMENT: Drawing No. **W03-72** titled " 'Perma-Shield' Vinyl Clad WD. Casement WDW", sheets 1 through 5 of 5, dated 08/22/03, prepared by Al-Farooq Corporation, signed and sealed by Humayoun Farooq, P.E., bearing the Miami-Dade County Product Control Revision stamp with the Notice of Acceptance number and expiration date by the Miami-Dade County Product Control Division.
MISSILE IMPACT RATING: None
LABELING: Each unit shall bear a permanent label with the manufacturer's name or logo, city, state and following statement: "Miami-Dade County Product Control Approved", unless otherwise noted herein.
RENEWAL of this NOA shall be considered after a renewal application has been filed and there has been no change in the applicable building code negatively affecting the performance of this product.
TERMINATION of this NOA will occur after the expiration date or if there has been a revision or change in the materials, use, and/or manufacture of the product or process. Misuse of this NOA as an endorsement of any product, for sales, advertising or any other purposes shall automatically terminate this NOA. Failure to comply with any section of this NOA shall be cause for termination and removal of NOA.
ADVERTISEMENT: The NOA number preceded by the words Miami-Dade County, Florida, and followed by the expiration date may be displayed in advertising literature. If any portion of the NOA is displayed, then it shall be done in its entirety.
INSPECTION: A copy of this entire NOA shall be provided to the user by the manufacturer or its distributors and shall be available for inspection at the job site at the request of the Building Official.
This NOA **revises NOA # 03-0415.14** and consists of this page 1and evidence pages E1 and E2 as well as approval document mentioned above.
The submitted documentation was reviewed by **Manuel Perez, P.E.**

PRODUCT CONTROL ACCEPTED

Andersen Corporation

NOTICE OF ACCEPTANCE: EVIDENCE SUBMITTED

A. DRAWINGS

1. Manufacturer's die drawings and sections.
2. Drawing No. **W03-72** titled " 'Perma-Shield' Vinyl Clad WD. Casement WDW", sheets 1 through 5 of 5, dated 08/22/03, prepared by Al Farooq Corporation, signed and sealed by Humayoun Farooq, P.E.

B. TESTS

1. Test reports on 1) Air Infiltration Test, per FBC, TAS 202-94
   2) Uniform Static Air Pressure Test, Loading per FBC, TAS 20294
   3) Water Resistance Test, per FBC, TAS 202-94
   4) Forced Entry Test, per FBC 2411 3.2.1 and TAS 202-94

   along with installation diagram of Model CXW16 single panel vinyl clad wood casement windows (3' x 6') marked-up by Architectural Testing Inc., Test Report No. **ATI-02-31165.01**, dated 01/28/99, signed and sealed by Allen N. Reeves, P.E. ***'Submitted under NOA#03-0415.14"***
2. Test reports on 1) Air Infiltration Test, per FBC, TAS 202-94
   2) Uniform Static Air Pressure Test, Loading per FBC, TAS 20294
   3) Water Resistance Test, per FBC, TAS 202-94
   4) Forced Entry Test, per FBC 2411 3.2.1 and TAS 202-94

   along with installation diagram of Model C15 single panel vinyl clad wood casement windows (2' x 6') marked-up by Architectural Testing Inc., Test Report No. **ATI-02-31166.01**, dated 01/28/99, signed and sealed by Allen N. Reeves, P. E. ***"Submitted under NOA#03-0415.14"***
3. Test reports on 1) Air Infiltration Test, per FBC, TAS 202-94
   2) Uniform Static Air Pressure Test, Loading per FBC, TAS 20294
   3) Water Resistance Test, per FBC, TAS 202-94
   4) Forced Entry Test, per FBC 2411 3.2.1 and TAS 202-94

   along with installation diagram of Model C15 single panel vinyl clad wood casement windows marked-up by Architectural Testing Inc., Test Report No. **FLT-02-33003.01**, dated 02/08/01, signed and sealed by Allen N. Reeves, P. E.

C. CALCULATIONS

1. Achor calculations, ASTM-E1300-98, and sructural analysis, prepared by AL-Farooq Corporation, dated 09/26/03, signed and sealed by Humayoun Farooq, P.E
2. Achor calculations and comparative analysis, Project #99-0620, dated June 23, 1999, with revision #1 dated May 18, 2000, prepared, signed and sealed by Richard Boyette, P.E. ***"Submitted under NOA-03-0415.14"***

Manuel Perez, P.E.
Product Control Examiner
NOA No 03-1110.01
Expiration Date: June 22, 2008
Approval Date: January 08, 2004

Andersen Corporation

NOTICE OF ACCEPTANCE: EVIDENCE SUBMITTED

D. QUALITY ASSURANCE

1. Miami-Dade County Building Code Compliance Office

E. MATERIAL CERTIFICATIONS

1. None

F. STATEMENTS

1. Statement letter of conformance, dated 09/26/03, signed and sealed by Humayoun Farooq, P.E.
2. Statement letter of no financial interest, dated 09/26/03, signed & sealed by Humayoun Farooq, P.E.

G. OTHER

1. Notice of Acceptance No. **03-0415.14** Andersen Corporation, Series "Permashield Vinyl Clad Outswing Wood Casement Window", approved on 05/15/03 and expiring on 6/22/08.
2. Letter from the consultant stating that the product is in compliance with Florida Building Code (FBC).

Manuel Perez, P.E.
Product Control Examiner
NOA No 03-1110.01
Expiration Date: June 22, 2008
Approval Date: January 08, 2004

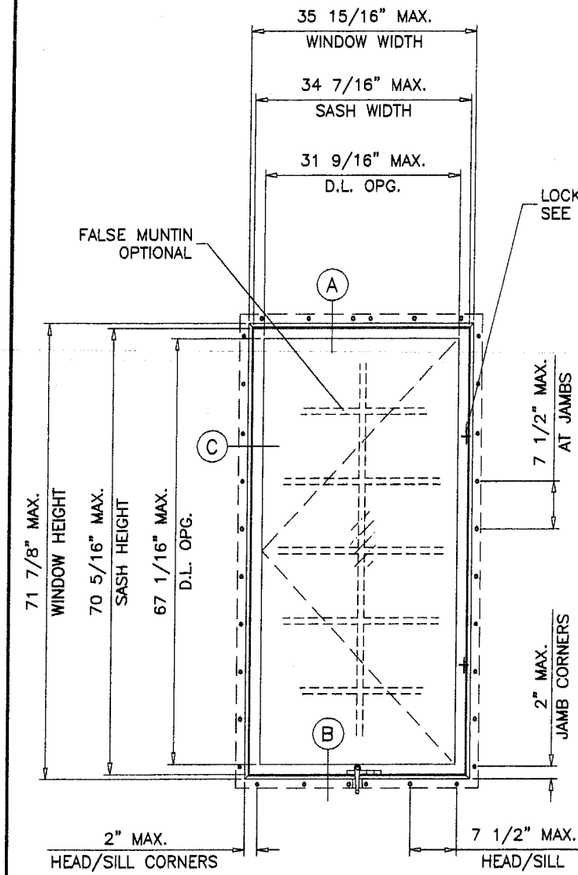

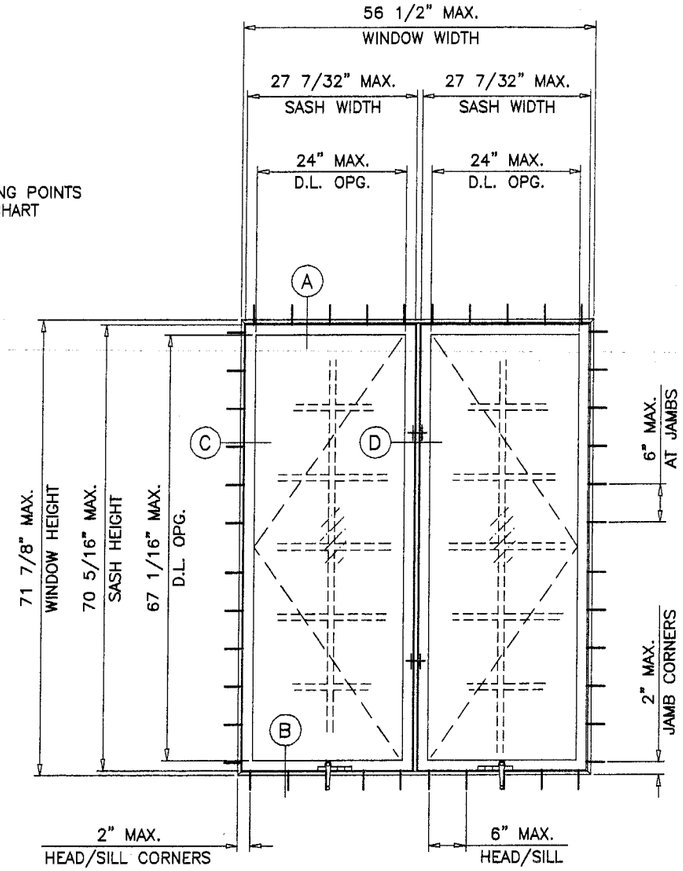

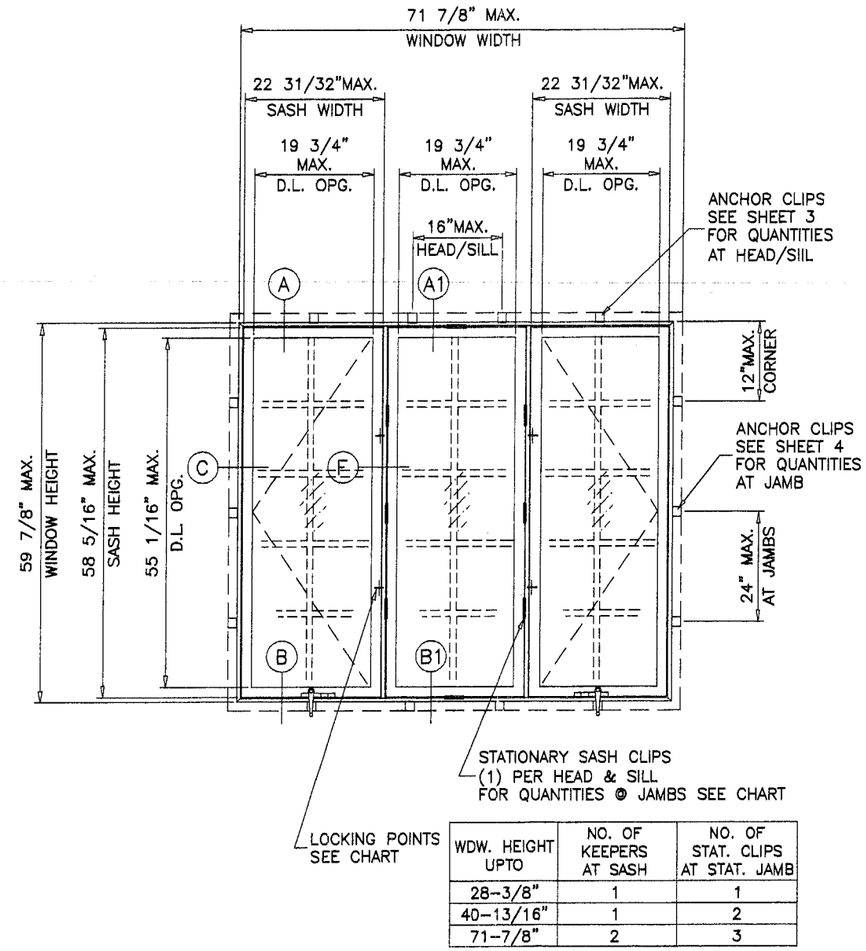

WDW. HEIGHT UPTO	NO. OF KEEPERS AT SASH	NO. OF STAT. CLIPS AT STAT. JAMB
28-3/8"	1	1
40-13/16"	1	2
71-7/8"	2	3

'PERMA-SHIELD' VINYL CLAD WOOD CASEMENT WINDOW

WINDOWS ARE NOT RATED FOR IMPACT. AND REQUIRE PROTECTION BY MIAMI-DADE COUNTY APPROVED IMPACT RESISTANT SHUTTERS.

APPROVAL APPLIES TO SINGLE, DOUBLE AND TRIPLE WINDOWS IN ANY COMBINATION OF VENTING OR STATIONARY UNITS.

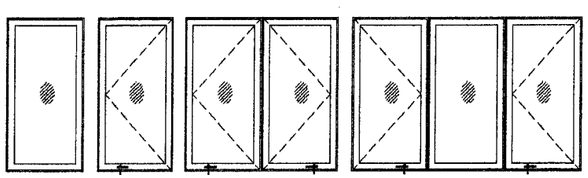

THIS PRODUCT IS DESIGNED TO COMPLY WITH THE HIGH VELOCITY HURRICANE ZONE OF THE 2001 FLORIDA BUILDING CODE.
ALSO FOR WIND LOADS AS PER ASCE 7-88. ASCE 7-93, ASCE 7-95 OR ASCE 7-98 AS REQUIRED BY PREVAILING BUILDING CODE.

WOOD BUCKS BY OTHERS (MIN. 2X4 GRADE 2 SYP), MUST BE ANCHORED PROPERLY TO TRANSFER LOADS TO THE STRUCTURE.

ANCHORS SHALL BE AS LISTED, SPACED AS SHOWN ON DETAILS. ANCHOR EMBEDMENT TO BASE MATERIAL SHALL BE BEYOND WALL DRESSING OR STUCCO.

ANCHORING OR LOADING CONDITIONS NOT SHOWN IN THESE DETAILS ARE NOT PART OF THIS APPROVAL.

TYPICAL ELEVATIONS

TESTED UNITS

WINDOWS CAN BE INSTALLED WITH ANY OF THE FOLLOWING OPTIONS

OPTION 1: BY USING FASTENERS THRU INSTALLATION FLANGE AT 2" FROM CORNERS AND 7-1/2" O.C. MAX.

OPTION 2: BY USING FASTENERS THRU WINDOW FRAME INTO STRUCTURE AT 2" FROM CORNERS AND 6" O.C. MAX.

OPTION 3: BY USING FASTENERS THRU ANCHOR CLIPS AT 12" FROM CORNERS AND 24" O.C. MAX.

SEE SHEETS 3 AND 4 FOR DETAILS.

Engr: DR. HUMAYOUN FAROOQ
STRUCTURES
FLA. PE # 13557
C.A.N. 3538
OCT 2-8 2003

PRODUCT REVISED
as complying with the Florida Buiding Code
Acceptance No. 03-1110.01
Expiration Date JUNE 22, 2008
By Manuel Perez
Miami-Dade Product Control Division

AL-FAROOQ CORPORATION
ENGINEERS, PLANNERS & PRODUCT DESIGN
1235 SW 87 AVE
MIAMI, FLORIDA 33174
TEL (305) 264-8100 FAX. (305) 262-6978
COMP-ANL\W03-72AC

'PERMA-SHIELD' VINYL CLAD WD. CASEMENT WDW.

ANDERSEN CORPORATION
100 FOURTH AVE. NORTH
BAYPORT, MN. 55003-1096
TEL (800) 426-7691 FAX (-)

revisions:			
no	date	by	description

date: 08-22-03
scale: 1/2"=1'-0"
dr. by: HAMID
chk. by:

drawing no.
W03-72

DESIGN LOAD CAPACITY – PSF (SINGLE UNITS)
VENTING (X), STATIONARY (O)

WINDOW DESCRIPTION	UNIT WIDTH INCHES	UNIT HT. INCHES	GLASS TYPE 'A' & 'A1' EXT. (+)	GLASS TYPE 'A' & 'A1' INT. (–)	GLASS TYPE 'B' EXT. (+)	GLASS TYPE 'B' INT. (–)
CR12	17"	24–1/8"	75.0	174.2	75.0	174.2
CN12	20–1/2"		75.0	144.4	75.0	144.4
C12	24–1/8"		75.0	122.7	75.0	122.7
CW12	28–3/8"		75.0	104.3	75.0	104.3
CR125	17"	28–3/8"	75.0	185.1	75.0	185.1
CN125	20–1/2"		75.0	153.5	75.0	153.5
C125	24–1/8"		75.0	130.4	75.0	130.4
CW125	28–3/8"		75.0	110.9	75.0	110.9
CR13	17"	35–15/16"	75.0	150.5	75.0	175.4
CN13	20–1/2"		75.0	117.2	75.0	145.4
C13	24–1/8"		75.0	104.4	75.0	123.6
CW13	28–3/8"		75.0	101.3	75.0	105.1
CXW13	35–15/16"		75.0	81.7	75.0	83.0
CR135	17"	40–13/16"	75.0	136.3	75.0	154.4
CN135	20–1/2"		75.0	99.2	75.0	128.1
C135	24–1/8"		75.0	90.4	75.0	108.8
CW135	28–3/8"		75.0	82.8	75.0	92.5
CXW135	35–15/16"		50.0	72.7	50.0	73.0
CR14	17"	48"	75.0	125.8	75.0	153.2
CN14	20–1/2"		75.0	87.3	75.0	127.0
C14	24–1/8"		70.6	70.6	70.6	107.9
CW14	28–3/8"		69.7	69.7	69.7	91.8
CXW14	35–15/16"		50.0	61.6	50.0	72.5
CR145	17"	52–13/16"	75.0	123.7	75.0	144.4
CN145	20–1/2"		75.0	80.5	75.0	119.7
C145	24–1/8"		63.5	63.5	63.5	101.7
CW145	28–3/8"		50.0	57.4	50.0	86.5
CXW145	35–15/16"		50.0	55.4	50.0	68.3
CR15	17"	59–7/8"	75.0	117.0	75.0	127.3
CN15	20–1/2"		72.4	72.4	75.0	105.6
C15	24–1/8"		55.1	55.1	74.9	89.7
CW15	28–3/8"		50.0	50.2	50.0	76.3
CXW15	35–15/16"		48.4	48.4	50.0	60.2
CR155	17"	64–13/16"	75.0	116.5	75.0	117.6
CN155	20–1/2"		68.0	72.2	68.0	97.5
C155	24–1/8"		50.0	51.8	50.0	82.9
CW155	28–3/8"		43.0	43.0	50.0	70.5
CXW155	35–15/16"		44.5	44.5	50.0	55.6
CR16	17"	71–7/8"	59.0	93.6	59.0	98.2
CN16	20–1/2"		50.0	70.4	50.0	82.2
C16	24–1/8"		47.9	47.9	50.0	70.8
CW16	28–3/8"		38.7	38.7	50.0	61.3
CXW16	35–15/16"		37.4	37.4	50.0	50.2

DESIGN LOAD CAPACITY – PSF (DOUBLE UNITS)
XX, OX, XO OR OO

WINDOW DESCRIPTION	UNIT WIDTH INCHES	UNIT HT. INCHES	GLASS TYPE 'A' & 'A1' EXT. (+)	GLASS TYPE 'A' & 'A1' INT. (–)	GLASS TYPE 'B' EXT. (+)	GLASS TYPE 'B' INT. (–)
CR23	33–3/4"	35–15/16"	65.0	119.2	65.0	119.2
CN23	40–3/4"		65.0	114.0	65.0	114.0
C23	48"		65.0	104.2	65.0	108.6
CW23	56–1/2"		65.0	100.0	65.0	100.0
CR235	33–3/4"	40–13/16"	65.0	107.4	65.0	107.4
CN235	40–3/4"		65.0	98.5	65.0	103.1
C235	48"		65.0	90.0	65.0	98.6
CW235	56–1/2"		50.0	82.8	50.0	88.1
CR24	33–3/4"	48"	65.0	93.7	65.0	93.7
CN24	40–3/4"		65.0	86.6	65.0	90.4
C24	48"		65.0	70.2	65.0	86.8
CW24	56–1/2"		50.0	69.7	50.0	74.9
CR245	33–3/4"	52–13/16"	65.0	86.4	65.0	86.4
CN245	40–3/4"		55.1	77.6	55.1	83.5
C245	48"		50.0	63.2	50.0	80.1
CW245	56–1/2"		50.0	57.4	50.0	68.0
CR25	33–3/4"	59–7/8"	50.0	77.4	50.0	77.4
CN25	40–3/4"		50.0	71.5	50.0	75.1
C25	48"		50.0	54.7	50.0	70.6
CW25	56–1/2"		50.0	50.2	50.0	60.0
CR255	33–3/4"	64–13/16"	50.0	72.2	50.0	72.2
CN255	40–3/4"		50.0	70.1	50.0	70.1
C255	48"		50.0	51.5	50.0	65.3
CW255	56–1/2"		42.8	42.8	50.0	55.4
CR26	33–3/4"	71–7/8"	50.0	65.9	50.0	65.9
CN26	40–3/4"		50.0	64.1	50.0	64.1
C26	48"		47.5	47.5	50.0	57.8
CW26	56–1/2"		38.5	38.5	50.0	50.0

DESIGN LOAD CAPACITY – PSF (TRIPLE UNITS)
XOX, OOX, XOO, OOO OR XXX

WINDOW DESCRIPTION	UNIT WIDTH INCHES	UNIT HT. INCHES	GLASS TYPE 'A' & 'A1' EXT. (+)	GLASS TYPE 'A' & 'A1' INT. (–)	GLASS TYPE 'B' EXT. (+)	GLASS TYPE 'B' INT. (–)
C33	71–7/8"	35–15/16"	45.0	75.1	45.0	75.1
C335	71–7/8"	40–13/16"	45.0	66.2	45.0	66.2
C34	71–7/8"	48"	45.0	56.2	45.0	56.2
C345	71–7/8"	52–13/16"	45.0	51.1	45.0	51.1
C35	71–7/8"	59–7/8"	45.0	45.1	45.0	45.1

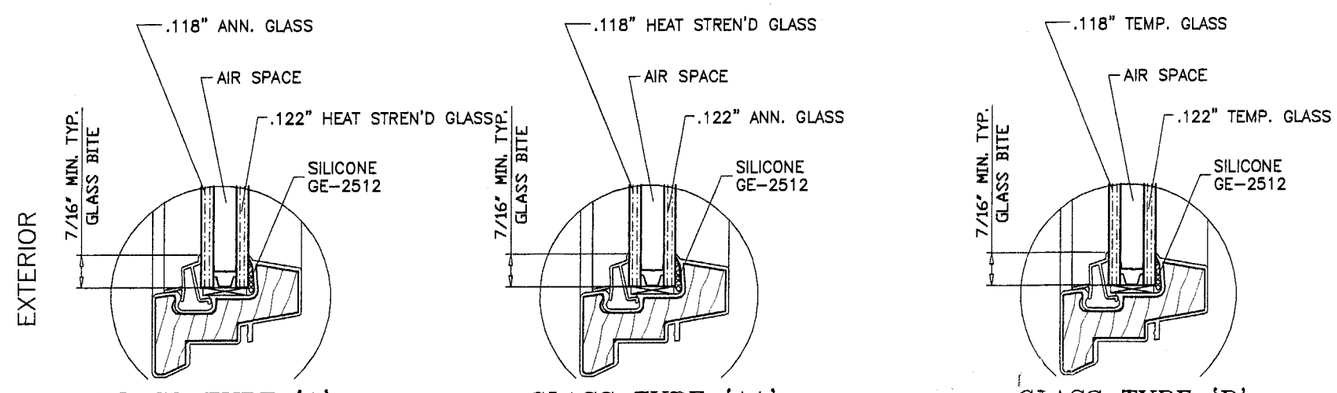

GLASS TYPE 'A' GLASS TYPE 'A1' GLASS TYPE 'B'

GLAZING OPTIONS

Engr: DR. HUMAYOUN FAROOQ
STRUCTURES
FLA. PE # 16557
C.A.N. 3538

OCT 28 2003

PRODUCT REVISED
as complying with the Florida Building Code
Acceptance No. 03-1110.01
Expiration Date JUNE 22, 2008
By Manuel Perez
Miami Dade Product Control Division

AL-FAROOQ CORPORATION
ENGINEERS, PLANNERS & PRODUCT DESIGN
1235 SW 87 AVE
MIAMI, FLORIDA 33174
TEL. (305) 264-8100 FAX. (305) 262-6978
COMP-ANL\W03-72AC

'PERMA-SHIELD' VINYL CLAD WD. CASEMENT WDW.

ANDERSEN CORPORATION
100 FOURTH AVE. NORTH
BAYPORT, MN. 55003-1096
TEL (800) 426-7691 FAX (–)

revisions:

no	date	by	description

date: 08-22-03
scale: 1/2" = 1"
dr. by: HAMID
chk. by:

drawing no. W03-72

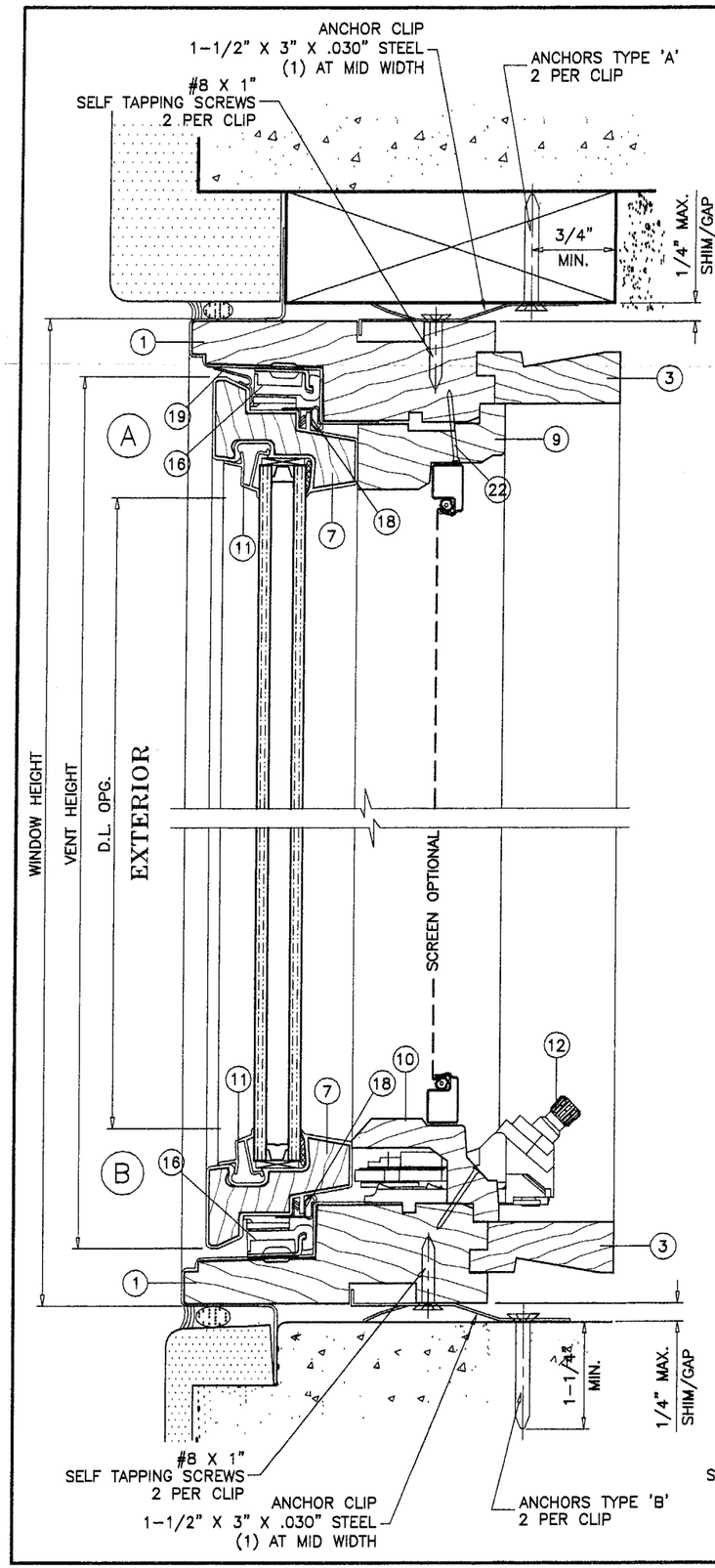

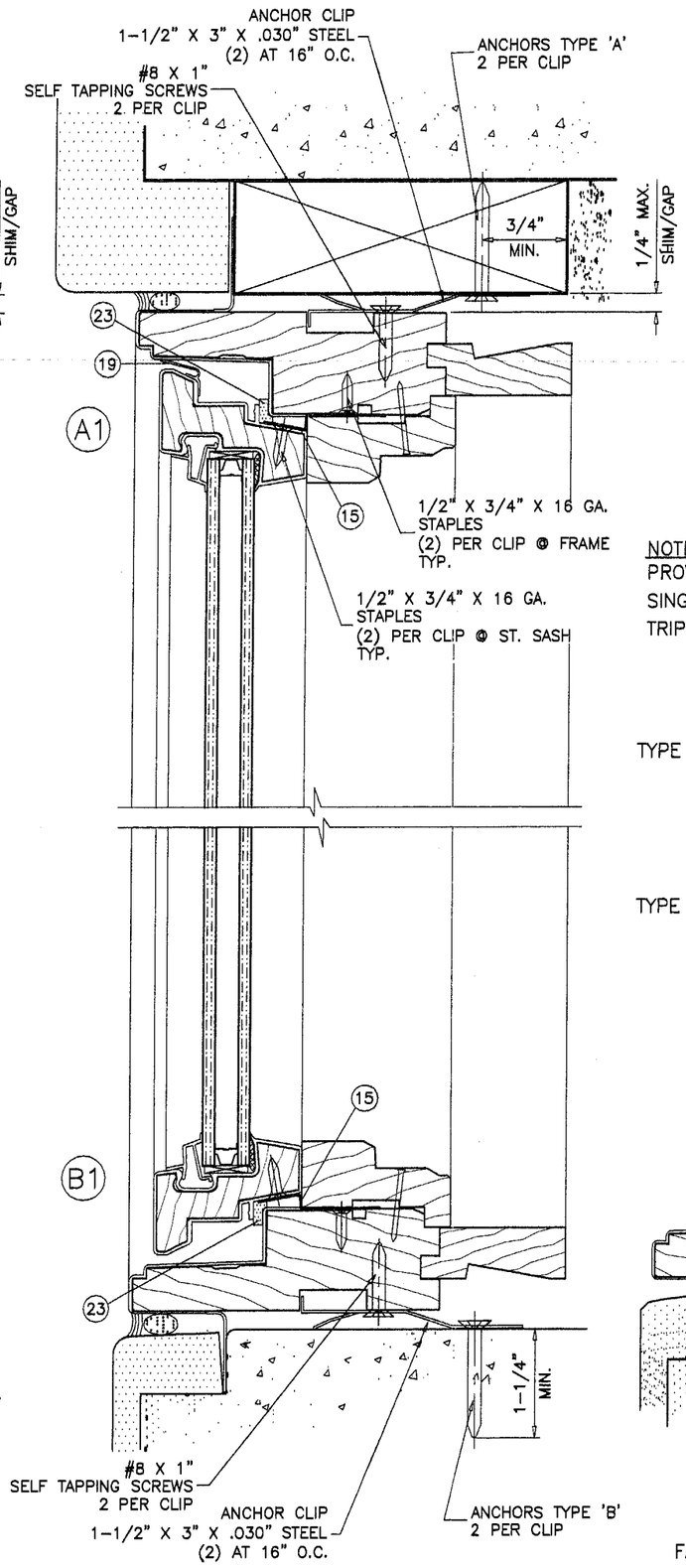

WOOD BUCKS NOT BY ANDERSEN, MUST SUSTAIN LOADS IMPOSED BY GLAZING SYSTEM AND TRANSFER THEM TO THE BUILDING STRUCTURE.

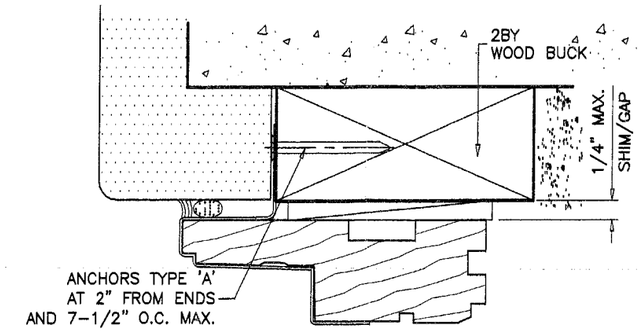

ALT. INSTALLATION
FASTENER THRU FLANGE

NOTE:
PROVIDE ANCHOR CLIPS AT HEAD & SILL AS FOLLOWS
SINGLE AND DOUBLE UNITS: (1) AT CENTER OF EACH SASH
TRIPLE UNITS: (1) AT CENTER OF END SASH
(2) AT MIDDLE SASH SEE ELEV.

ANCHOR OPTIONS:

TYPE 'A'– #8 SMS
INTO 2BY WOOD BUCKS OR WOOD STRUCTURE
1-1/2" MIN. PENETRATION INTO WOOD
ROOFING NAILS, 11GA. X 1-3/4" LONG
INTO 2BY WOOD BUCKS OR WOOD STRUCTURE

TYPE 'B'– 3/16" ø TAPCONS (BY ELCO) OR
EQUIVALENT CONCRETE ANCHOR
THRU 1BY WOOD BUCKS INTO MASONRY OR DIRECTLY INTO MASONRY
1-1/4" MIN. MASONRY EMBED.

LOCKING OPTIONS:

SURFACE MOUNTED LOCK WITH KEEPERS ON SASH BY AMEROCK CORP.
(1) POINT LOCK FOR WINDOWS UPTO 28-3/8" HEIGHTS.
(2) POINT LOCK FOR ALL BIGGER HEIGHTS.

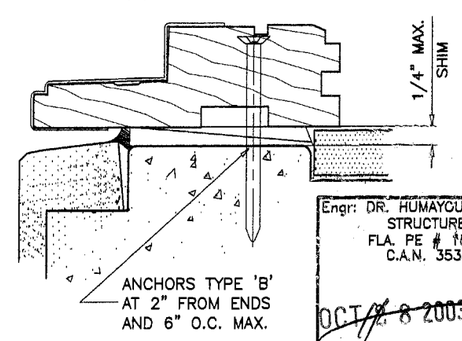

ALT. INSTALLATION
FASTENER THRU FRAME

PRODUCT REVISED
as complying with the Florida Building Code
Acceptance No. 03-1110.01
Expiration Date June 22, 2008
By Manuel Perez
Miami-Dade Product Control Division

Engr: DR. HUMAYOUN FAROOQ
STRUCTURES
FLA. PE # 18557
C.A.N. 3538
OCT 08 2003

AL-FAROOQ CORPORATION
ENGINEERS, PLANNERS & PRODUCT DESIGN
1235 SW 87 AVE
MIAMI, FLORIDA 33174
TEL. (305) 264-8100 FAX. (305) 262-6978
COMP-ANL\W03-72AC

'PERMA-SHIELD' VINYL CLAD WD. CASEMENT WDW.

ANDERSEN CORPORATION
100 FOURTH AVE. NORTH
BAYPORT, MN. 55003-1096
TEL. (800) 426-7691 FAX (-)

revisions:			
no	date	by	description

date: 08-22-03
scale: 1/2" = 1"
dr. by: HAMID
chk. by:

drawing no.
W03-72

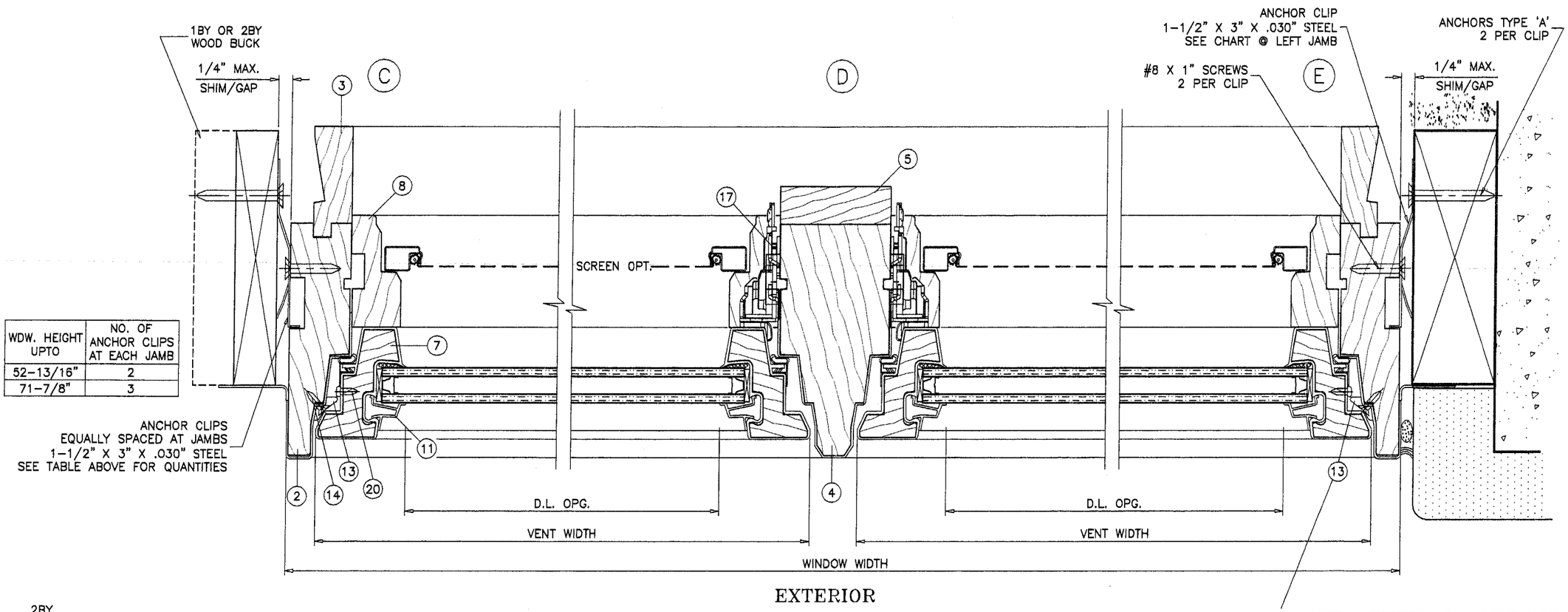

EXTERIOR

WDW. HEIGHT UPTO	NO. OF ANCHOR CLIPS AT EACH JAMB
52-13/16"	2
71-7/8"	3

SASH SIZES	NO. OF SNUGGER BRACKETS AT HINGE JAMB
SIZES UPTO 23" X 51-1/4"	1 AT MIDSPAN
ALL OTHER SIZES	2 AT 20" FROM TOP & BOTTOM

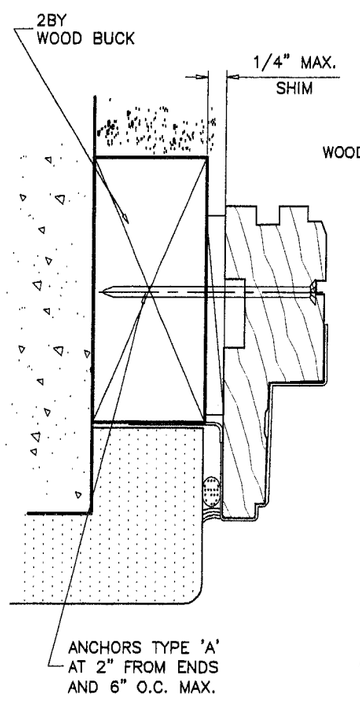

ALT. INSTALLATION
FASTENER THRU FRAME

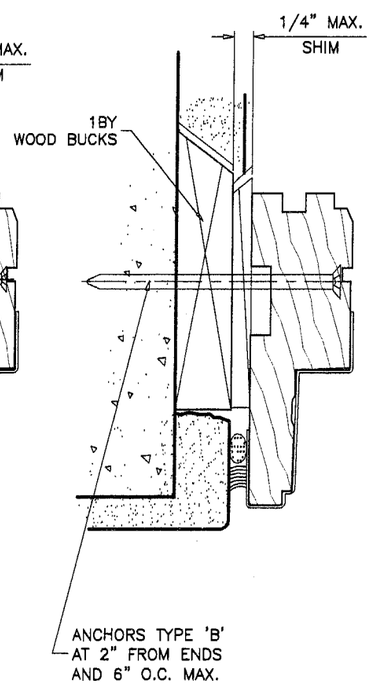

ALT. INSTALLATION
FASTENER THRU FRAME

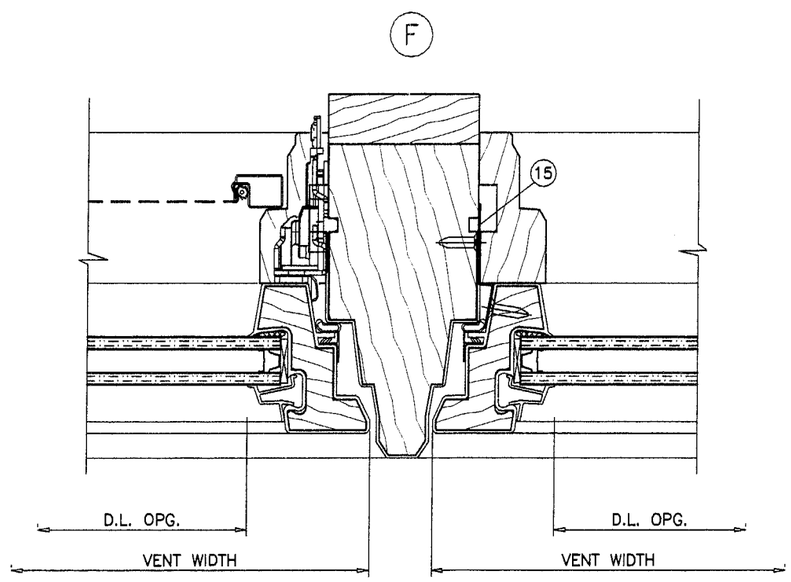

PRODUCT REVISED
as complying with the Florida Building Code
Acceptance No. 03-1110.01
Expiration Date June 22, 2008
By Manuel Perez
Miami Dade Product Control Division

Engr: DR. HUMAYOUN FAROOQ
STRUCTURES
FLA. PE # 13557
C.A.N. 3538
OCT 28 2003

AL-FAROOQ CORPORATION
ENGINEERS, PLANNERS & PRODUCT DESIGN
1235 SW 87 AVE
MIAMI, FLORIDA 33174
TEL (305) 264-8100 FAX. (305) 262-6978

COMP-ANL\W03-72AC

'PERMA-SHIELD' VINYL CLAD WD. CASEMENT WDW.

ANDERSEN CORPORATION
100 FOURTH AVE. NORTH
BAYPORT, MN. 55003-1096
TEL. (800) 426-7691 FAX (-)

revisions:			
no	date	by	description

date: 08-22-03
scale: 1/2" = 1"
dr. by: HAMID
chk. by:

drawing no.
W03-72

sheet 4 of 5

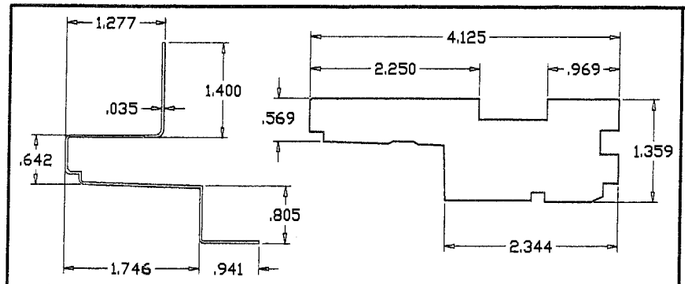

VINYL CLADDING FRAME HEAD/SILL

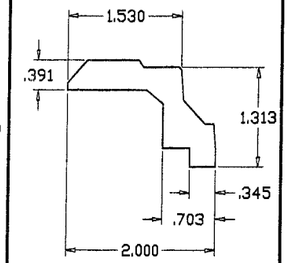

VENT STOP SILL

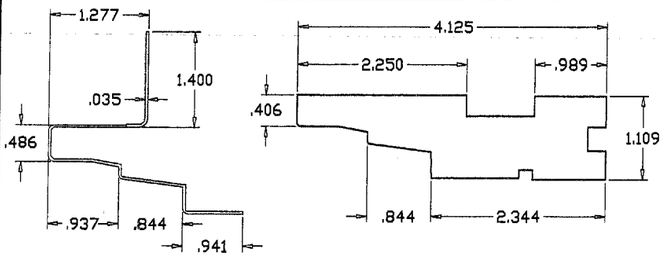

VINYL CLADDING FRAME JAMB

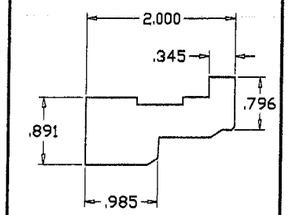

VENT STOP HEAD

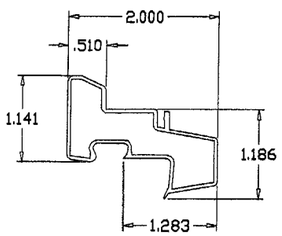

VINYL CLADDING

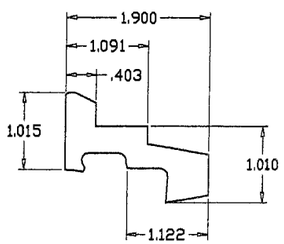

VENT RAIL/STILE

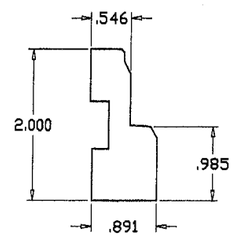

VENT STOP JAMB

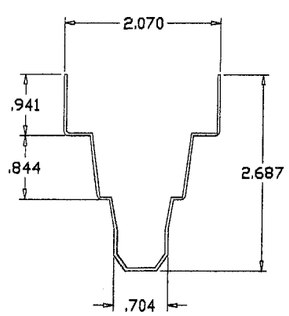

VINYL CLADDING

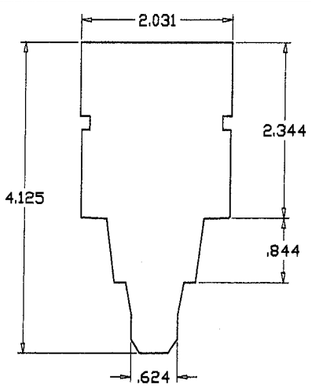

CENTER POST

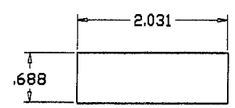

CENTER POST CASING

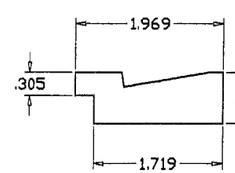

EXTENSION JAMB (HEAD/JAMB/SILL)

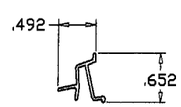

GLAZING BEAD

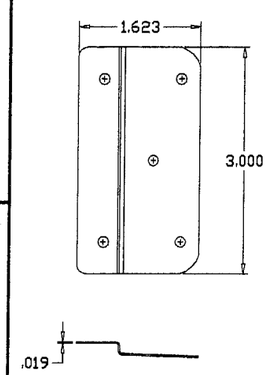

STATIONARY SASH CLIP

ITEM #	NUMBER	QUANTITY	DESCRIPTION	MATERIAL	MANF./SUPPLIER/REMARKS
1	30835	AS REQD.	FRAME HEAD/SILL	WOOD	ANDERSEN
2	30838	AS REQD.	FRAME JAMB	WOOD	ANDERSEN
3	–	OPTIONAL	EXTENSION JAMBS	WOOD	ANDERSEN
4	30839	1	POST MULLION	WOOD	ANDERSEN
5	30056	1	CASING MULLION	–	–
6	–	–	–	–	–
7	30013	4/ SASH	SASH RAIL/STILE	WOOD	ANDERSEN
8	–	2/ WDW.	VENT STOP JAMB	WOOD	ANDERSEN
9	30846/48	1/ WDW.	VENT STOP HEAD	WOOD	ANDERSEN
10	30843/45	1/ WDW.	VENT STOP SILL	WOOD	ANDERSEN
11	30184	AS REQD.	GLAZING BEAD	PVC	–
12	30810/12	1/ SASH	ROTO OPERATOR	STEEL	AMEROCK CORP.
13	30241	AS REQD.	SNUGGER BRACKET	POLYCARBONATE	SEE SHEET 4 FOR QUANTITIES
14	#8 X 1/2"	AS REQD.	SNUGGER SCREWS	–	–
15	30053	–	STATIONARY SASH CLIP	GALV. STEEL	–
16	1361409	2/ SASH	HINGE ASEMBLY AT TOP & BOTTOM OF SASH	STEEL	AMEROCK CORP.
17	–	AS REQD.	LOCK W/ KEEPERS ON SASH	STEEL	AMEROCK CORP.
18	30213	AS REQD.	WEATHERSTRIP STILE	–	–
19	30021	AS REQD.	WATERBAR WEATHERSTRIP	–	–
20	30240	AS REQD.	SNUGGER PIN	–	–
21	–	–	–	–	–
22	–	AS REQD.	BRAD NAILS 1–1/2" LONG	GALV. STEEL	–
23	30172	–	FOAM WEATHERSTRIPPING	–	–

ALL WOOD TO BE PONDEROSA PINE OR EQUAL

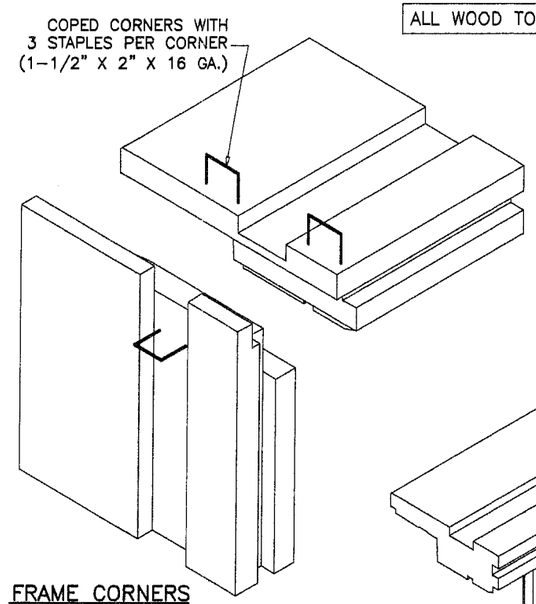

FRAME CORNERS

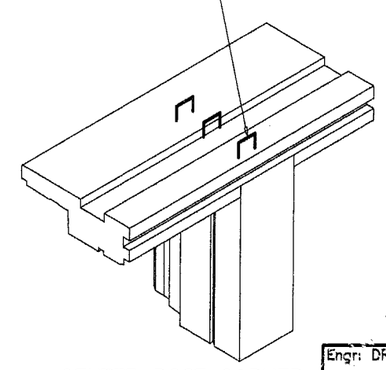

CENTER POST CORNER

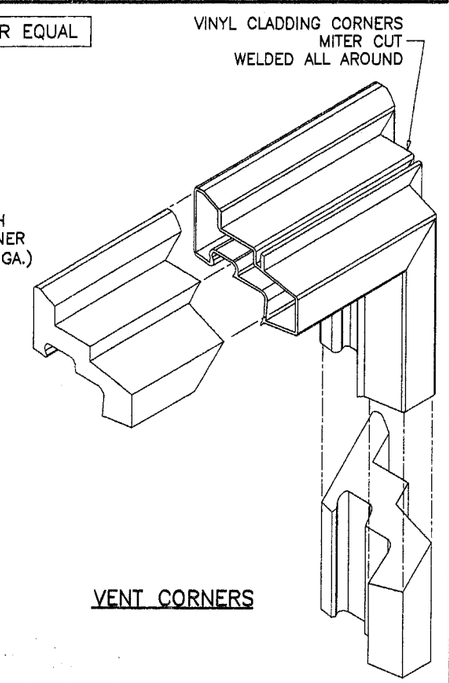

VENT CORNERS

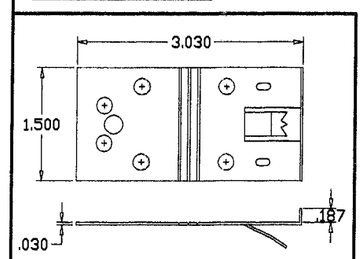

ANCHOR CLIP

Engr: DR. HUMAYOUN FAROOQ
STRUCTURES
FLA. PE # 16557
C.A.N. 3538

OCT 2 8 2003

PRODUCT REVISED
as complying with the Florida Building Code
Acceptance No. 03-1110.01
Expiration Date June 22, 2008
By Miami Dade Product Control Division

AL-FAROOQ CORPORATION
ENGINEERS, PLANNERS & PRODUCT DESIGN
1235 SW 87 AVE
MIAMI, FLORIDA 33174
TEL. (305) 264-8100 FAX. (305) 262-6978
COMP-ANL\W03-72AC

'PERMA-SHIELD' VINYL CLAD WD. CASEMENT WDW.

ANDERSEN CORPORATION
100 FOURTH AVE. NORTH
BAYPORT, MN. 55003-1096
TEL. (800) 426-7691 FAX (-)

revisions:

no	date	by	description

date: 08-22-03
scale: 1/2" = 1"
dr. by: HAMID
chk. by:

drawing no. W03-72

sheet 5 of 5