MIAMI-DADE

BUILDING CODE COMPLIANCE OFFICE (BCCO)
PRODUCT CONTROL DIVISION

MIAMI-DADE COUNTY, FLORIDA
METRO-DADE FLAGLER BUILDING
140 WEST FLAGLER STREET, SUITE 1603
MIAMI, FLORIDA 33130-1563
(305) 375-2901 FAX (305) 375-2908

NOTICE OF ACCEPTANCE (NOA)

Ceco Building Systems
2400 Highway 45 N
Columbus, MS 39705

SCOPE:
This NOA is being issued under the applicable rules and regulations governing the use of construction materials. The documentation submitted has been reviewed by Miami-Dade County Product Control Division and accepted by the Board of Rules and Appeals (BORA) to be used in Miami Dade County and other areas where allowed by the Authority Having Jurisdiction (AHJ).

This NOA shall not be valid after the expiration date stated below. The Miami-Dade County Product Control Division (In Miami Dade County) and/or the AHJ (in areas other than Miami Dade County) reserve the right to have this product or material tested for quality assurance purposes. If this product or material fails to perform in the accepted manner, the manufacturer will incur the expense of such testing and the AHJ may immediately revoke, modify, or suspend the use of such product or material within their jurisdiction. BORA reserves the right to revoke this acceptance, if it is determined by Miami-Dade County Product Control Division that this product or material fails to meet the requirements of the applicable building code.

This product is approved as described herein, and has been designed to comply with the High Velocity Hurricane Zone of the Florida Building Code.

DESCRIPTION: 0.025" (min.) Galvalume Steel Wall Panel

APPROVAL DOCUMENT: Drawing No. FLMAPWALL01, titled " MAP Wall Panel ", sheets 1 and 2 of 2, prepared by Ceco Building Systems, dated May 05, 2004, signed and sealed by Gerald L. Hatch, P.E., bearing the Miami-Dade County Product Control Approval stamp with the Notice of Acceptance number and approval date by the Miami-Dade County Product Control Division.

MISSILE IMPACT RATING: Large and Small Missile Impact

LABELING: Each panel shall bear a permanent label with the manufacturer's name or logo, city, state and the following statement: "Miami-Dade County Product Control Approved", unless otherwise noted herein.

RENEWAL of this NOA shall be considered after a renewal application has been filed and there has been no change in the applicable building code negatively affecting the performance of this product.

TERMINATION of this NOA will occur after the expiration date or if there has been a revision or change in the materials, use, and/or manufacture of the product or process. Misuse of this NOA as an endorsement of any product, for sales, advertising or any other purposes shall automatically terminate this NOA. Failure to comply with any section of this NOA shall be cause for termination and removal of NOA.

ADVERTISEMENT: The NOA number preceded by the words Miami-Dade County, Florida, and followed by the expiration date may be displayed in advertising literature. If any portion of the NOA is displayed, then it shall be done in its entirety.

INSPECTION: A copy of this entire NOA shall be provided to the user by the manufacturer or its distributors and shall be available for inspection at the job site at the request of the Building Official.

This NOA consists of this page 1, evidence submitted page(s) as well as approval document mentioned above. The submitted documentation was reviewed by **Helmy A. Makar, P.E.**

Helmy A. Makar
07/15/2004

PRODUCT CONTROL ACCEPTED

NOA No 04-0122.20
Expiration Date: 07/15/2009
Approval Date: 07/15/2004

Ceco Building Systems

NOTICE OF ACCEPTANCE: EVIDENCE SUBMITTED

A. DRAWINGS

1. *Drawing No. FLMAPWALL01, titled " MAP Wall Panel ", sheets 1 and 2 of 2, prepared by Ceco Building Systems, dated May 05, 2004, signed and sealed by Gerald L. Hatch, P.E.*

B. TESTS

1. *Test report # 0341-0925-03, by Hurricane Test Laboratory, Inc., dated November 24, 2003, per Florida Building Code TAS 201, TAS 202, & TAS 203, signed and sealed by Vinu J. Abraham, P.E.*

C. CALCULATIONS

1. *MAP wall panel load capacity calculations, 2 pages, dated December 29, 2003, by Duane S. Ellifritt, P.E., signed and sealed by Duane S. Ellifritt, P.E.*
2. *MAP wall panel load capacity calculations, 22 pages, dated December 23, 2003, by Gerald L. Hatch, P.E., signed and sealed by Gerald L. Hatch, P.E.*

D. QUALITY ASSURANCE

1. *By Miami-Dade County Building Code Compliance Office.*

E. MATERIAL CERTIFICATIONS

1. *Mill Certificate from United States Steel Corporation, dated September 04, 2003, with the Chemical and Structural properties of galvalume steel.*
2. *Tensile test report # 4AM-79, dated February 5, 2004, by QC Metallurgical, Inc., signed and sealed by Frank Grate, P.E.*

Helmy A. Makar, P. E.
Product Control Examiner
NOA No 04-0122.20
Expiration Date: 07/15/2009
Approval Date: 07/15/2004

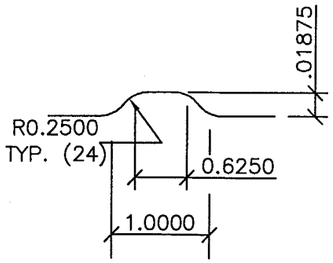

TYPICAL MINOR

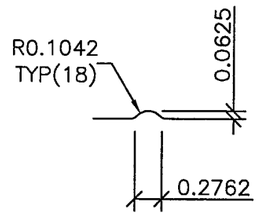

TYPICAL BEAD

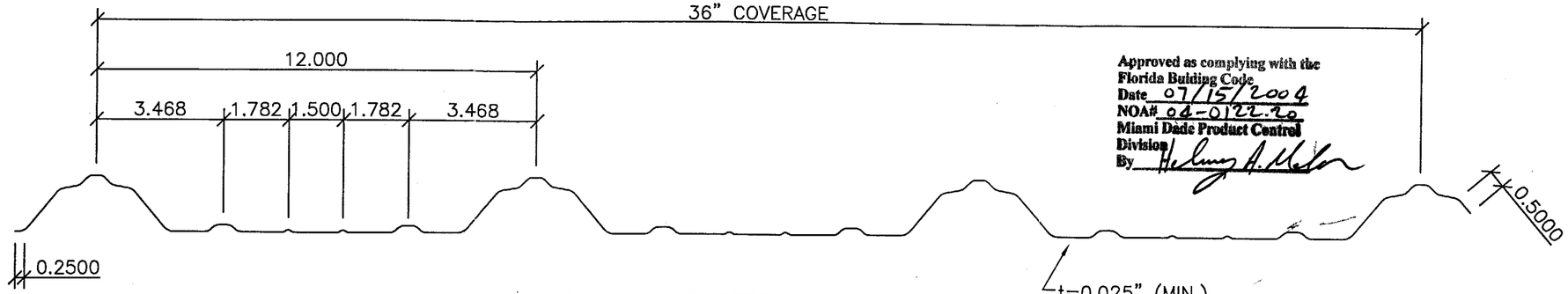

Approved as complying with the Florida Building Code
Date 07/15/2004
NOA# 04-0122.20
Miami Dade Product Control Division
By Helmy A. Melon

GALVALUME STEEL WALL PANEL

ASTM A-792 GRADE 50 STEEL AZ50 PAINTED

BASE METAL ---	0.0222
AZ50 COATING -	0.0016
PAINT --------	0.0015
	0.0253

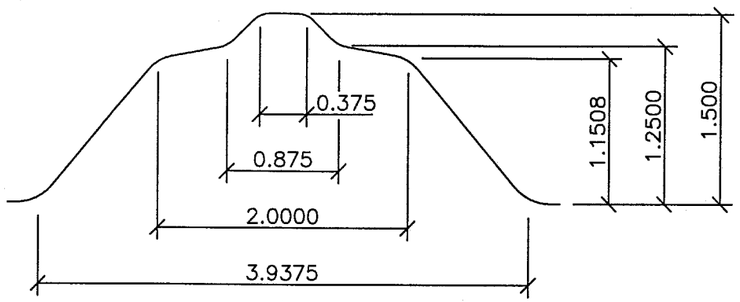

TYPICAL RIB

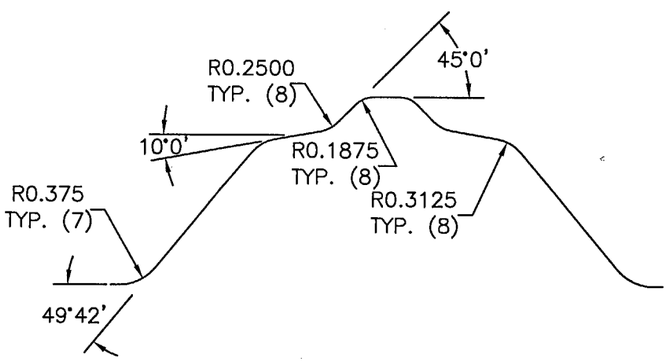

NOTES:

A.) This "MAP" Structural Wall Panel shown on this Product Approval Document has been designed in accordance with the 2001 Edition of the Florida Building Code. Design wind loads shall be determined as per section 1619 of the above mentioned code, for a basic wind speed of 146 m.p.h., and in accordance w/ ASCE 7-98 standard.

B.) All steel sheet metal Wall Panels shall be 24 gauge (0.025" min.) and conforms to structural quality ASTM A-792, Grade 50, AZ50, painted, Fy=50ksi minimum.

C.) All screws to be Hex-Washer-Head, Self Drilling, Carbon Steel with 0.0005" minimum thickness zinc platting as manufactured by Atlas.

D.) Installation of this Wall Panel shall be based on this Product Approval Document with NO deviation from the conditions detailed on this document.

E.) Installation of this Wall Panel shall be onto girts with 16 gauge (0.056 min. painted thickness) with fasteners as shown on this Product Approval Document.

F.) This Product Approval Document will be considered invalid if modified.

G.) Site specific projects shall be prepared by a Florida Registered Engineer or Architect which will become the professional of record (P.O.R.) for the project and who will be responsible for the proper use of this Product Approval Document.

H.) The "MAP" Structural Wall Panel manufacturer's permanent label shall be placed at bottom of each panel. The label shall be one of the following:

Ceco Building Systems Columbus, MS Miami-Dade County Product Control Approved.	Ceco Building Systems Mount Pleasant, IA Miami-Dade County Product Control Approved.	Ceco Building Systems Rocky Mount, NC Miami-Dade County Product Control Approved.

J.) This 24 gauge (0.025" min.) "MAP" Wall Panel shall be used for wall construction only. Every "MAP" Wall Panel project shall be constructed using the same details shown on this drawing including:

1. Details of all panel material characteristics and sections with dimensions and thickness.
2. Assembly details including all connections and fastener diagram with size and location.
3. Panel maximum design pressure for the wall field and end zones shall be equal to or less than the lowest pressure obtained from the panel allowables shown below.

K.) The maximum positive / negative design pressure for this 24 gauge (0.025" min.) "MAP" Wall Panel in the wall's field and end zones shall be the lowest pressure calculated based on the following panel allowable:

1. Maximum allowable bending moment of panel at supports =117.50 ft.-lbs.
2. Maximum allowable bending moment of panel between supports =94.00 ft.-lbs.
3. EI value of panel =1,400,976 lbs-in^2/ft.
4. Maximum allowable deflection of the wall panel =L/240.
5. Maximum support reaction =258.50 lbs.

Maximum allowable "MAP" Wall Panel's Span =5.00ft. "MAP" Wall Panel has to be supported over three spans or more.

6-18-04

REVISIONS	BY	DATE

NOTES:
THIS DRAWING IS NOT TO SCALE.
MAP PANEL MANUFACTURED WITH TOOLING FROM "A.S.C. MACHINE TOOLS, INC." SPOKANE, WASHINGTON MARCH 30, 1995.

DRAWN BY	DATE
CHECKED BY	DATE
APPROVED BY	DATE

Ceco Building Systems
A Robertson Ceco Company

MAP WALL PANEL PROFILE

DRAWING NUMBER FLMAPWALL01

DATE: 05/05/04

SHEET NO. 1 OF 2

MAP WALL PANEL

NOTE:
1. INSULATION NOT SHOWN FOR CLARITY.
2. LOCATE FASTENERS IN FLAT 1/2" AWAY FROM EACH RIB ON EACH SIDE OF RIB AND ONE AT CENTER BETWEEN RIBS.

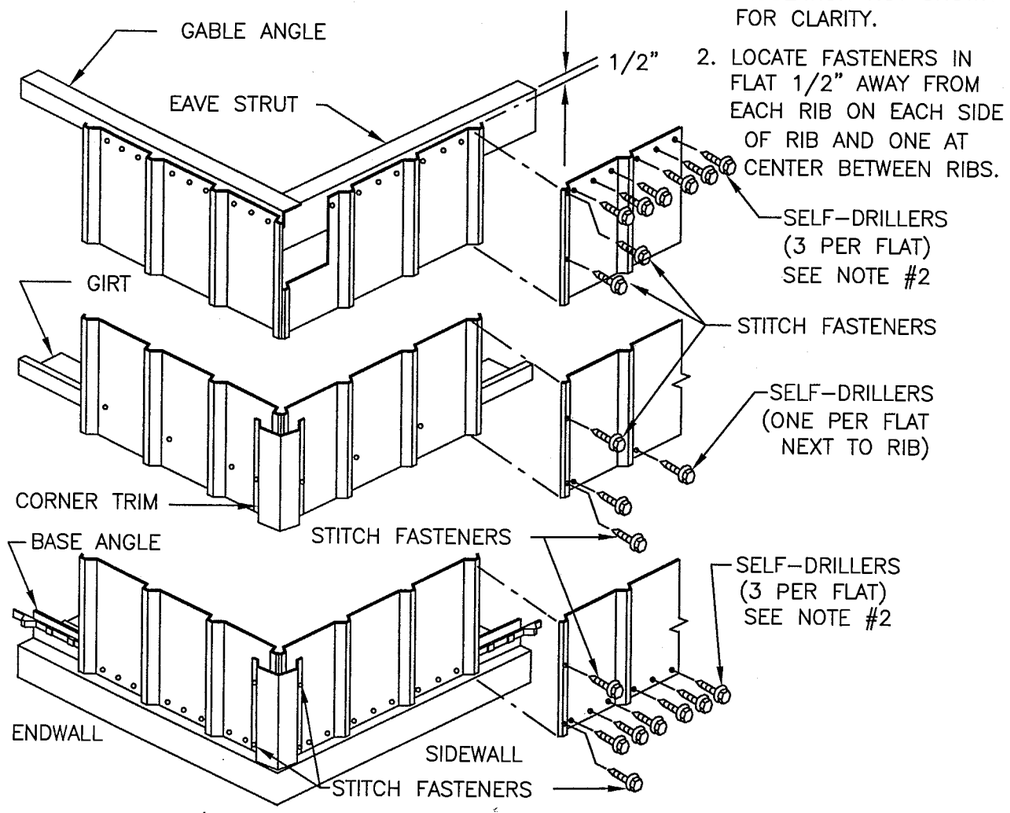

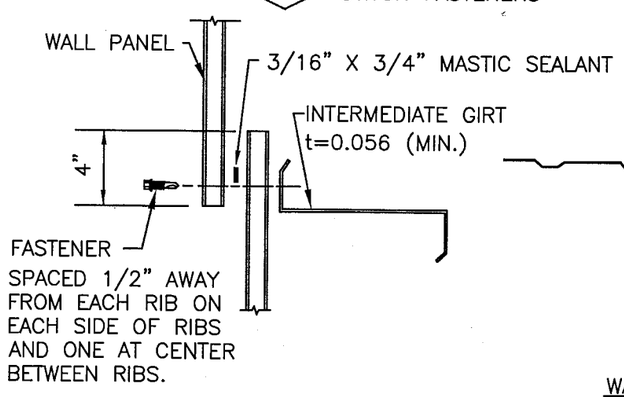

WALL PANEL ENDLAP (IF REQ'D) AT GIRT LOCATION

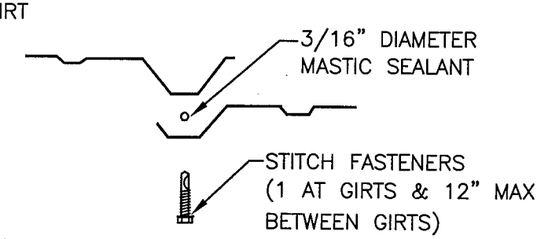

WALL PANEL SIDELAP AND CORNER TRIM FLASHING

SCREWS FASTENERS

WALL SCREWS

STANDARD (NO OPTION)

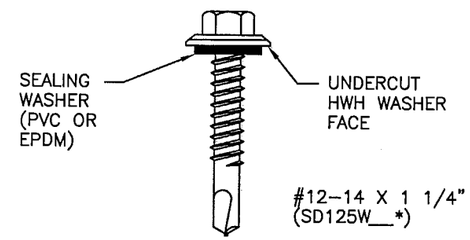

STRUCTURAL FASTENER
(SELF-DRILLING SCREWS)

STANDARD (NO OPTION)

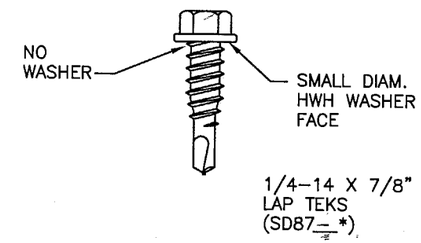

STITCH FASTENER
(SELF-DRILLING SCREWS)

* ADD LETTER DESIGNATION TO INDICATE COLOR (SEE CHART BELOW). ADD "G" IF NO COLOR (GALV.). EXAMPLE: SD125WG OR SD87G

COLOR CHART

CECO STANDARD PAINT		CECO PREMIUM PAINT	
F = ASH GRAY	P = GLACIER WHITE	A = COLONIAL RED	R = ALMOND
I = LIGHTSTONE	Q = EMERALD GREEN	C = NATURAL PATINA	V = CLASSIC GREEN
M = MIDNIGHT BLUE	T = BURNISHED SLATE	H = SLATE GRAY	W = MEDIUM BRONZE
O = SAND GOLD	Y = SURREY TAN	L = SNOW WHITE	Z = PACIFIC BLUE

STRUCTURAL AND STITCH SELF-DRILLING WALL SCREWS ARE CARBON STEEL WITH 0.0005 MINIMUM THICKNESS ZINC PLATING, PLUS POLYMER COATING FOR LONG TERM CORROSION RESISTANCE; THEY ARE ALSO PAINTED TO MATCH PANEL AND TRIM COLORS. SCREWS HAVE 5/16" HEX-WASHER-HEAD (HWH).

Approved as complying with the Florida Building Code
Date 07/15/2004
NOA# 04-122.20
Miami Dade Product Control Division
By

6-18-04

	REVISIONS	BY	DATE
N			
N			
N			
N			

NOTES:
THIS DRAWING IS NOT TO SCALE.
MAP PANEL MANUFACTURED WITH TOOLING FROM "A.S.C. MACHINE TOOLS, INC." SPOKANE, WASHINGTON MARCH 30, 1995.

DRAWN BY	DATE
CHECKED BY	DATE
APPROVED BY	DATE

Ceco Building Systems
A Robertson Ceco Company

MAP WALL PANEL INSTALLATION DETAILS	DATE: 05/05/04
DRAWING NUMBER FLMAPWALL01	SHEET NO. 2 OF 2