MIAMI-DADE COUNTY
BUILDING CODE COMPLIANCE OFFICE (BCCO)
PRODUCT CONTROL DIVISION

MIAMI-DADE COUNTY, FLORIDA
METRO-DADE FLAGLER BUILDING
140 WEST FLAGLER STREET, SUITE 1603
MIAMI, FLORIDA 33130-1563
(305) 375-2901 FAX (305) 375-2908

NOTICE OF ACCEPTANCE (NOA)

Kawneer Company, Inc.
500 East 12 Street
Bloomsburg, PA 17815

SCOPE:
This NOA is being issued under the applicable rules and regulations governing the use of construction materials. The documentation submitted has been reviewed by Miami-Dade County Product Control Division and accepted by the Board of Rules and Appeals (BORA) to be used in Miami Dade County and other areas where allowed by the Authority Having Jurisdiction (AHJ).

This NOA shall not be valid after the expiration date stated below. The Miami-Dade County Product Control Division (In Miami Dade County) and/or the AHJ (in areas other than Miami Dade County) reserve the right to have this product or material tested for quality assurance purposes. If this product or material fails to perform in the accepted manner, the manufacturer will incur the expense of such testing and the AHJ may immediately revoke, modify, or suspend the use of such product or material within their jurisdiction. BORA reserves the right to revoke this acceptance, if it is determined by Miami-Dade County Product Control Division that this product or material fails to meet the requirements of the applicable building code.

This product is approved as described herein, and has been designed to comply with the Florida Building Code, including the High Velocity Hurricane Zone.

DESCRIPTION: Series 350 Medium Stile Outswing Aluminum Storefront Door w/IR 500 Framing System

APPROVAL DOCUMENT: Drawing No. **NOA200-001**, Sheets 1 thru 10 of 10, titled "Product Approval Drawings, Kawneer 350 Doors – Impact, Multiple Infills, Protocols PA 201/202/203", dated 12/4/00, with revision #4 dated 7/13/04, prepared by manufacturer, signed by sealed by Ballard Argus, P.E., bearing the Miami-Dade County Product Control Renewal stamp with the Notice of Acceptance number and expiration date by the Miami-Dade County Product Control Division.

MISSILE IMPACT RATING: Large and Small Missile Impact

LABELING: Each unit shall bear a permanent label with the manufacturer's name or logo, city, state and following statement: "Miami-Dade County Product Control Approved", unless otherwise noted herein.

RENEWAL of this NOA shall be considered after a renewal application has been filed and there has been no change in the applicable building code negatively affecting the performance of this product.

TERMINATION of this NOA will occur after the expiration date or if there has been a revision or change in the materials, use, and/or manufacture of the product or process. Misuse of this NOA as an endorsement of any product, for sales, advertising or any other purposes shall automatically terminate this NOA. Failure to comply with any section of this NOA shall be cause for termination and removal of NOA.

ADVERTISEMENT: The NOA number preceded by the words Miami-Dade County, Florida, and followed by the expiration date may be displayed in advertising literature. If any portion of the NOA is displayed, then it shall be done in its entirety.

INSPECTION: A copy of this entire NOA shall be provided to the user by the manufacturer or its distributors and shall be available for inspection at the job site at the request of the Building Official.

This NOA **revises and renews NOA # 01-0418.01** and consists of this page 1 and evidence pages E-1 and E-2, as well as approval document mentioned above.

The submitted documentation was reviewed by **Manuel Perez, P.E.**

PRODUCT CONTROL ACCEPTED

Kawneer Company, Inc.

NOTICE OF ACCEPTANCE: EVIDENCE SUBMITTED

A. DRAWINGS

1. Manufacturer's die drawings and sections.
2. Drawing No. **NOA200-001**, Sheets 1 thru 10 of 10, titled "Product Approval Drawings, Kawneer 350 Doors – Impact, Multiple Infills, Protocols PA 201/202/203", dated 12/4/00, with revision #4 dated 7/13/04, prepared by manufacturer, signed and sealed by Ballard Argus, P.E.

B. TESTS

1. Test reports on 1) Air Infiltration Test, per PA 202-94
   2) Uniform Static Air Pressure Test, Loading per PA 202-94
   3) Forced Entry Test, per SFBC 3603.2 (b) and PA 202-94.
   4) Large Missile Impact Test, SFBC PA 201-94
   5) Cyclic Loading Test, per SFBC PA 203-94

   along with installation diagram of a Kawneer "350" medium stile aluminum out-swinging storefront entrance door with two point lock, prepared by American Test Lab of South Florida No. **ATL-1118.01-99** dated 4/25/00, signed and sealed by William R. Mehner, P.E. and Henry Hattem, P.E.
   "Submitted under NOA# 01-0418.01"

C. CALCULATIONS

1. Anchor calculations, structural analysis and glass calculation, dated 03/17/04, revised on 07/14/04, prepared, signed and sealed by Ballard Argus, P.E.

D. QUALITY ASSURANCE

1. Miami Dade Building Code Compliance Office (BCCO).

E. MATERIAL CERTIFICATIONS

1. Notice of Acceptance No. **96-0904.07** issued to E.I. DuPont DeNemours for "Sentry Glass Series 457 Laminate Glass" dated 04/24/97, expiring on 04/24/00.
2. Notice of Acceptance No. **99-0930.01** issued to Security Impact Glass Holdings L.L.C. for "SAF-GLAS" dated 12/16/99, expiring on 12/16/2002.
3. Notice of Acceptance No. **00-0614.09** issued to Viracon Inc. for "HRG-2 Laminated Glass" dated 11/02/2000, expiring on 10/16/2003.
4. Laboratory compliance letter, issued by American Test Lab of South Florida, dated 04/25/00, signed and sealed by William R. Mehner, P.E. and Henry Hattem, P.E.
   "Submitted under NOA# 01-0418.01"

Manuel Perez, P.E.
Product Control Examiner
NOA No 04-0123.02
Expiration Date: February 02, 2009
Approval Date: September 30, 2004

NOTICE OF ACCEPTANCE: EVIDENCE SUBMITTED

F. STATEMENTS

1. Letter stating that the product has not changed in any shape of form since the issuance of NOA# 01-0418.01, dated 01/20/04, signed by Donnie Hunter.
2. Statement letter of conformance, dated March 19, 2004, signed and sealed by Ballard Argus, P.E.
3. Statement letter of no financial interest, March 19, 2004, signed and sealed by Ballard Argus, P.E.
4. Laboratory compliance letter, issued by American Test Lab of South Florida, dated 04/25/00, signed and sealed by William R. Mehner, P.E. and Henry Hattem, P.E. ***"Submitted under NOA# 01-0418.01"***

G. OTHER

1. Notice of Acceptance No. **01-0418.01** issued to Kawneer Company, Inc. for their Series "350" Medium Stile Outswing Aluminum Storefront Door – Impact w/IR 500 Framing System, approved on 06/14/01 and expiring on 02/01/04.

Manuel Perez, P.E.
Product Control Examiner
NOA No 04-0123.02
Expiration Date: February 02, 2009
Approval Date: September 30, 2004

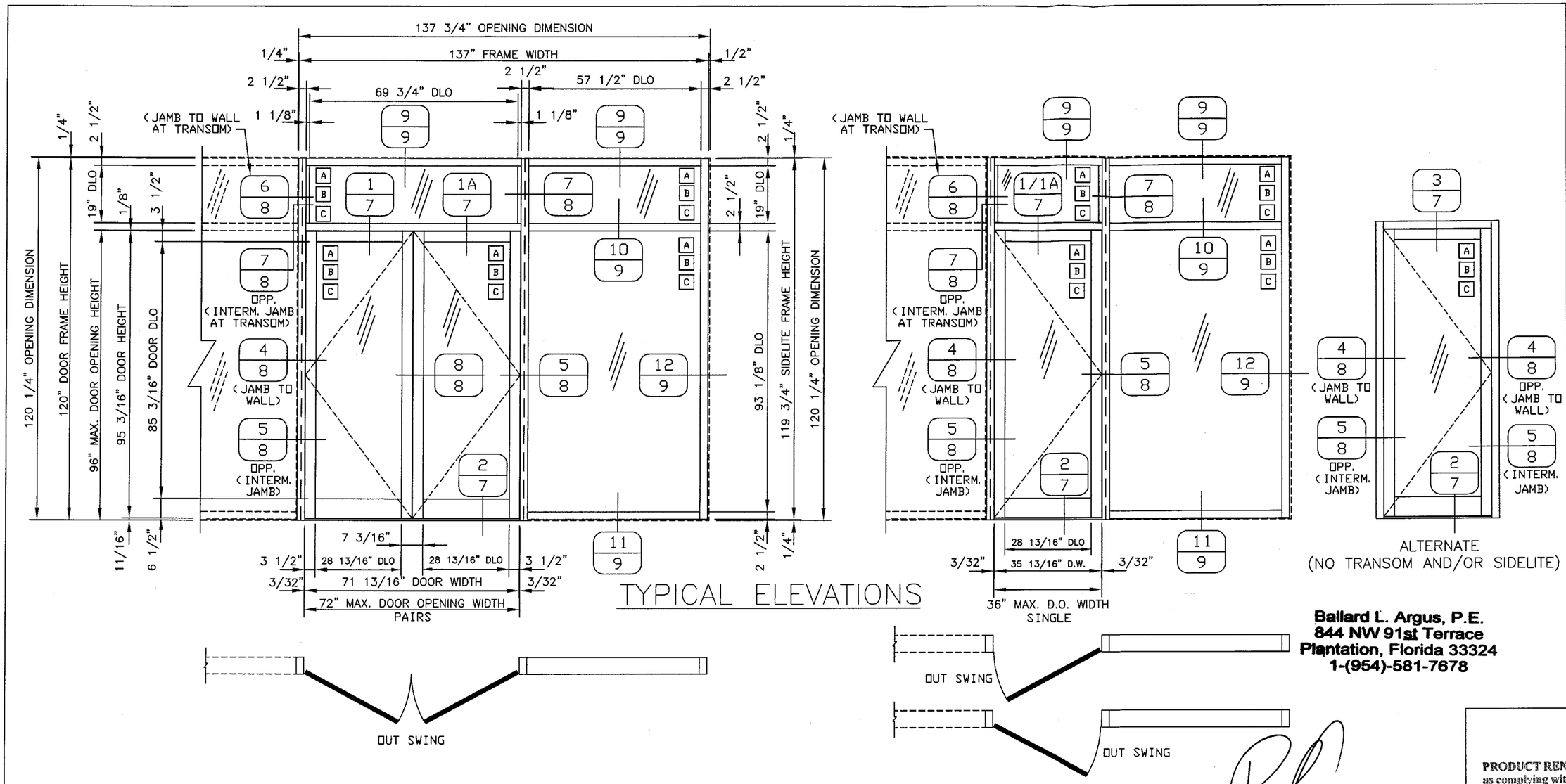

TYPICAL ELEVATIONS

GLAZING SCHEDULE PER ASTM 1300					
GLASS TYPE	MAX. DOOR DLO WIDTH	MAX. DOOR DLO HEIGHT	MAX. FRAME DLO WIDTH	MAX. FRAME DLO HEIGHT	DESIGN PRESSURE
A = 1/4" TEMPERED SentryGlas®	28-13/16"	85-3/16"	57-1/2"	93-1/8"	+/- 81 PSF
	28-13/16"	85-3/16"	35-1/4"	93-1/8"	+/- 85 PSF
B = 9/16" HRG-2 LAMINATED GLASS BY VIRACON 3/16" HEAT STRENGTHENED OUTBOARD LITE/.050 URETHANE/.080 POLYCARBONATE/ .050 URETHANE/3/16" HEAT STRENGTHENED INBOARD LITE	28-13/16"	85-3/16"	57-1/2"	93-1/8"	+/- 85 PSF
	28-13/16"	85-3/16"	41-1/4"	93-1/8"	+/- 85 PSF
C = 7/16" SAF-GLAS LAMINATED GLASS BY SECURITY IMPACT GLASS 3/16" HEAT STRENGTHENED OUTBOARD LITE/.070 POLYCARBONATE/ 3/16" HEAT STRENGTHENED INBOARD LITE	28-13/16"	85-3/16"	57-1/2"	93-1/8"	+/- 57 PSF
	28-13/16"	85-3/16"	41-1/4"	93-1/8"	+/- 85 PSF
TYPICAL DOOR GLASS SIZE = DLO - 1/2"	TYPICAL FRAME GLASS SIZE = DLO + 1-1/4"				

GENERAL NOTES:
SEE SHEET 5 OF 10

Ballard L. Argus, P.E.
844 NW 91st Terrace
Plantation, Florida 33324
1-(954)-581-7678

E.C. NO.	REV.	DATE	DESCRIPTION	BY
-	4	7-13-04	REVISED PER DADE COUNTY	DEH
-	3	3-18-04	REVISED PER DADE COUNTY, REVISED DRAWING NUMBER	DEH
-	2	4-10-01	NO CHANGE	JME
-	1	1-11-01	REVISED PER DADE COUNTY	JME

7/13/04
FA #35626

PRODUCT RENEWED
as complying with the Florida Buiding Code
Acceptance No 04-0123.02
Expiration Date FEB. 2, 2009
By [signature]
Miami Dade Product Control Division

Kawneer
An Alcoa Company
Product Engineering & Development
555 GUTHRIDGE COURT
NORCROSS, GEORGIA 30092
PHONE (770) 449-5555
FAX (770) 734-1560

THIS DRAWING IS FOR DADE COUNTY PRODUCT APPROVAL ONLY

DESCRIPTION
PRODUCT APPROVAL DRAWINGS
KAWNEER 350 DOORS - IMPACT
MULTIPLE INFILLS
PROTOCOLS PA 201/202/203

DRAWN BY JME
DATE 12-4-00
DRWG. NO. NOA200-001
SHEET 1 of 10
NOA200-001-01

PERIMETER FASTENER LOCATIONS

2X PT SOUTHERN PINE WOOD

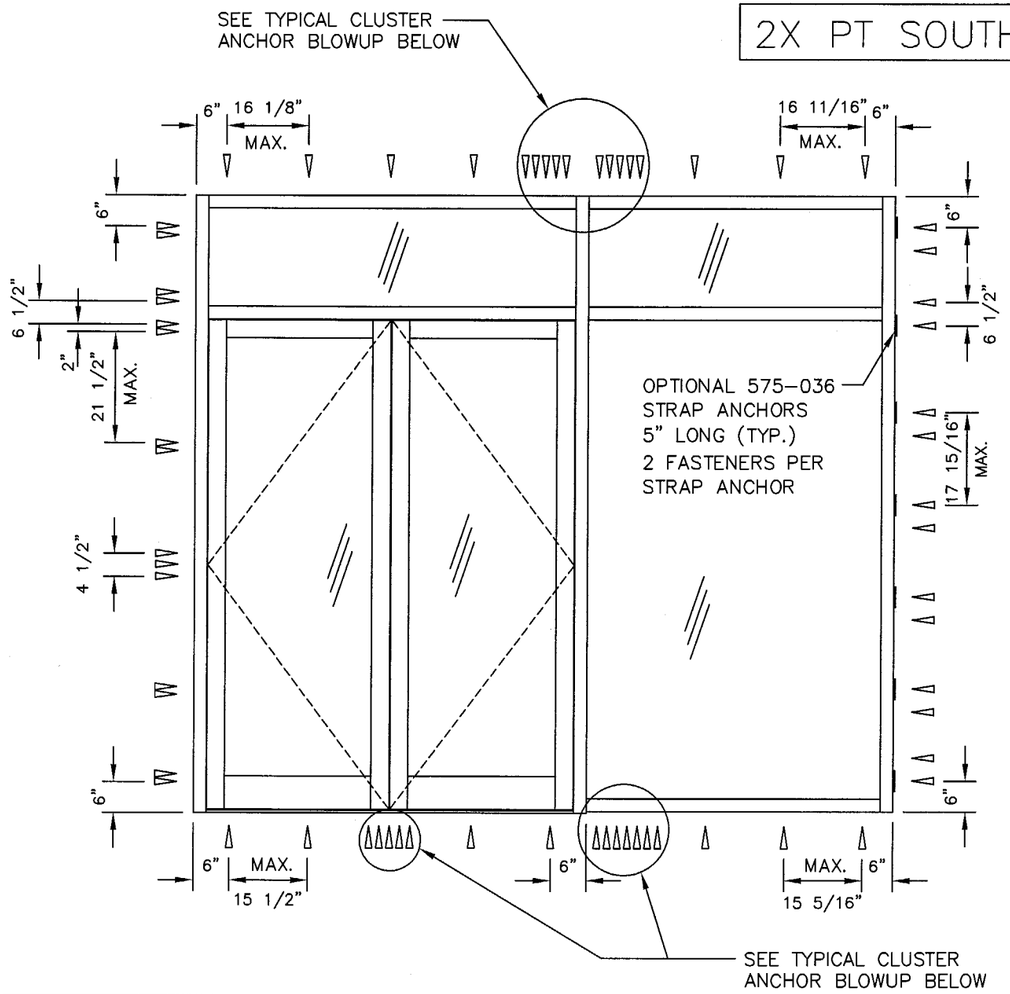

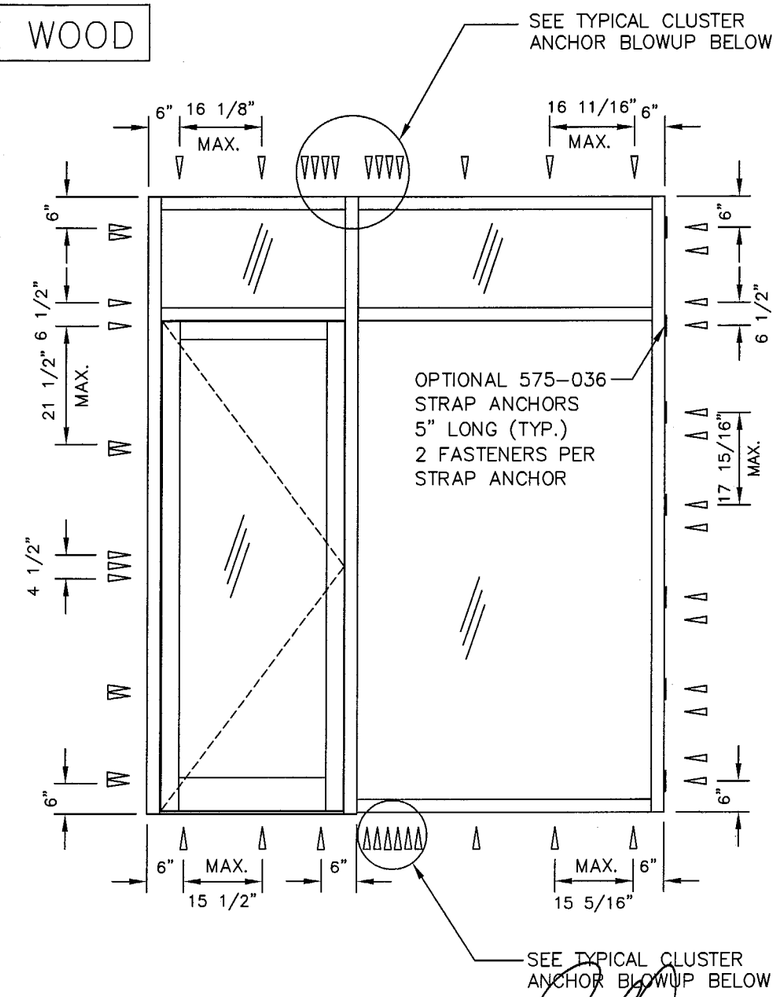

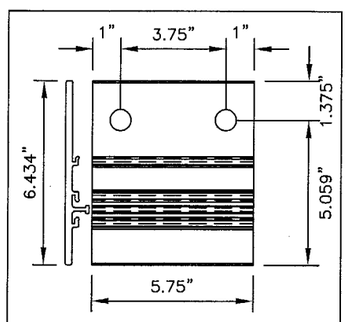

STRAP ANCHOR DETAIL

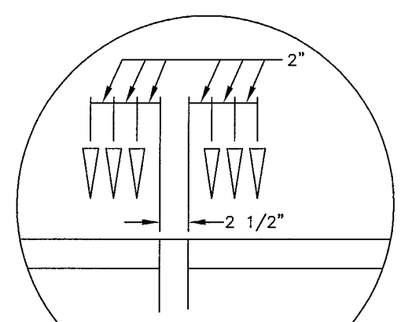

TYPICAL CLUSTER ANCHOR SPACING

FASTENER SCHEDULE

NUMBER	MATERIAL	DESCRIPTION	SUBSTRATE	LOCATION	MIN. EMBED.
-	SAE GRADE 5 STEEL	5/16" DIA. SHEET METAL SCREW	WOOD	575-003 HEAD / SILL 575-001 JAMB W/O 575-036 STRAP ANCHOR	1-1/2"

Ballard L. Argus, P.E.
844 NW 91st Terrace
Plantation, Florida 33324
1-(954)-581-7678

E. C. NO.	REV.	DATE	DESCRIPTION OF REVISION	BY
-	5	7-13-04	REVISED PER DADE COUNTY	DEH
-	4	3-18-04	REVISED PER DADE COUNTY. REVISED DRAWING NUMBER	DEH
-	3	1-30-04	ADD FLAT HEAD FASTENER OPTION	PTT
-	2	4-10-01	NO CHANGE	JME
-	1	1-11-01	REVISED PER DADE COUNTY	JME

PRODUCT RENEWED
as complying with the Florida Building Code
Acceptance No. 04-0123.02
Expiration Date FEB. 2, 2009
By Manuel Perez
Miami Dade Product Control Division

7/13/04
FL #35686

Kawneer
An Alcoa Company
Product Engineering & Development
555 GUTHRIDGE COURT
NORCROSS, GEORGIA 30092
PHONE (770) 449-5555
FAX (770) 734-1560

THIS DRAWING IS FOR DADE COUNTY PRODUCT APPROVAL ONLY

DESCRIPTION	DRAWN BY	DATE
PRODUCT APPROVAL DRAWINGS KAWNEER 350 DOORS - IMPACT MULTIPLE INFILLS PROTOCOLS PA 201/202/203	JME	12-4-00
	DRWG. NO. NOA200-001	
	SHEET 2 of 10	NOA200-001-02

PERIMETER FASTENER LOCATIONS

HEAD/SILL: 3513 PSI CONCRETE
JAMB: HOLLOW CONC. BLOCK

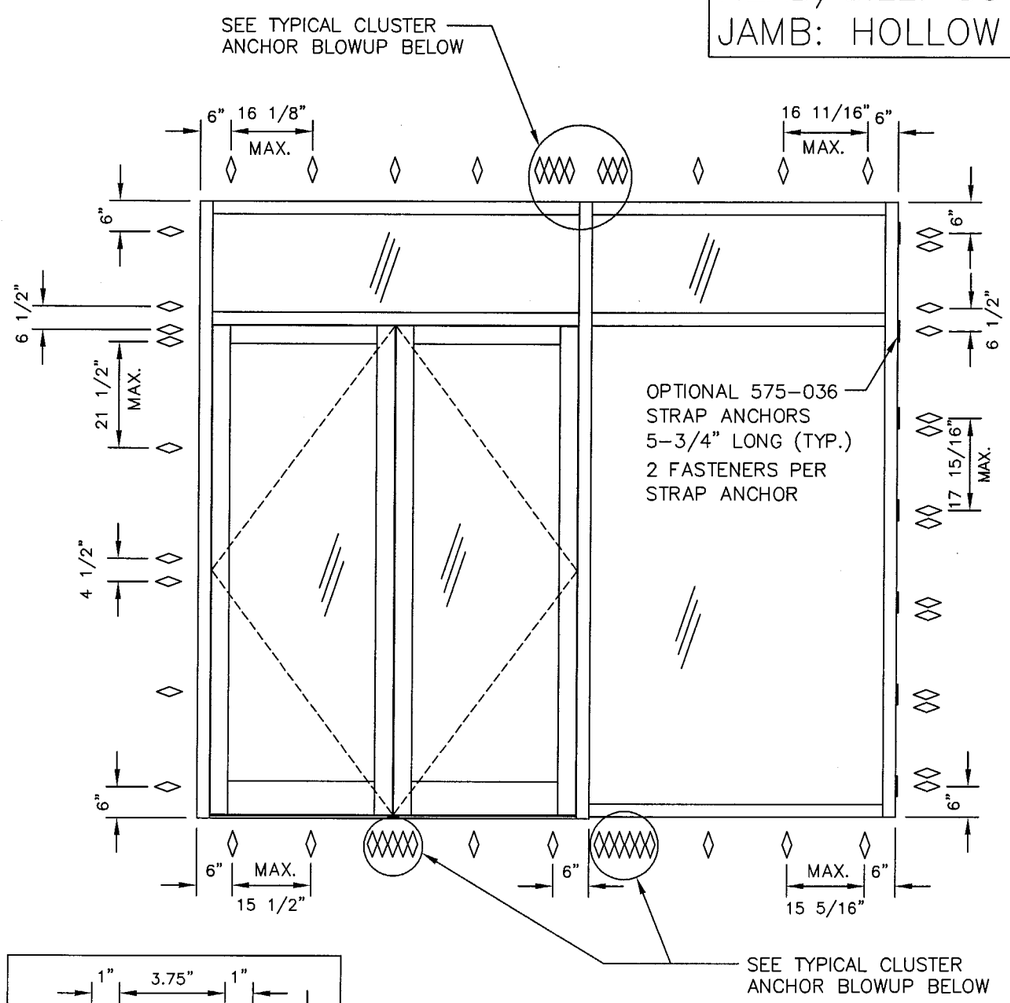

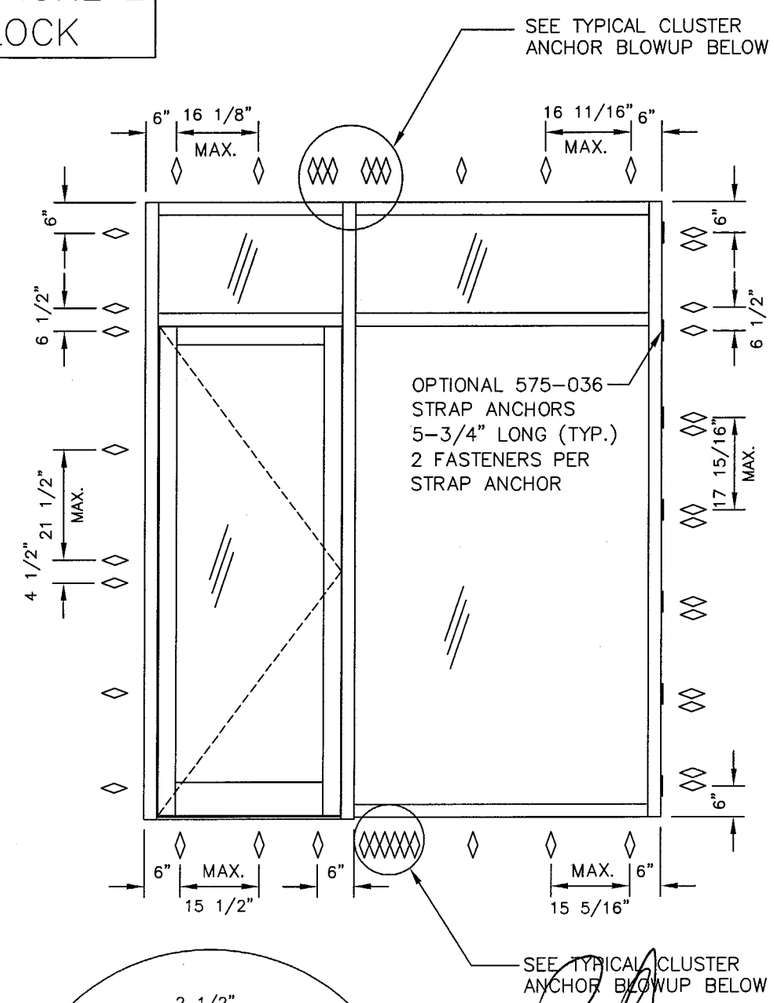

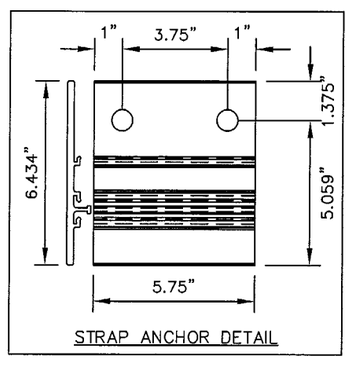

STRAP ANCHOR DETAIL

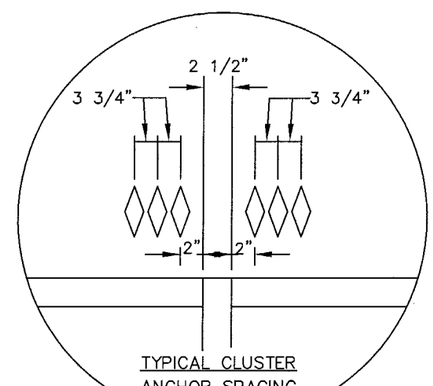

TYPICAL CLUSTER ANCHOR SPACING

FASTENER SCHEDULE

NUMBER	MATERIAL	DESCRIPTION	SUBSTRATE	LOCATION	MIN. EMBED.
◊ -	-	5/16" DIA. HEX OR FLAT HEAD TAPCON BY ELCO	CONCRETE/CBS	575-003 HEAD / SILL	1-3/4"
				575-001 JAMB W/O 575-036 STRAP ANCHOR	1-1/4"

Ballard L. Argus, P.E.
844 NW 91st Terrace
Plantation, Florida 33324
1-(954)-581-7678

E.C. NO.	REV.	DATE	DESCRIPTION OF REVISION	BY
-	5	7-13-04	REVISED PER DADE COUNTY	DEH
-	4	3-18-04	REVISED PER DADE COUNTY, REVISED DRAWING NUMBER	DEH
-	3	1-30-04	ADD FLAT HEAD FASTENER OPTION	PTT
-	2	4-10-01	NO CHANGE	JME
	1	1-11-01	REVISED PER DADE COUNTY	JME

PRODUCT RENEWED
as complying with the Florida Building Code
Acceptance No. 04-0123.02
Expiration Date FEB. 2, 2009
By Manuel Perez
Miami-Dade Product Control Division

7/13/04
FLA #35686

Kawneer
An Alcoa Company
Product Engineering & Development
555 GUTHRIDGE COURT
NORCROSS, GEORGIA 30092
PHONE (770) 449-5555
FAX (770) 734-1560

THIS DRAWING IS FOR DADE COUNTY PRODUCT APPROVAL ONLY

DESCRIPTION
PRODUCT APPROVAL DRAWINGS
KAWNEER 350 DOORS - IMPACT
MULTIPLE INFILLS
PROTOCOLS PA 201/202/203

DRAWN BY: JME
DATE: 12-4-00
DRWG. NO.: NOA200-001
SHEET: 3 of 10
NOA200-001-03

PERIMETER FASTENER LOCATIONS

18 GUAGE (.050") X 40 KSI LIGHT GUAGE STEEL FRAMING

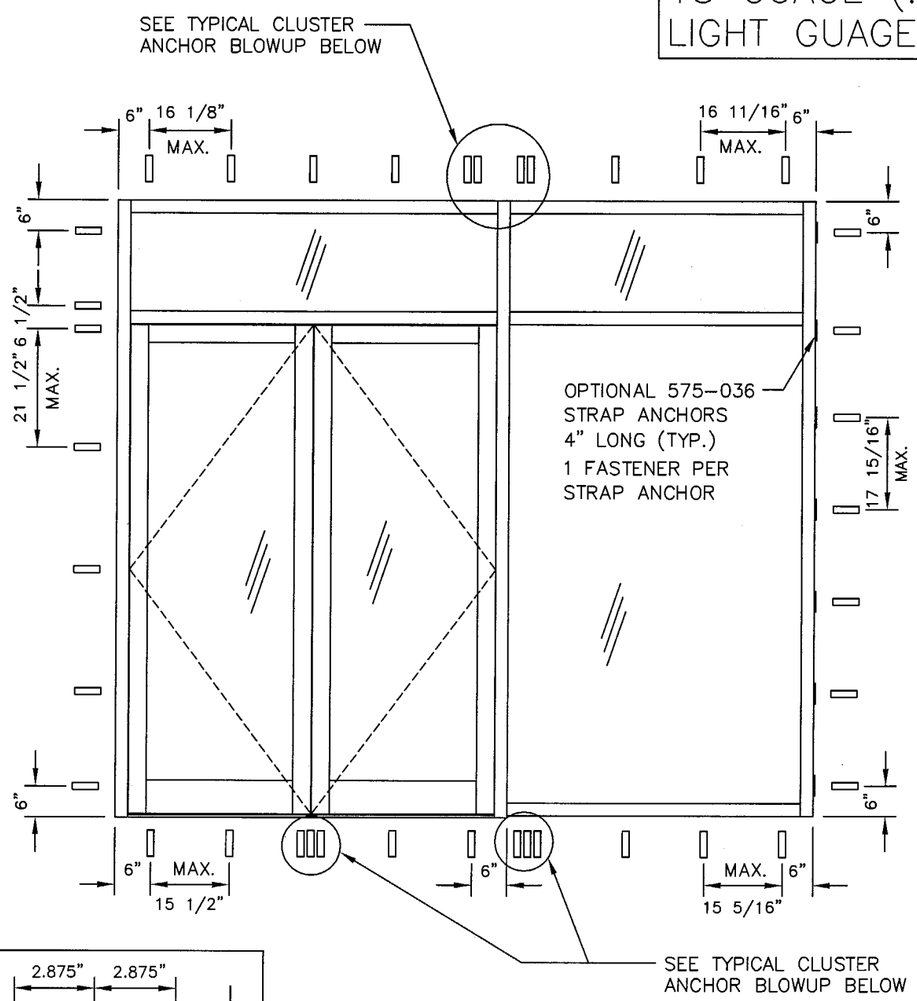

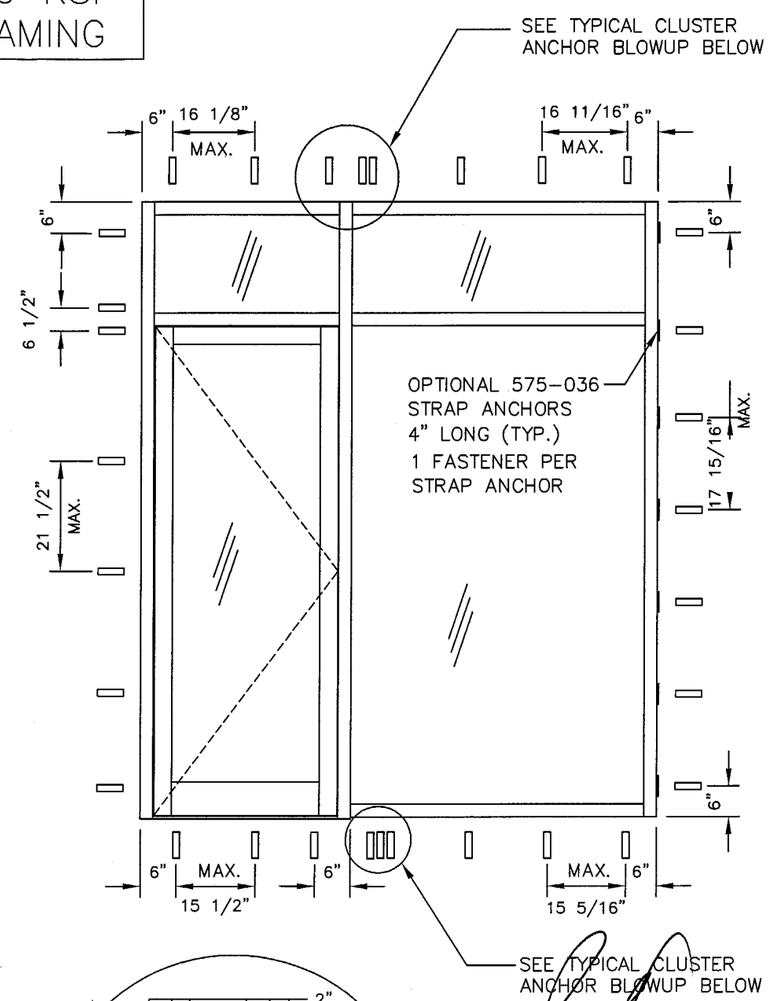

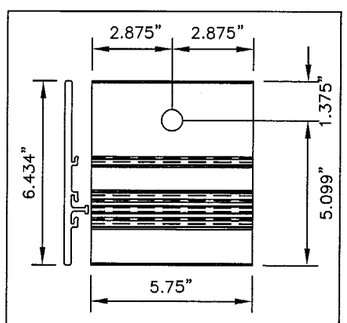

STRAP ANCHOR DETAIL

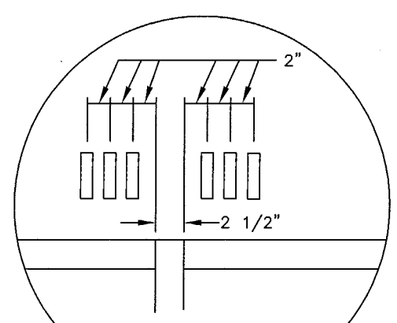

TYPICAL CLUSTER ANCHOR SPACING

FASTENER SCHEDULE

NUMBER	MATERIAL	DESCRIPTION	SUBSTRATE	LOCATION	MIN. EMBED.
–	–	5/16" DIA. TEK SCREW	18 GUAGE STEEL	575-003 HEAD / SILL 575-001 JAMB W/O 575-036 STRAP ANCHOR	0.050"

Ballard L. Argus, P.E.
844 NW 91st Terrace
Plantation, Florida 33324
1-(954)-581-7678

E.C. NO.	REV.	DATE	DESCRIPTION OF REVISION	BY
-	5	7-13-04	REVISED PER DADE COUNTY	DEH
-	4	3-18-04	REVISED PER DADE COUNTY. REVISED DRAWING NUMBER	DEH
-	3	1-30-04	ADD FLAT HEAD FASTENER OPTION	PTT
-	2	4-10-01	NO CHANGE	JME
-	1	1-11-01	REVISED PER DADE COUNTY	JME

PRODUCT RENEWED
as complying with the Florida Building Code
Acceptance No. 04-0123.02
Expiration Date FEB. 2, 2009
By Miami-Dade Product Control Division

7/13/04
FL#35686

Kawneer
An Alcoa Company
Product Engineering & Development
555 GUTHRIDGE COURT
NORCROSS, GEORGIA 30092
PHONE (770) 449-5555
FAX (770) 734-1560

THIS DRAWING IS FOR DADE COUNTY PRODUCT APPROVAL ONLY

DESCRIPTION
PRODUCT APPROVAL DRAWINGS
KAWNEER 350 DOORS - IMPACT
MULTIPLE INFILLS
PROTOCOLS PA 201/202/203

DRAWN BY: JME
DATE: 12-4-00
DRWG. NO.: NOA200-001
SHEET: 4 of 10
NOA200-001-04

MATERIALS LIST

#	PT. NO.	DESCRIPTION	DIMENSIONS	MATERIAL	MANUFACTURER	NOTES
1	27-074	STANDARD FIXED FRAME GASKET	.188 SPACE	EPDM	KAWNEER RUBBER & PLASTICS	
2	27-078	DOOR BULB WEATHERING	.125 SPACE	ALCRYN	ASTRO PLASTICS	
3	27-342	DOOR SETTING BLOCK	0.188 x 0.563 x 4.125	NEOPRENE OR EPT	KAWNEER RUBBER & PLASTICS	
4	27-563	FIXED DOOR GASKET	.188 SPACE	EPDM	KAWNEER RUBBER & PLASTICS	
5	27-845	GLAZING TAPE / SILICONE SPACER	.250 SPACE	SEMI-RIGID POLYURETHANE FOAM	NORTON	NORTON V2208
6	60-315	DOOR STOP COVER	0.375 x 0.862 x 0.050	6063-T6 ALUMINUM	KAWNEER	
7	60-316	DOOR STOP BASE	0.500 x 0.834 x 0.065	6063-T6 ALUMINUM	KAWNEER	
8	69-139	THRESHOLD	0.500 x 4.000 x 0.125	6063-T6 ALUMINUM	KAWNEER	
9	127-011	SILICONE SPACER	.250 SPACE	SANTOPRENE	KAWNEER RUBBER & PLASTICS	
10	127-012	SILICONE SPACER	.313 SPACE	SANTOPRENE	KAWNEER RUBBER & PLASTICS	
11	127-015	FRAME SETTING BLOCK	0.813 x 0.813	EPDM	KAWNEER RUBBER & PLASTICS	
12	175-313	WATER DEFLECTOR	–	PVC	ASTRO PLASTICS	
13	200-005	DOOR STILE	3.500 x 1.750 x 0.125	6063-T6 ALUMINUM	KAWNEER	
14	200-006	ACTIVE DOOR MEETING STILE	3.500 x 1.750 x 0.125	6063-T6 ALUMINUM	KAWNEER	
15	200-007	INACTIVE DOOR MEETING STILE	3.562 x 1.750 x 0.125	6063-T6 ALUMINUM	KAWNEER	
16	200-023	DOOR TOP RAIL	3.500 x 1.724 x 0.125	6063-T6 ALUMINUM	KAWNEER	
17	200-032	DOOR BOTTOM RAIL	6.500 x 1.724 x 0.125	6063-T6 ALUMINUM	KAWNEER	
18	200-496	ADJUSTABLE ASTRAGAL WEATHERING ASSY.	–	VARIED	KAWNEER	
19	200-795	DOOR BOTTOM RAIL WEATHER SWEEP ASSY.	–	VARIED	KAWNEER	
20	575-001	JAMB	2.500 x 5.000 x 0.090	6063-T6 ALUMINUM	KAWNEER	
21	575-006	SILL/HEAD	2.500 x 4.952 x 0.090	6063-T6 ALUMINUM	KAWNEER	
22	575-004	GLASS STOP	1.543 x 1.933 x 0.075	6063-T6 ALUMINUM	KAWNEER	
23	575-011	HORIZONTAL MULLION	2.500 x 4.952 x 0.090	6063-T6 ALUMINUM	KAWNEER	
24	575-020	DOOR TRANSOM BAR	2.500 x 4.952 x 0.090	6063-T6 ALUMINUM	KAWNEER	
25	575-021	DOOR TRANSOM BAR / HEADER	2.500 x 4.952 x 0.090	6063-T6 ALUMINUM	KAWNEER	
26	575-029	1/4" GLAZING ADAPTER	0.756 x 0.531 x 0.062	6063-T6 ALUMINUM	KAWNEER	
27	575-033	DOOR TRANSOM POCKET FILLER	1.748 x 2.710 x 0.090	6063-T6 ALUMINUM	KAWNEER	
28	575-035	DEEP POCKET FILLER	1.465 x 4.316 x 0.090	6063-T6 ALUMINUM	KAWNEER	
29	575-036	OPTIONAL STRAP ANCHOR	0.857 x 6.434 x 0.250	6063-T6 ALUMINUM	KAWNEER	
30	575-037	SILL FLASHING	2.594 x 5.250 x 0.080	6063-T6 ALUMINUM	KAWNEER	
31	575-043	EXTERIOR DOOR GLASS STOP	1.273 x 0.351 x 0.070	6063-T6 ALUMINUM	KAWNEER	
32	575-045	INTERIOR DOOR GLASS STOP	1.354 x 1.359 x 0.188	6063-T6 ALUMINUM	KAWNEER	
33	575-050	DOOR JAMB	2.500 x 5.000 x 0.125	6063-T6 ALUMINUM	KAWNEER	
34	575-111	DOOR JAMB STEEL REINFORCEMENT	1.500 x 4.000 x 0.188	50 KSI STEEL	VARIES	
35	575-114	END DAM	1.750 x 2.000 x 0.050	6063-T6 ALUMINUM	KAWNEER	
36	963-239	INTERIOR DOOR GLASS STOP	1.354 x 1.359 x 0.100	6063-T6 ALUMINUM	KAWNEER	
37	963-240	EXTERIOR DOOR GLASS STOP	1.273 x 0.500 x 0.070	6063-T6 ALUMINUM	KAWNEER	
38	28-260	DOOR STOP ATTACHMENT SCREW	#8 x 3/8" PHTFS	CARBON STEEL – ZINC PLATED	VARIES	
39	128-267	SPLINE SCREW	#12 x 1" PHTFS	SAE GRADE 5 STEEL	VARIES	
40	128-271	STEEL ATTACHMENT SCREW	#12 x 5/8" PHTFS	300 SERIES STAINLESS STEEL	VARIES	
41	128-910	DOOR GLASS STOP ATTACHMENT SCREW	#10 x 1/2" FHTFS	300 SERIES STAINLESS STEEL	VARIES	
42	28-315	DOOR BOTTOM RAIL WEATHER SWEEP ATTACHMENT SCREW	#6 x 3/8" FHTFS	400 SERIES STAINLESS STEEL	VARIES	
43	128-439	DOOR ADJUST. ASTRAGAL WEATHERING ATTACHMENT SCREW	#6 x 11/16" FH	ZINC PLATED CARBON STEEL	VARIES	
44	575-022	TRANSOM BAR WITH EXTRUDED FIN	2.500 x 4.952 x 0.090	6063-T6 ALUMINUM	KAWNEER	
45	575-023	TRANSOM BAR/HEADER WITH EXTRUDED FIN	2.500 x 4.952 x 0.090	6063-T6 ALUMINUM	KAWNEER	
46	575-051	DOOR JAMB WITH EXTRUDED FIN	2.500 x 5.000 x 0090	6063-T6 ALUMINUM	KAWNEER	
47	575-007	SNAP-IN FILLER	1.080 x 0.252 x 0.050	6063-T6 ALUMINUM	KAWNEER	

GENERAL NOTES:

1. SEE SHEET 2, 3, 4 OF 8 FOR PERIMETER FASTENER SCHEDULE AND LOCATIONS.

2. SEE IR500 PRODUST APPROVALS FOR OTHER FRAME AND FRAME GLAZING OPTIONS.

3. THESE DRAWINGS SHOULD BE USED IN CONJUCTION WITH THE STANDARD PRODUCT INSTALLATION INSTRUCTIONS.

4. THE FRAMING MUST BE SHIMMED WITH A TYPE OF SHIM COMPLYING WITH THE REQUIREMENTS OF THE FLORIDA BUILDING CODE AND IS CAPABLE OF RESISTING THE FRAME'S ROTATION.

5. A 4/3 INCREASE IN ALLOWABLE STRESS FACTORS FOR WIND LOAD HAS NOT BEEN USED IN THE DESIGN OF THIS ENTRANCE DOOR STOREFRONT SYSTEM AND ANCHOR CALCULATIONS.

E. C. NO.	REV.	DATE	DESCRIPTION	BY
-	5	7-13-04	REVISED PER DADE COUNTY, ADD NOTES TO SHEET	DEH
-	4	3-18-04	CHANGE TO 6063-T6 ALUMINUM, REVISED DRAWING NUMBER	DEH
-	3	1-30-04	ADD EXTRUSION 575-022, 575-023, AND 575-051	PTT
-	2	4-10-01	NO CHANGE	JME
-	1	1-11-01	REVISED PER DADE COUNTY	JME

Ballard L. Argus, P.E.
844 NW 91st Terrace
Plantation, Florida 33324
1-(954)-581-7678

7/13/04
Fn #38626

PRODUCT RENEWED
as complying with the Florida Buiding Code
Acceptance No. 04-0173.02
Expiration Date FEB. 2, 2009
By Manuel Perez
Miami Dade Product Control Division

Kawneer
An Alcoa Company
Product Engineering & Development

555 GUTHRIDGE COURT
NORCROSS, GEORGIA 30092
PHONE (770) 449-5555
FAX (770) 734-1560

THIS DRAWING IS FOR DADE COUNTY PRODUCT APPROVAL ONLY

DESCRIPTION
PRODUCT APPROVAL DRAWINGS
KAWNEER 350 DOORS - IMPACT
MULTIPLE INFILLS
PROTOCOLS PA 201/202/203

DRAWN BY: JME
DATE: 12-4-00
DRWG. NO.: NOA200-001
SHEET: 5 of 10
NOA200-001-05

HARDWARE SCHEDULES

REVISIONS	DOOR NO.: DADE COUNTY APPROVED PRODUCT				ELEV.:					
	DOOR TYPE: 350, S/A PAIR, O. P. or B. H.	SIZE: 6'-0" X 8'-0"		FIN.:	QTY.:	ARCH. HDWR. SET: -				
	HARDWARE DESCRIPTION	PART NUMBER	FINISH	QUANTITY	BY KAWNEER	BY OTHERS	PHYSICAL HDWR BY OTHERS REQ'D AT KAWNEER	PREPARATION KAWNEER	PREPARATION FIELD	SHIP LOOSE
	CLOSER OPTIONAL	-	-	-						
	TOP OFFSET PIVOT	50-322		2	X			X		
	INTERMEDIATE OFFSET PIVOT	50-331		2	X			X		
	BOTTOM OFFSET PIVOT	50-326/327		2	X			X		
	A/R CYL. OPERATER FLUSHBOLT	1871W-30-628		4	X			X		
	A/R FLUSHBOLT GUIDE PACKAGE	41-0828		4	X			X		
	A/R 1850A MS LOCK	50-112		2	X			X		
	CYLINDERS	37-177		5	X			X		
					X			X		
	THRESHOLD	69-139	10	1	X			X		
	BOTTOM DOOR WEATHERING	200-795		2	X				X	X
	THUMBTURNS (INTERIOR)	37-176		5	X			X		
	ALTERNATE HINGING									
	BUTT HINGES	37-232		6	X			X		

200-795 BOTTOM DOOR WEATHERING: 27-406 SWEEP GASKET EXTRUSION
27-407 SWEEP GASKET FILLER
27-309 SWEEP GASKET

A/R = ADAMS RITE

REVISIONS	DOOR NO.: DADE COUNTY APPROVED PRODUCT				ELEV.:					
	DOOR TYPE: 350, S/A SINGLE, O. P. or B. H.	SIZE: 3'-0" X 8'-0"		FIN.:	QTY.:	ARCH. HDWR. SET: -				
	HARDWARE DESCRIPTION	PART NUMBER	FINISH	QUANTITY	BY KAWNEER	BY OTHERS	PHYSICAL HDWR BY OTHERS REQ'D AT KAWNEER	PREPARATION KAWNEER	PREPARATION FIELD	SHIP LOOSE
	CLOSER OPTIONAL	-	-	-						
	TOP OFFSET PIVOT	50-322		1	X			X		
	INTERMEDIATE OFFSET PIVOT	50-331		1	X			X		
	BOTTOM OFFSET PIVOT	50-326/327		1	X			X		
	A/R CYL. OPERATER FLUSHBOLT	1871W-30-628		2	X			X		
	A/R FLUSHBOLT GUIDE PACKAGE	41-0828		2	X			X		
	A/R 1850A MS LOCK	50-112		1	X			X		
	CYLINDERS	37-177		3	X			X		
					X			X		
	THRESHOLD	69-139	10	1	X			X		
	BOTTOM DOOR WEATHERING	200-795		1	X				X	X
	THUMBTURNS (INTERIOR)	37-176		3	X			X		
	ALTERNATE HINGING									
	BUTT HINGES	37-232		3	X			X		

200-795 BOTTOM DOOR WEATHERING: 27-406 SWEEP GASKET EXTRUSION
27-407 SWEEP GASKET FILLER
27-309 SWEEP GASKET

A/R = ADAMS RITE

Ballard L. Argus, P.E.
844 NW 91st Terrace
Plantation, Florida 33324
1-(954)-581-7678

E. C. NO.	REV.	DATE	DESCRIPTION	BY
-	3	3-18-04	REVISED DRAWING NUMBER	DEH
-	2	4-10-01	REVISED MS LOCK LOCATION	JME
-	1	1-11-01	REVISED PER DADE COUNTY	JME
-	-	12-4-00	INITIAL SUBMITTAL	JME

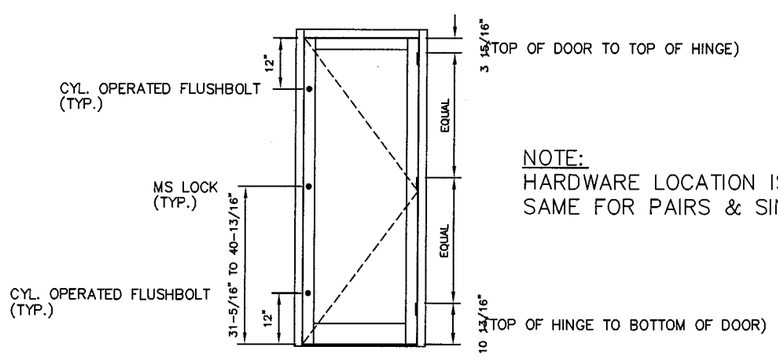

TYPICAL HARDWARE LOCATION (BUTT HINGES)

NOTE:
HARDWARE LOCATION IS THE SAME FOR PAIRS & SINGLES

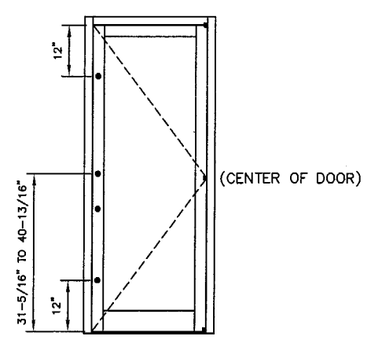

TYPICAL HARDWARE LOCATION (OFFSET PIVOTS)

7/13/04
FL#35526

PRODUCT RENEWED
as complying with the Florida Building Code
Acceptance No. 04-0123.02
Expiration Date FEB. 2, 2009
By Manuel Perez
Miami Dade Product Control Division

DOOR CORNER CONSTRUCTION

VERTICAL STILES RUN THROUGH AND ARE ATTACHED TO THE TOP AND BOTTOM RAILS WITH 1/4" THICK EXTRUDED ALUMINUM CHANNELS, 1/4-20 x 3/4" PAN HEAD MACHINE SCREWS, AND 3/16" THICK STEEL NUT PLATES. THE INTERSECTION OF EACH CORNER JOINT IS WELDED WITH A 1/2" DIAMETER PLUG WELD AND A 1-1/8" LONG FILLET WELD AT BOTH WEBS OF EACH RAIL.

Kawneer
An Alcoa Company
Product Engineering & Development
555 GUTHRIDGE COURT
NORCROSS, GEORGIA 30092
PHONE (770) 449-5555
FAX (770) 734-1560

THIS DRAWING IS FOR DADE COUNTY PRODUCT APPROVAL ONLY

DESCRIPTION	DRAWN BY	DATE
PRODUCT APPROVAL DRAWINGS KAWNEER 350 DOORS - IMPACT MULTIPLE INFILLS PROTOCOLS PA 201/202/203	JME	12-4-00
	DRWG. NO. NOA200-001	
	SHEET 6 of 10	NOA200-001-06

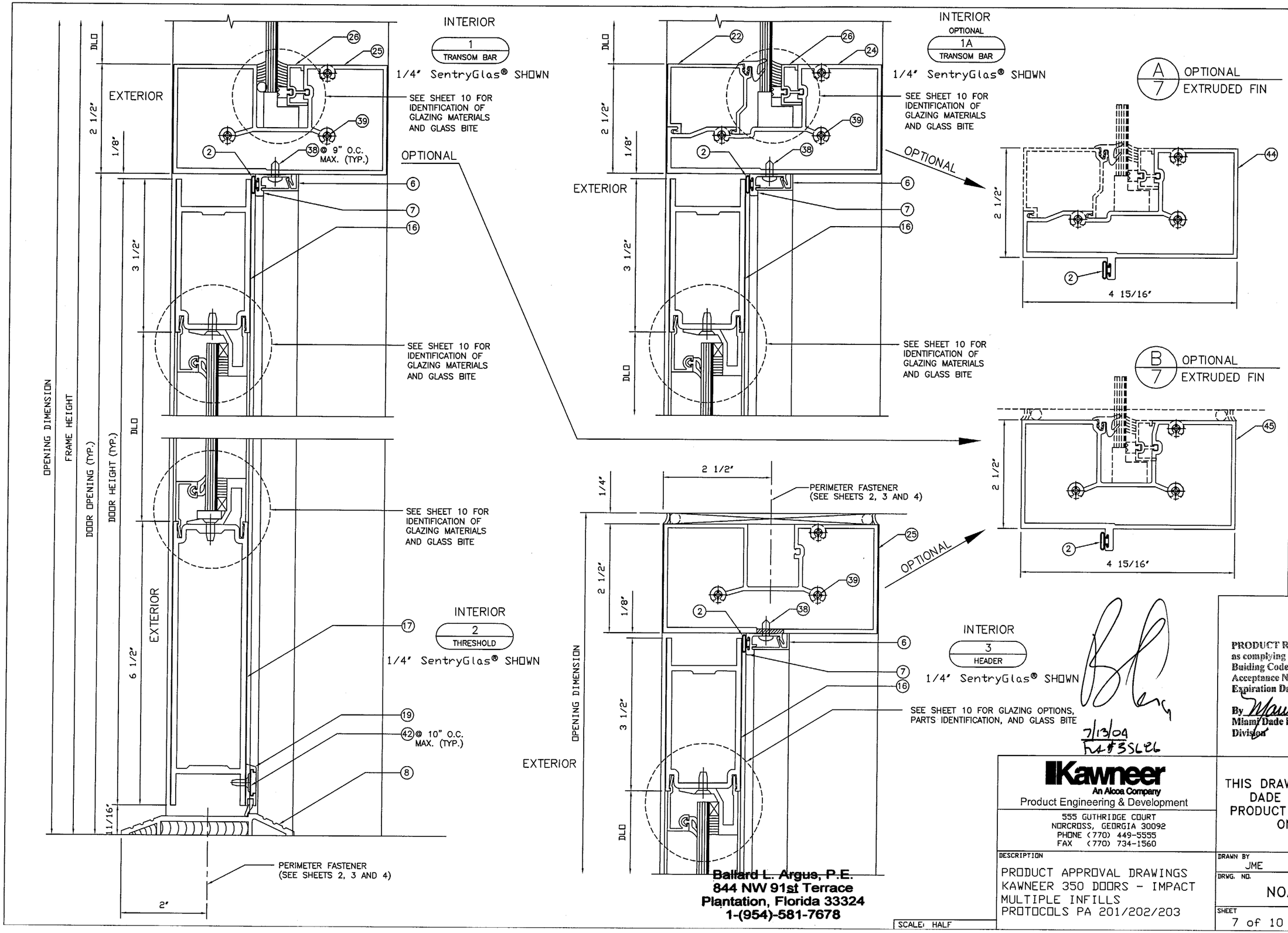

E.C. NO.	REV.	DATE	DESCRIPTION	BY
-	5	7-13-04	REVISED PER DADE COUNTY	DEH
-	4	3-18-04	REVISED DRAWING NUMBER	DEH
-	3	1-30-04	ADD EXTRUDED FIN DETAILS 'A' AND 'B'	PTT
-	2	4-10-01	NO CHANGE	JME
-	1	1-11-01	REVISED PER DADE COUNTY	JME

PRODUCT RENEWED
as complying with the Florida Buiding Code
Acceptance No 04-0123.02
Expiration Date FEB 2, 2009
By Miami Dade Product Control Division

7/13/04
FL#35626

Kawneer
An Alcoa Company
Product Engineering & Development
555 GUTHRIDGE COURT
NORCROSS, GEORGIA 30092
PHONE (770) 449-5555
FAX (770) 734-1560

THIS DRAWING IS FOR DADE COUNTY PRODUCT APPROVAL ONLY

DESCRIPTION
PRODUCT APPROVAL DRAWINGS
KAWNEER 350 DOORS - IMPACT
MULTIPLE INFILLS
PROTOCOLS PA 201/202/203

DRAWN BY	DATE
JME	12-4-00
DRWG. NO.	NOA200-001
SHEET 7 of 10	NOA200-001-07

SCALE: HALF

Ballard L. Argus, P.E.
844 NW 91st Terrace
Plantation, Florida 33324
1-(954)-581-7678

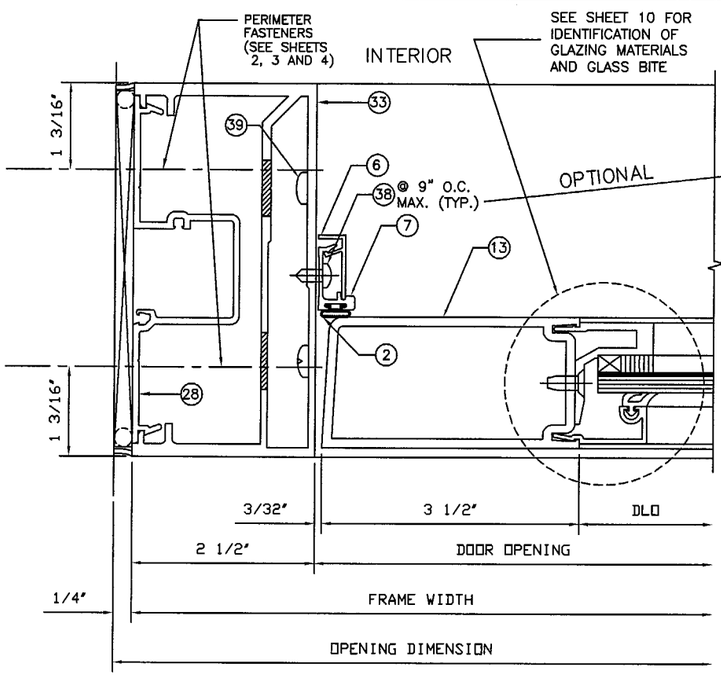

4 JAMB TO WALL — EXTERIOR

1/4" SentryGlas® SHOWN

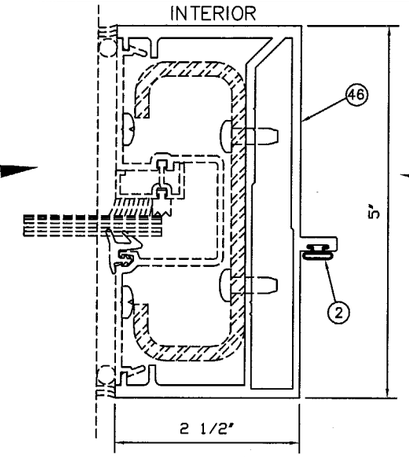

C/8 OPTIONAL EXTRUDED FIN

EXTERIOR

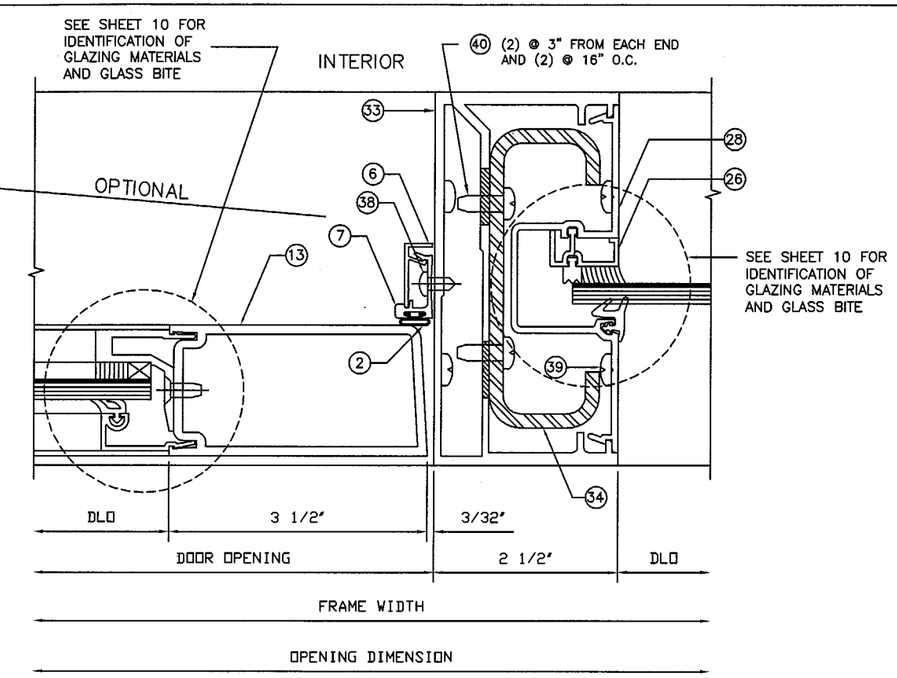

5 INTERM. JAMB — EXTERIOR

1/4" SentryGlas® SHOWN

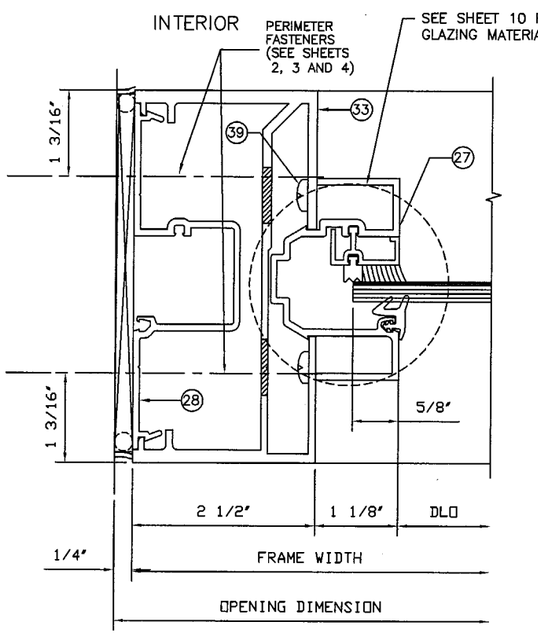

6 JAMB TO WALL — EXTERIOR

1/4" SentryGlas® SHOWN

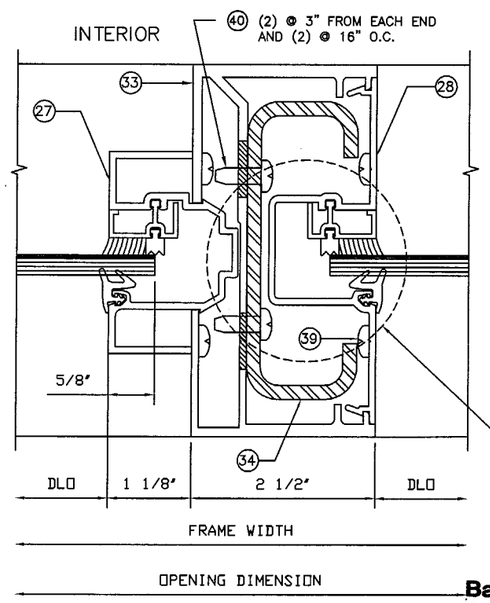

7 INTERM. JAMB — EXTERIOR

1/4" SentryGlas® SHOWN

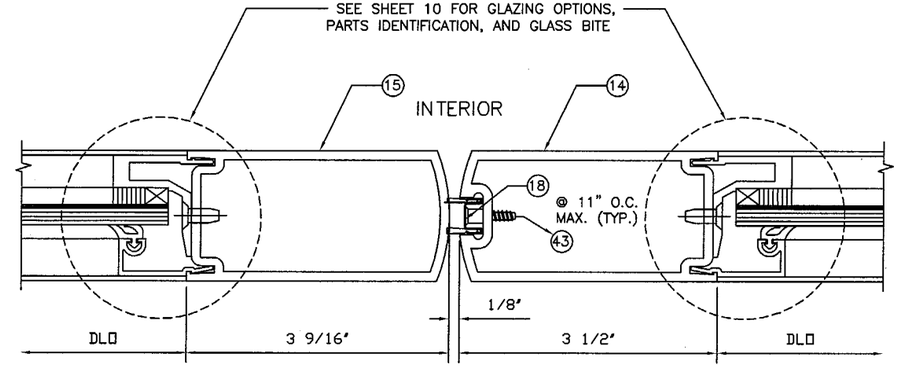

8 MEETING STILES — EXTERIOR

1/4" SentryGlas® SHOWN

SEE SHEET 10 FOR IDENTIFICATION OF GLAZING MATERIALS

Ballard L. Argus, P.E.
844 NW 91st Terrace
Plantation, Florida 33324
1-(954)-581-7678

7/13/04

FL#35686

SCALE: HALF

E.C. NO.	REV.	DATE	DESCRIPTION	BY
-	5	7-13-04	REVISED PER DADE COUNTY	DEH
-	4	3-18-04	REVISED DRAWING NUMBER	DEH
-	3	1-30-04	ADD EXTRUDED FIN DETAIL "C".	PTT
-	2	4-10-01	NO CHANGE	JME
-	1	1-11-01	REVISED PER DADE COUNTY	JME

PRODUCT RENEWED
as complying with the Florida Buiding Code
Acceptance No. 04-0123.07
Expiration Date FEB. 2, 2009
By Manuel Perez
Miami Dade Product Control Division

Kawneer
An Alcoa Company
Product Engineering & Development
555 GUTHRIDGE COURT
NORCROSS, GEORGIA 30092
PHONE (770) 449-5555
FAX (770) 734-1560

THIS DRAWING IS FOR DADE COUNTY PRODUCT APPROVAL ONLY

DESCRIPTION: PRODUCT APPROVAL DRAWINGS KAWNEER 350 DOORS - IMPACT MULTIPLE INFILLS PROTOCOLS PA 201/202/203

DRAWN BY: JME — DATE: 12-4-00

DRWG. NO.: NOA200-001

SHEET: 8 of 10 — NOA200-001-08

EXTERIOR 9 HEAD

1/4" SentryGlas® SHOWN

SEE IR 500 PRODUCT APPROVALS FOR OTHER FRAME AND ANCHORAGE OPTIONS

EXTERIOR 10 INTERM. HORIZ.

1/4" SentryGlas® SHOWN

EXTERIOR 11 SILL

1/4" SentryGlas® SHOWN

SEE IR 500 PRODUCT APPROVALS FOR OTHER FRAME AND ANCHORAGE OPTIONS

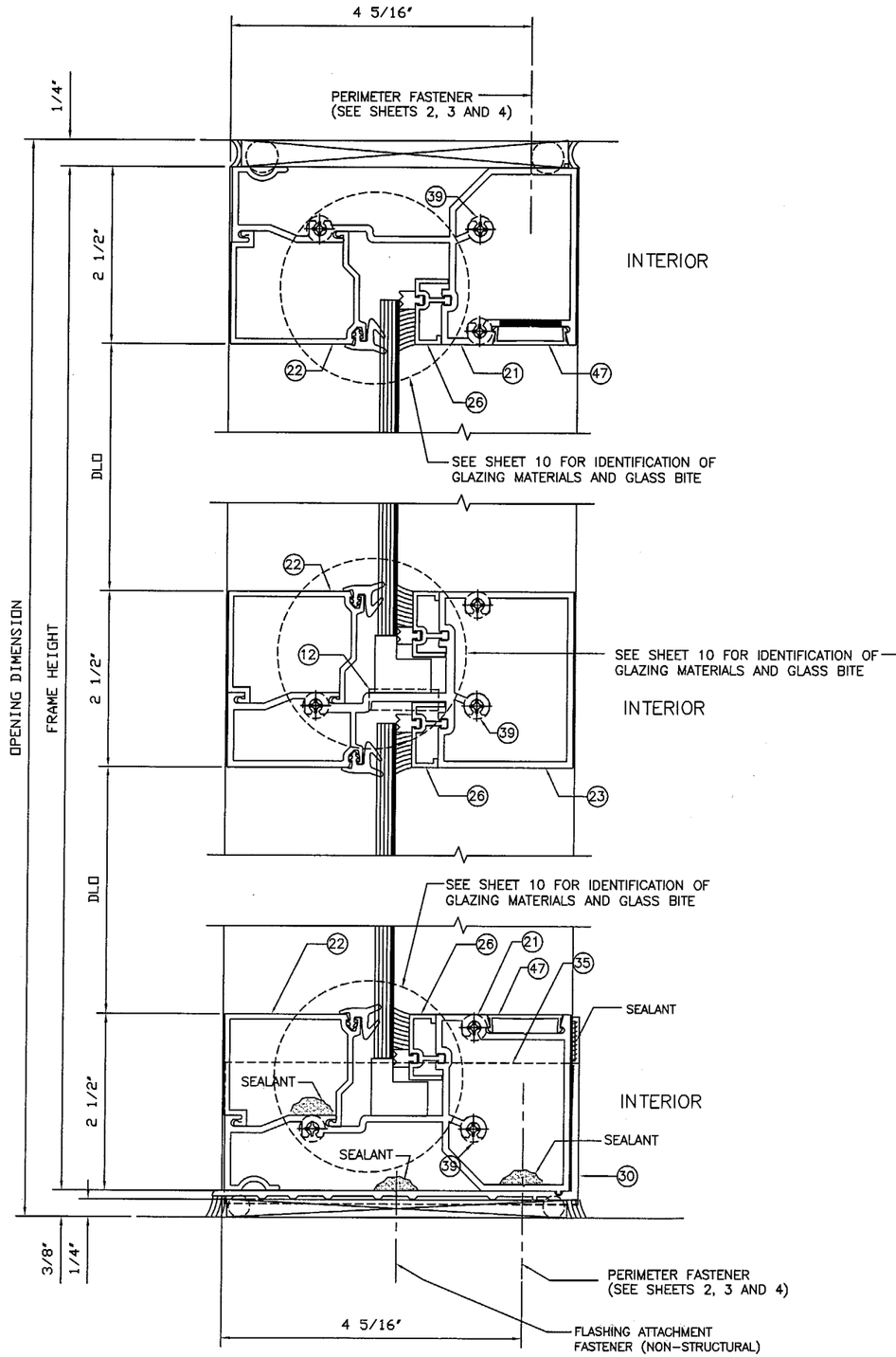

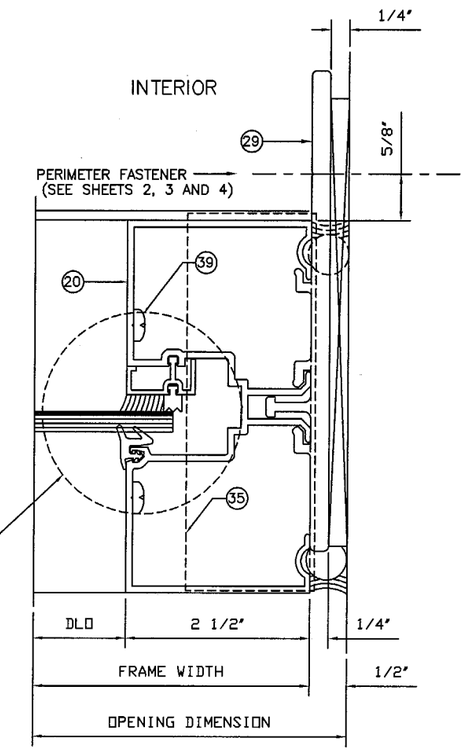

12 JAMB EXTERIOR

1/4" SentryGlas® SHOWN

SEE IR 500 PRODUCT APPROVALS FOR OTHER ANCHORAGE OPTIONS

Ballard L. Argus, P.E.
844 NW 91st Terrace
Plantation, Florida 33324
1-(954)-581-7678

7/13/04
Fl #35626

SCALE: HALF

E.C. NO.	REV.	DATE	DESCRIPTION	BY
-	4	7-13-04	REVISED PER DADE COUNTY	DEH
-	3	3-18-04	REVISED DRAWING NUMBER	DEH
-	2	4-10-01	NO CHANGE	JME
-	1	1-11-01	REVISED PER DADE COUNTY	JME
-	-	12-4-00	INITIAL SUBMITTAL	JME

PRODUCT RENEWED
as complying with the Florida Building Code
Acceptance No. 04-0123.02
Expiration Date FEB. 2, 2009
By Manuel Perez
Miami Dade Product Control Division

Kawneer
An Alcoa Company
Product Engineering & Development
555 GUTHRIDGE COURT
NORCROSS, GEORGIA 30092
PHONE (770) 449-5555
FAX (770) 734-1560

THIS DRAWING IS FOR DADE COUNTY PRODUCT APPROVAL ONLY

DESCRIPTION
PRODUCT APPROVAL DRAWINGS
KAWNEER 350 DOORS - IMPACT
MULTIPLE INFILLS
PROTOCOLS PA 201/202/203

DRAWN BY JME
DATE 12-4-00
DRWG. NO. NOA200-001
SHEET 9 of 10
NOA200-001-09

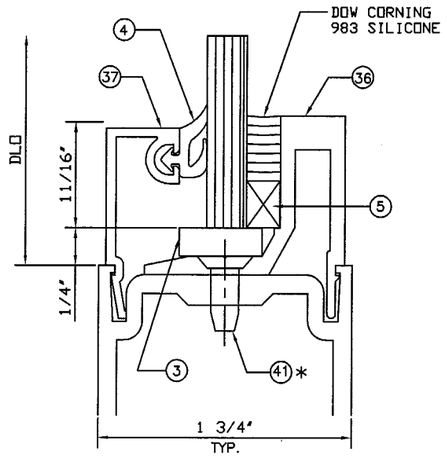

TYPICAL DOOR GLAZING DETAIL
1/4" SentryGlas®
ACTUAL SIZE

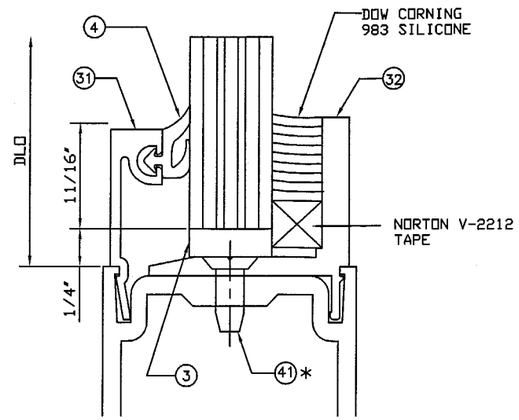

TYPICAL DOOR GLAZING DETAIL
9/16" HRG-2
ACTUAL SIZE

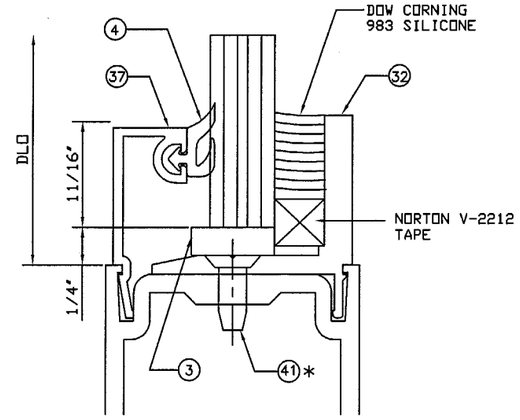

TYPICAL DOOR GLAZING DETAIL
7/16" SAF-GLAS
ACTUAL SIZE

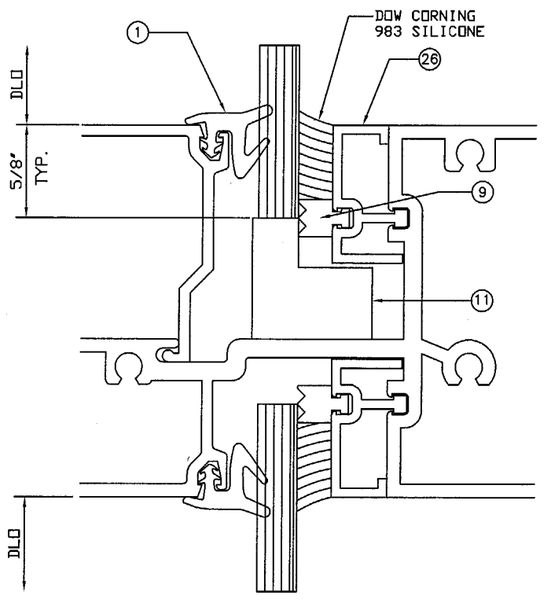

TYPICAL FRAME GLAZING DETAIL
1/4" SentryGlas® SHOWN
ACTUAL SIZE

* 3" FROM EACH END AND MAX. 7-1/2" O.C. @ TOP AND BOTTOM RAIL
3" FROM EACH END AND MAX. 11-1/8" O.C. @ VERTICAL STILES

SEE IR 500 PRODUCT APPROVALS FOR OTHER FRAME GLAZING OPTIONS

Ballard L. Argus, P.E.
844 NW 91st Terrace
Plantation, Florida 33324
1-(954)-581-7678

7/13/04
FLA #35626

E.C. NO.	REV.	DATE	DESCRIPTION	BY
-	3	3-18-04	REVISED DRAWING NUMBER	DEH
-	2	4-10-01	NO CHANGE	JME
-	1	1-11-01	REVISED PER DADE COUNTY	JME
-	-	12-4-00	INITIAL SUBMITTAL	JME

PRODUCT RENEWED
as complying with the Florida Buiding Code
Acceptance No 04-0123.02
Expiration Date FEB. 2, 2009
By Manuel Perez
Miami Dade Product Control Division

Kawneer
An Alcoa Company
Product Engineering & Development
555 GUTHRIDGE COURT
NORCROSS, GEORGIA 30092
PHONE (770) 449-5555
FAX (770) 734-1560

THIS DRAWING IS FOR DADE COUNTY PRODUCT APPROVAL ONLY

DESCRIPTION
PRODUCT APPROVAL DRAWINGS
KAWNEER 350 DOORS - IMPACT
MULTIPLE INFILLS
PROTOCOLS PA 201/202/203

DRAWN BY: JME
DATE: 12-4-00
DRWG. NO.: NOA200-001
SHEET: 10 of 10
NOA200-001-10

SCALE: FULL