MIAMI-DADE

BUILDING CODE COMPLIANCE OFFICE (BCCO)
PRODUCT CONTROL DIVISION

MIAMI-DADE COUNTY, FLORIDA
METRO-DADE FLAGLER BUILDING
140 WEST FLAGLER STREET, SUITE 1603
MIAMI, FLORIDA 33130-1563
(305) 375-2901 FAX (305) 375-2908

NOTICE OF ACCEPTANCE (NOA)

Florida Shutters, Inc.
1055 Commerce Avenue
Vero Beach, FL 32960

SCOPE:
This NOA is being issued under the applicable rules and regulations governing the use of construction materials. The documentation submitted has been reviewed by Miami-Dade County Product Control Division and accepted by the Board of Rules and Appeals (BORA) to be used in Miami Dade County and other areas where allowed by the Authority Having Jurisdiction (AHJ).

This NOA shall not be valid after the expiration date stated below. The Miami-Dade County Product Control Division (In Miami Dade County) and/or the AHJ (in areas other than Miami Dade County) reserve the right to have this product or material tested for quality assurance purposes. If this product or material fails to perform in the accepted manner, the manufacturer will incur the expense of such testing and the AHJ may immediately revoke, modify, or suspend the use of such product or material within their jurisdiction. BORA reserves the right to revoke this acceptance, if it is determined by Miami-Dade County Product Control Division that this product or material fails to meet the requirements of the applicable building code.

This product is approved as described herein, and has been designed to comply with the High Velocity Hurricane Zone of the Florida Building Code.

DESCRIPTION: "Impact" Aluminum Bahama Shutter

APPROVAL DOCUMENT: Drawing No. 1001A, titled "Impact Bahama Shutters", sheets 1 through 10 of 10, prepared by W. W. Schaefer Engineering & Consulting, P.A., dated November 17, 2000, signed and sealed by Warren W. Schaefer, P.E. on March 18, 2004, bearing the Miami-Dade County Product Control Revision stamp with the Notice of Acceptance number and expiration date by the Miami-Dade County Product Control Division.

MISSILE IMPACT RATING: Large and Small Missile Impact

LABELING: Each unit shall bear a permanent label with the manufacturer's name or logo, city, state and the following statement: "Miami-Dade County Product Control Approved", unless otherwise noted herein.

RENEWAL of this NOA shall be considered after a renewal application has been filed and there has been no change in the applicable building code negatively affecting the performance of this product.

TERMINATION of this NOA will occur after the expiration date or if there has been a revision or change in the materials, use, and/or manufacture of the product or process. Misuse of this NOA as an endorsement of any product, for sales, advertising or any other purposes shall automatically terminate this NOA. Failure to comply with any section of this NOA shall be cause for termination and removal of NOA.

ADVERTISEMENT: The NOA number preceded by the words Miami-Dade County, Florida, and followed by the expiration date may be displayed in advertising literature. If any portion of the NOA is displayed, then it shall be done in its entirety.

INSPECTION: A copy of this entire NOA shall be provided to the user by the manufacturer or its distributors and shall be available for inspection at the job site at the request of the Building Official.

This NOA **revises & renews NOA #00-0411.08** and consists of this page 1, evidence submitted page(s) as well as approval document mentioned above.

The submitted documentation was reviewed by **Helmy A. Makar, P.E.**

Helmy A. Makar
04/22/04

NOA No 04-0130.03
Expiration Date: 03/08/2009
Approval Date: 04/22/2004

Florida Shutters, Inc.

NOTICE OF ACCEPTANCE: EVIDENCE SUBMITTED

1. EVIDENCE SUBMITTED UNDER PREVIOUS APPROVAL #00-0411.08

A. DRAWINGS

1. *Drawing No. 1001A, titled " Impact Bahama Shutter ", prepared by W. W. Schaefer Engineering & Consulting, P.A., dated November 17, 2000, sheets 1 through 10 of 10, signed and sealed by Warren W. Schaefer, P.E.*

B. TESTS

1. *Test Report on: 1) Large Missile Impact Test, per PA-201*
   2) Cyclic Wind Pressure Test, per PA-203 and
   3) Uniform Static Air Pressure test per PA-202, of Bahama shutters, prepared by Hurricane Test Laboratory Inc., Report No. ***0205-1203-99****, dated February 28, 2000, signed and sealed by Vinu J. Abraham, P.E.*

C. CALCULATIONS

1. *Anchor analysis and calculations dated 03/29/2000, Pages 1 to 14, prepared by W. W. Schaefer Engineering & Consulting, P.A., signed and sealed by Warren W. Schaefer, P.E.*

D. MATERIAL CERTIFICATION

1. *Certified Tensile Test Report No. 0AM-142, prepared by QC Metallurgical Inc., dated 03/02/2000, per ASTM E8-93, signed and sealed by Frank Grate, P.E.*

2. NEW EVIDENCE SUBMITTED

A. DRAWINGS

1. *Drawing No. 1001A, titled "Impact Bahama Shutters", sheets 1 through 10 of 10, prepared by W. W. Schaefer Engineering & Consulting, P.A., dated November 17, 2000, signed and sealed by Warren W. Schaefer, P.E. on March 18, 2004*

B. TESTS

1. *None.*

C. CALCULATIONS

1. *None.*

D. QUALITY ASSURANCE

1. *By Miami-Dade County Building Code Compliance Office.*

E. MATERIAL CERTIFICATIONS

1. *None.*

Helmy A. Makar, P.E.
Product Control Examiner
NOA No 04-0130.03
Expiration Date: 03/08/2009
Approval Date: 04/22/2004

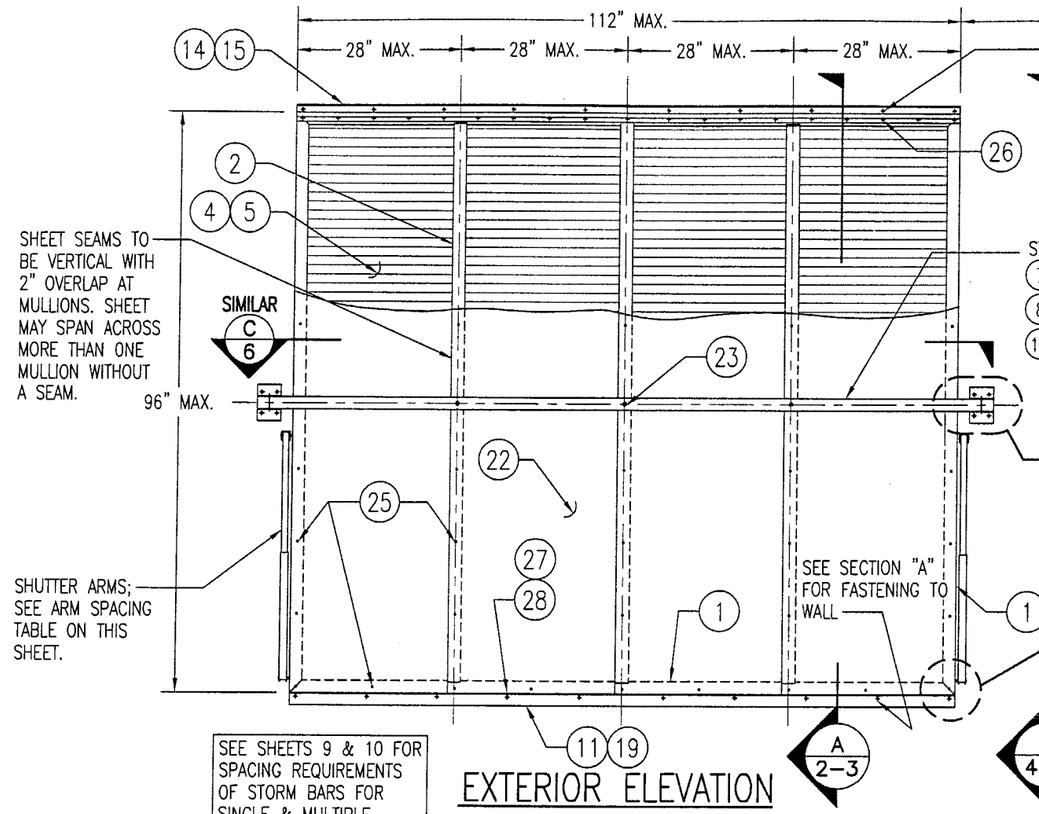

SEE SHEETS 9 & 10 FOR SPACING REQUIREMENTS OF STORM BARS FOR SINGLE & MULTIPLE BAR SHUTTERS.

EXTERIOR ELEVATION
QUAD PANEL SHUTTER

SCALE: 1/2"=1'-0"

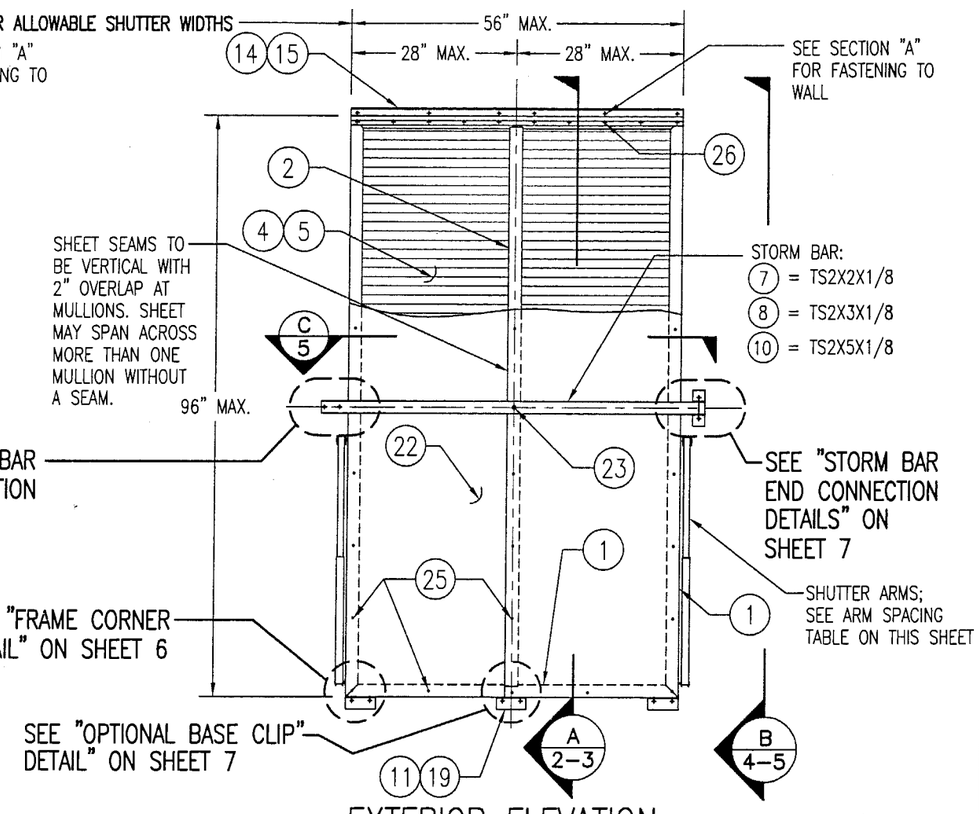

EXTERIOR ELEVATION
DOUBLE PANEL SHUTTER

SCALE: 1/2"=1'-0"

MAX. ALLOWABLE DESIGN WIND LOADS	
POSITIVE	NEGATIVE
80 PSF	80 PSF
SEE SHUTTER & STORM BAR TABLES ON SHEETS 9 & 10 FOR REDUCED LOADS AS CONTROLLED BY SHUTTER SPAN, STORM BAR SPAN & STORM BAR SPACING.	

ARM SPACING TABLE	
SHUTTER HEIGHT	MAXIMUM SPACING
48" OR LESS	56"
49" < h < 60"	45"
61" < h < 72"	38"
73" < h < 84"	32"
85" < h < 96"	28"
VALUES IN THIS TABLE ARE BASED ON PRESSURES RESULTING FROM 3 SECOND GUST WIND SPEEDS UP TO 90 MPH	

NOTE: ALL 2 PANEL SHUTTERS REQUIRE JUST 1 ARM AT EACH SIDE!!

NOTE: THE NUMBER OF PANELS IS GOVERNED BY:
1. IF STORM BARS ARE REQUIRED, ANY NUMBER OF PANELS MAY BE USED PROVIDING THE OVERALL SHUTTER WIDTH DOES NOT EXCEED 112" & THE PANEL WIDTHS DO NOT EXCEED 28".
2. IF NO STORM BARS ARE REQUIRED, ANY NUMBER OF PANELS MAY BE USED & THE SHUTTER OVERALL WIDTH MAY BE INFINATE PROVIDING THE PANEL WIDTHS DO NOT EXCEED 28".

STORM BAR NOTE: THE NUMBER OF STORM BARS REQUIRED WITH EACH SHUTTER TYPICALLY VARIES FROM 1 TO 3 & IS DEPENDENT ON SHUTTER SIZE & REQUIRED DESIGN PRESSURE. SEE ELEVATION SKETCHES & LOAD TABLES ON SHEETS 9 & 10 FOR STORM BAR REQUIREMENTS.

GENERAL NOTES:

1. ALL ALUMINUM EXTRUSIONS SHALL BE 6063-T5 ALLOY UNLESS SHOWN OTHERWISE ON THESE DRAWINGS.
2. IT SHALL BE THE RESPONSIBILITY OF THE PERMIT HOLDER TO VERIFY THE STRUCTURAL INTEGRITY OF THE EXISTING STRUCTURE TO SUPPORT THE LOADS SUPERIMPOSED BY THE SHUTTERS.
3. THESE SHUTTER SYSTEMS ARE DESIGNED TO WITHSTAND WIND PRESSURES, IN THE OPEN POSITION, RESULTING FROM 3 SECOND GUST WIND SPEEDS UP TO 90 MPH IN ACCORDANCE WITH THE FLORIDA BUILDING CODE (FBC) 2001 EDITION.
4. THESE SHUTTER SYSTEMS HAVE BEEN DESIGNED & TESTED IN ACCORDANCE WITH THE FLORIDA BUILDING CODE (FBC) 2001 EDITION AND PROTOCOLS TAS-201, 202 & 203.
5. EACH SHUTTER SHALL HAVE A LEGIBLE & READILY VISIBLE MARKING INSTRUCTING THE OWNER/TENNANT TO SECURE THE SHUTTER WITH BRACKETS & STORM BARS, PER THESE APPROVED DRAWINGS DURING PERIODS OF HURRICANE WARNINGS.
6. EACH SHUTTER ASSEMBLY SHALL BE PERMANENTLY LABELED AS FOLLOWS:
   FLORIDA SHUTTERS, INC.
   VERO BEACH, FLORIDA
   MIAMI-DADE COUNTY PRODUCT CONTROL APPROVED
7. ALL CONCRETE SUBSTRATE SHALL BE MIN. 3000 PSI.
8. ALL WOOD SUBSTRATE SHALL BE MIN. G = 0.55 DENSITY.
9. A 33 1/3% INCREASE IS USED IN THE ANCHOR DESIGN CALCULATIONS DUE TO WIND LOAD.

PRODUCT REVISED
as complying with the Florida Buiding Code
Acceptance No. 04-0130.03
Expiration Date 03/08/2009
By Helmy A. Mahar
Miami Dade Product Control Division

NO.	REVISION DESCRIPTION	BY	DATE

DRAWN BY: W.W.S. | CHECKED BY: W.W.S.
PLOT: 1=24 | DATE: 11/17/00

(DADE)

DRAWING TITLE
IMPACT BAHAMA SHUTTERS

MANUFACTURER
FLORIDA SHUTTERS, INC.
1055 COMMERCE AVENUE
VERO BEACH, FL 32960
(772) 569-2200

CONSULTANTS
W. W. SCHAEFER ENGINEERING & CONSULTING, P.A.
8895 N. MILITARY TRAIL; SUITE C-204
PALM BEACH GARDENS, FL 33410
PHONE: 561-775-4902 FAX: 561-775-4903

CERTIFICATION
MAR 18 2004
WARREN W. SCHAEFER, P.E.
P.E. NO. 44135

DRAWING NO. 1001A | REV.
SHEET NO. 1 OF 10

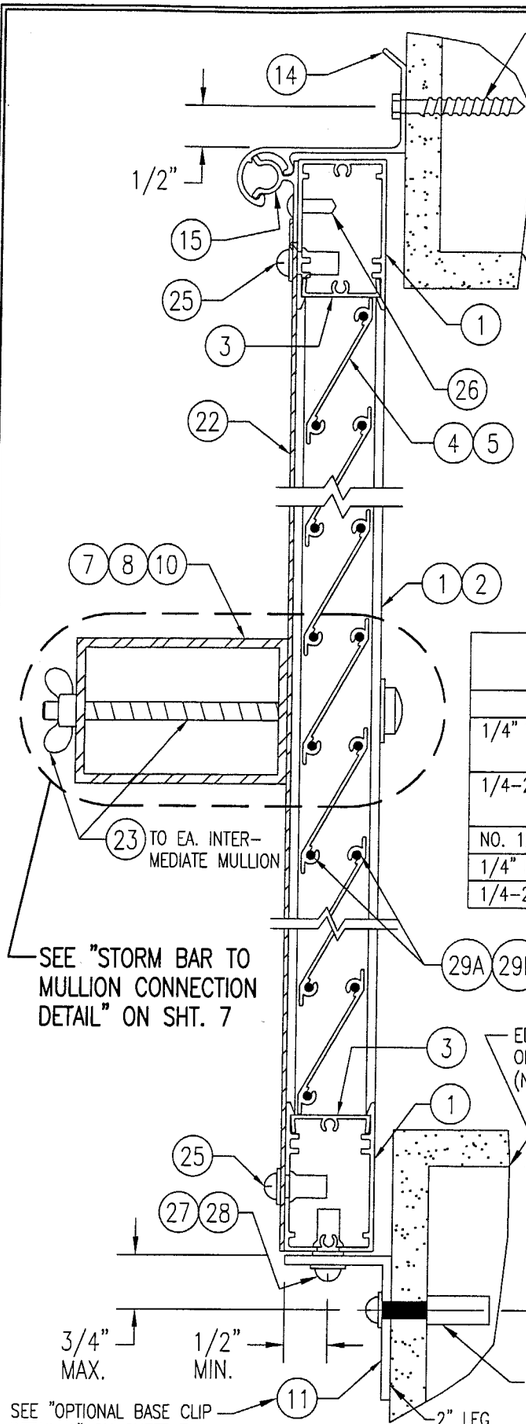

SECTION A/2
SCALE: 1/2 FULL
(FACE MOUNT ONTO BLOCK/CONCRETE)

REQ'D MINIMUM EMBEDMENTS & EDGE DISTANCE FOR OPENING FASTENERS		
FASTENER	EMBEDMENT	EDGE DISTANCE
1/4" TAPCON	1 3/4" INTO BLOCK/CONCR.	SEE DETAILS
	1 1/2" INTO WOOD FRAMING	3/4"
1/4-20 PANEL-MATE	1 5/8" INTO BLOCK/CONCR.	SEE DETAILS
	1 5/8" INTO WOOD FRAMING	3/4"
NO. 12 SMS	1 1/2" INTO WOOD FRAMING	3/4"
1/4" LAG BOLT	1 1/2" INTO WOOD FRAMING	3/4"
1/4-20 RAWL CAULK-IN	1 1/2" INTO BLOCK/CONCR.	SEE DETAILS

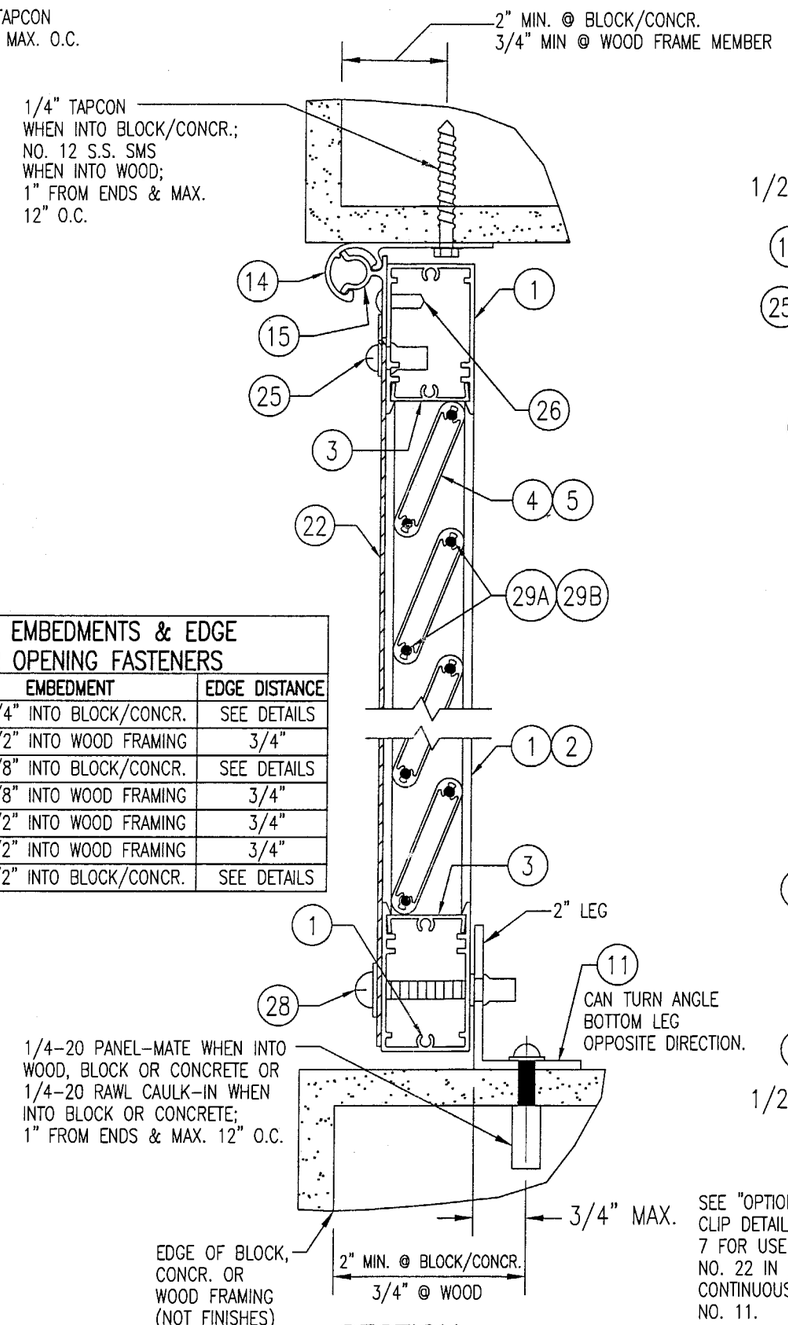

SECTION A/2
SCALE: 1/2 FULL
(RECESS MOUNT ONTO BLOCK, CONCRETE OR WOOD FRAME)

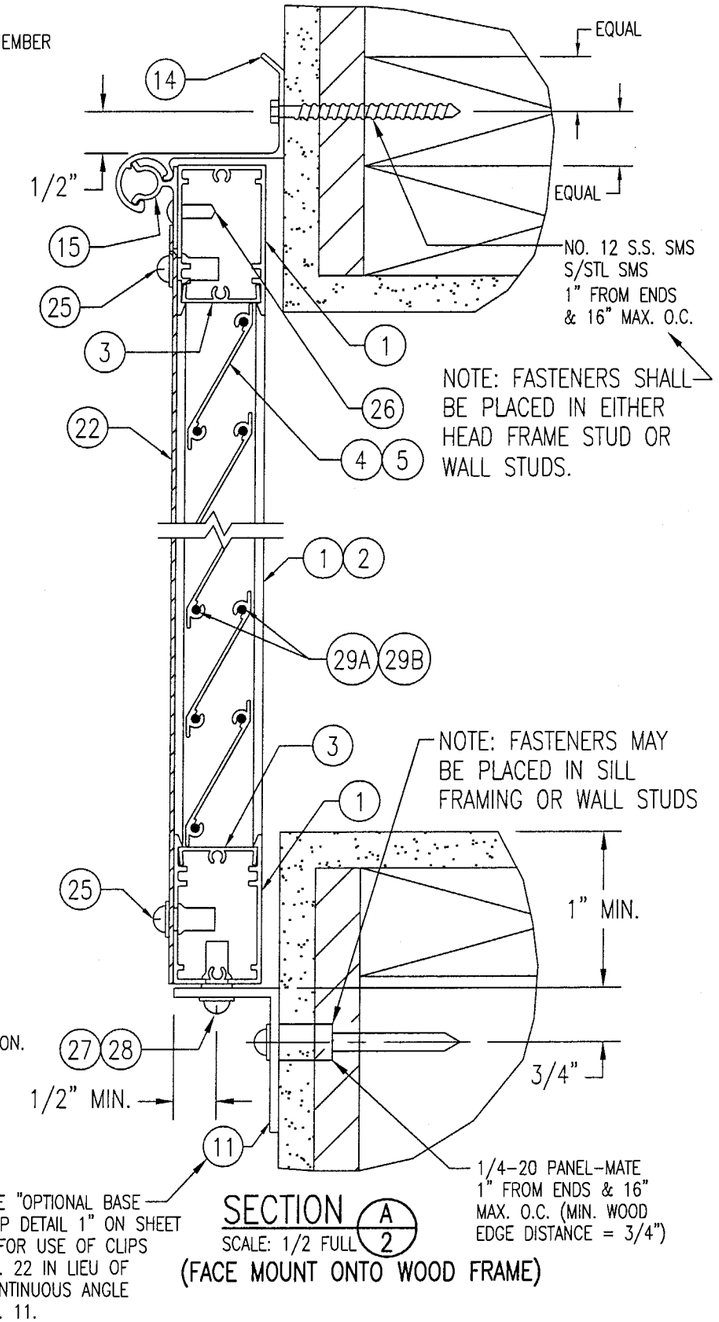

SECTION A/2
SCALE: 1/2 FULL
(FACE MOUNT ONTO WOOD FRAME)

PRODUCT REVISED
as complying with the Florida Buiding Code
Acceptance No 04-0130.03
Expiration Date 03/08/2009
By [signature]
Miami Dade Product Control Division

NO.	REVISION DESCRIPTION	BY	DATE

DRAWN BY: W.W.S. | CHECKED BY: W.W.S.
PLOT: 1=2 | DATE: 11/17/00

(DADE)

DRAWING TITLE
IMPACT BAHAMA SHUTTERS

MANUFACTURER
FLORIDA SHUTTERS, INC.
1055 COMMERCE AVENUE
VERO BEACH, FL 32960
(772) 569-2200

CONSULTANTS
W. W. SCHAEFER ENGINEERING & CONSULTING, P.A.
8895 N. MILITARY TRAIL; SUITE C-204
PALM BEACH GARDENS, FL 33410
PHONE: 561-775-4902 FAX: 561-775-4903

CERTIFICATION
MAR 18 2004
WARREN W. SCHAEFER, P.E.
P.E. NO. 44135

DRAWING NO. 1001A | REV.
SHEET NO. 2 OF 10

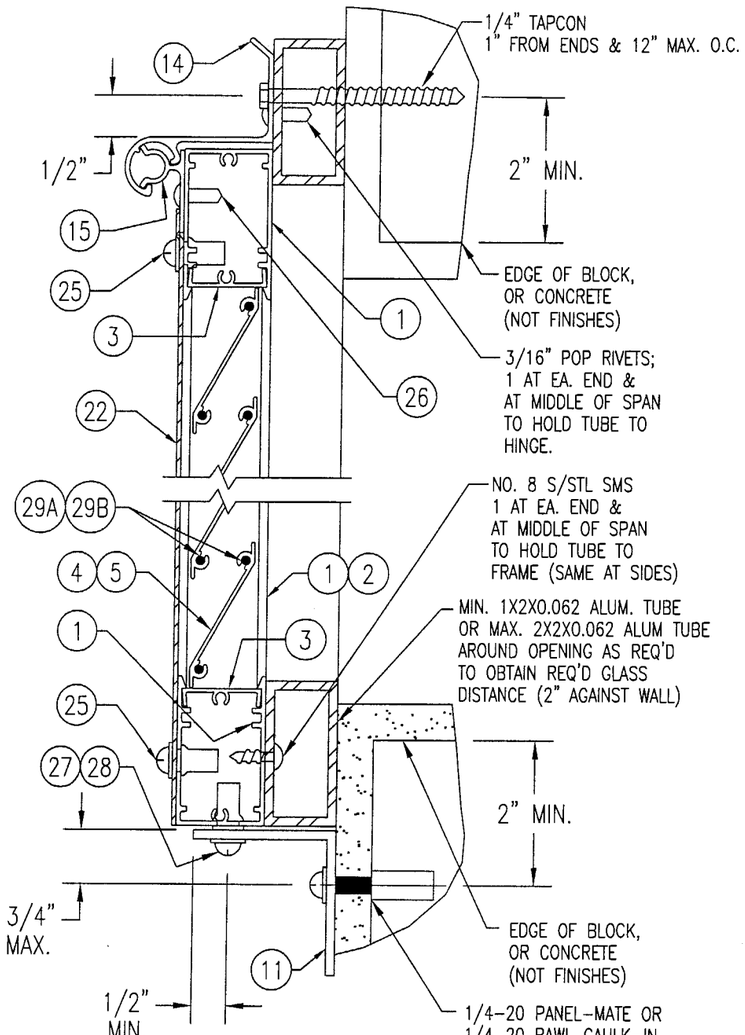

SECTION A/3
SCALE: 1/2 FULL
(BUILD-OUT MOUNT ONTO BLOCK/CONCRETE)

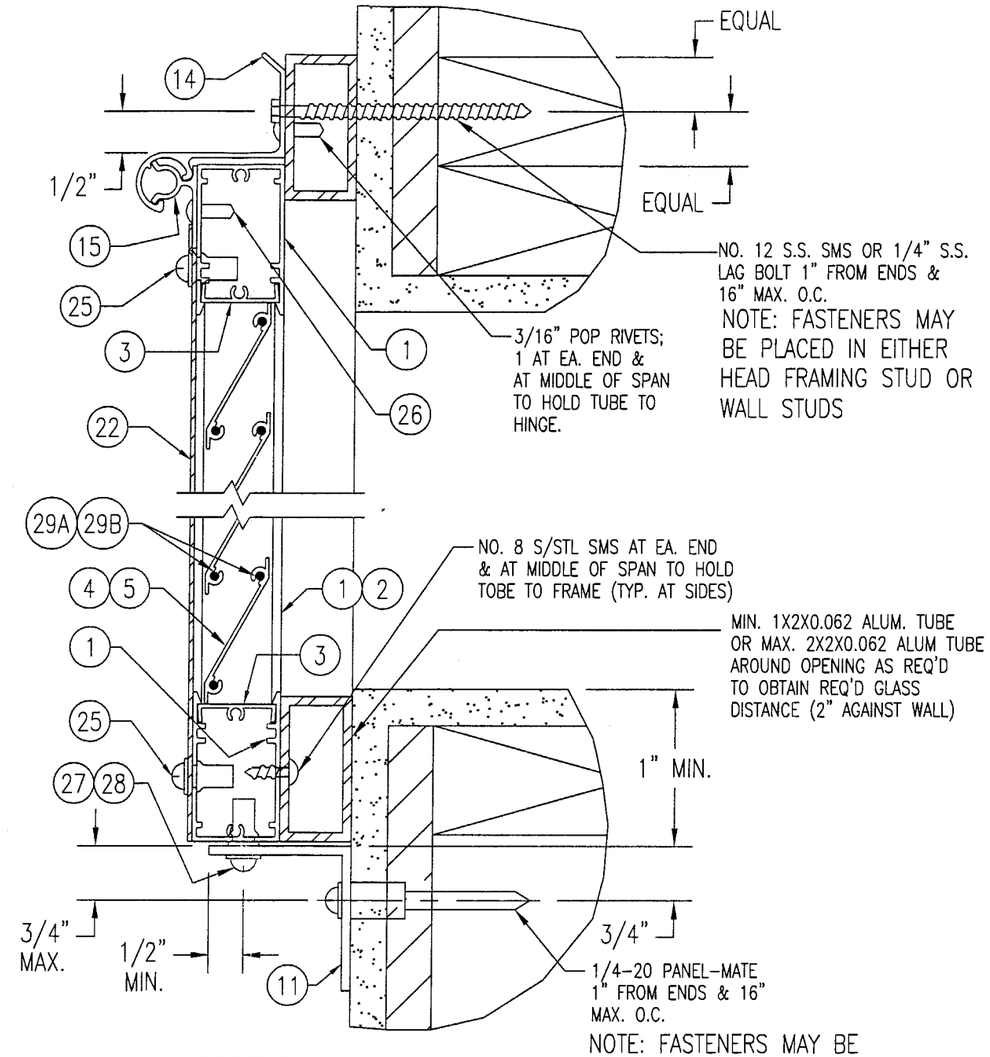

SECTION A/3
SCALE: 1/2 FULL
(BUILD-OUT MOUNT ONTO WOOD FRAME)

FOR FASTENER EDGE DISTANCE & SPACING REQUIREMENTS, SEE SHEET 2.

PRODUCT REVISED
as complying with the Florida Building Code
Acceptance No 04-0130.03
Expiration Date 03/08/2009
By Helena A. Melo
Miami Dade Product Control Division

DRAWN BY: W.W.S.	CHECKED BY: W.W.S.
PLOT: 1=2	DATE: 11/17/00

NO.	REVISION DESCRIPTION	BY	DATE

(DADE)

DRAWING TITLE
IMPACT BAHAMA SHUTTERS

MANUFACTURER
FLORIDA SHUTTERS, INC.
1055 COMMERCE AVENUE
VERO BEACH, FL 32960
(772) 569-2200

CONSULTANTS
W. W. SCHAEFER ENGINEERING & CONSULTING, P.A.
8895 N. MILITARY TRAIL; SUITE C-204
PALM BEACH GARDENS, FL 33410
PHONE: 561-775-4902 FAX: 561-775-4903

CERTIFICATION
MAR 18 2004
WARREN W. SCHAEFER, P.E.
P.E. NO. 44135

DRAWING NO. 1001A
REV.
SHEET NO. 3 OF 10

NOTE:
THE ARMS MAY BE MOUNTED ON THE WALL ABOVE THE SILL LEVEL PROVIDING THE ARMS ANGLE TO THE HORIZONTAL DOES NOT EXCEED 30 DEGREES.

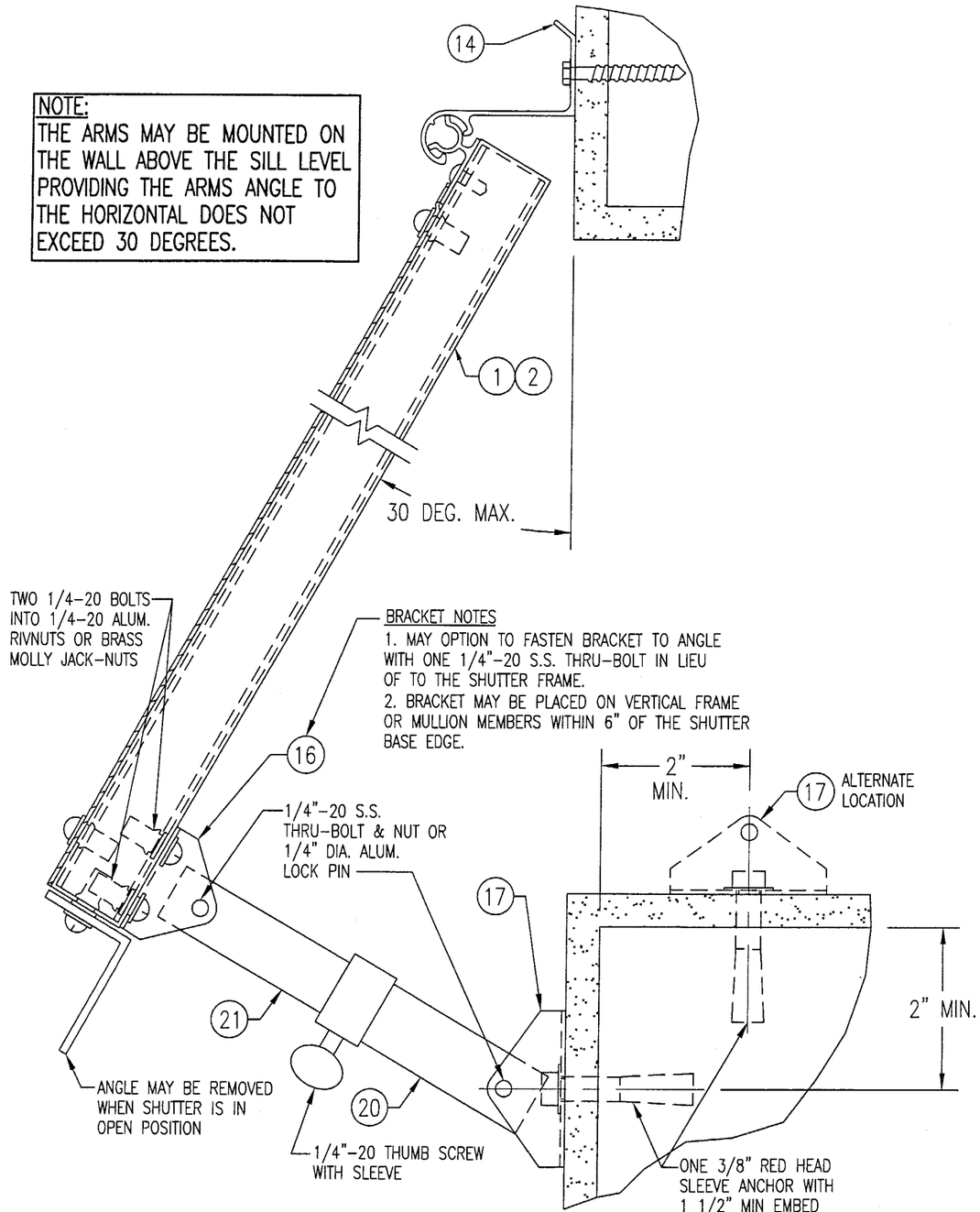

BRACKET NOTES
1. MAY OPTION TO FASTEN BRACKET TO ANGLE WITH ONE 1/4"-20 S.S. THRU-BOLT IN LIEU OF TO THE SHUTTER FRAME.
2. BRACKET MAY BE PLACED ON VERTICAL FRAME OR MULLION MEMBERS WITHIN 6" OF THE SHUTTER BASE EDGE.

SECTION B/4
SCALE: 1/2 FULL
(OPEN SHUTTER AT FACE MOUNT CONDITION TO BLOCK/CONCRETE)
SEE "ARM SPACING TABLE" ON SHEET 1 FOR SPACING OF ARMS

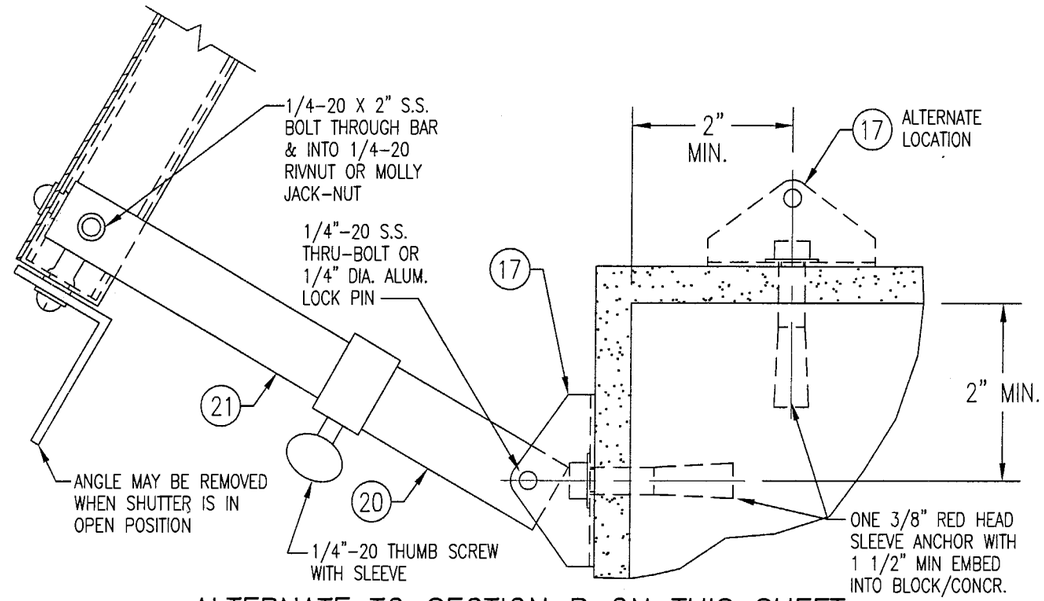

ALTERNATE TO SECTION B ON THIS SHEET
(END ARMS ONLY)

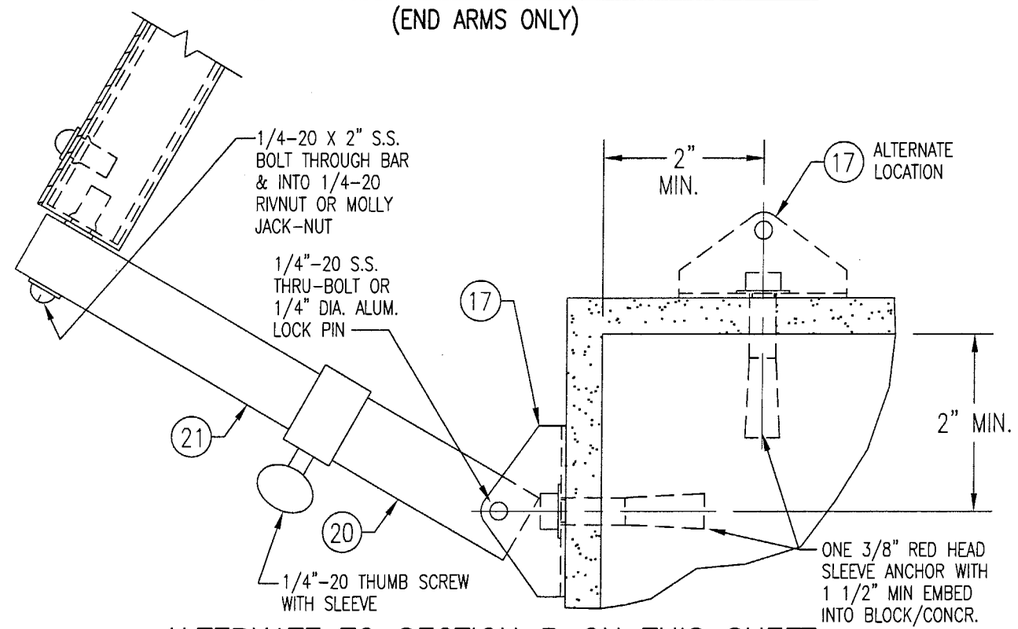

ALTERNATE TO SECTION B ON THIS SHEET

FOR FASTENER EDGE DISTANCE & SPACING REQUIREMENTS, SEE SHEET 2.

PRODUCT REVISED
as complying with the Florida Buiding Code
Acceptance No 04-0130.03
Expiration Date 03/08/2009
By Helena A. Molina
Miami Dade Product Control Division

DRAWN BY: W.W.S.	CHECKED BY: W.W.S.
PLOT: 1=2	DATE: 11/17/00

NO.	REVISION DESCRIPTION	BY	DATE

(DADE)

MANUFACTURER
FLORIDA SHUTTERS, INC.
1055 COMMERCE AVENUE
VERO BEACH, FL 32960
(772) 569-2200

DRAWING TITLE
IMPACT BAHAMA SHUTTERS

CONSULTANTS
W. W. SCHAEFER ENGINEERING & CONSULTING, P.A.
8895 N. MILITARY TRAIL; SUITE C-204
PALM BEACH GARDENS, FL 33410
PHONE: 561-775-4902 FAX: 561-775-4903

CERTIFICATION
MAR 18 2004
WARREN W. SCHAEFER, P.E.
P.E. NO. 44135

DRAWING NO. 1001A
REV.
SHEET NO. 4 OF 10

NOTE:
THE ARMS MAY BE MOUNTED ON THE WALL ABOVE THE SILL LEVEL PROVIDING THE ARMS ANGLE TO THE HORIZONTAL DOES NOT EXCEED 30 DEGREES.

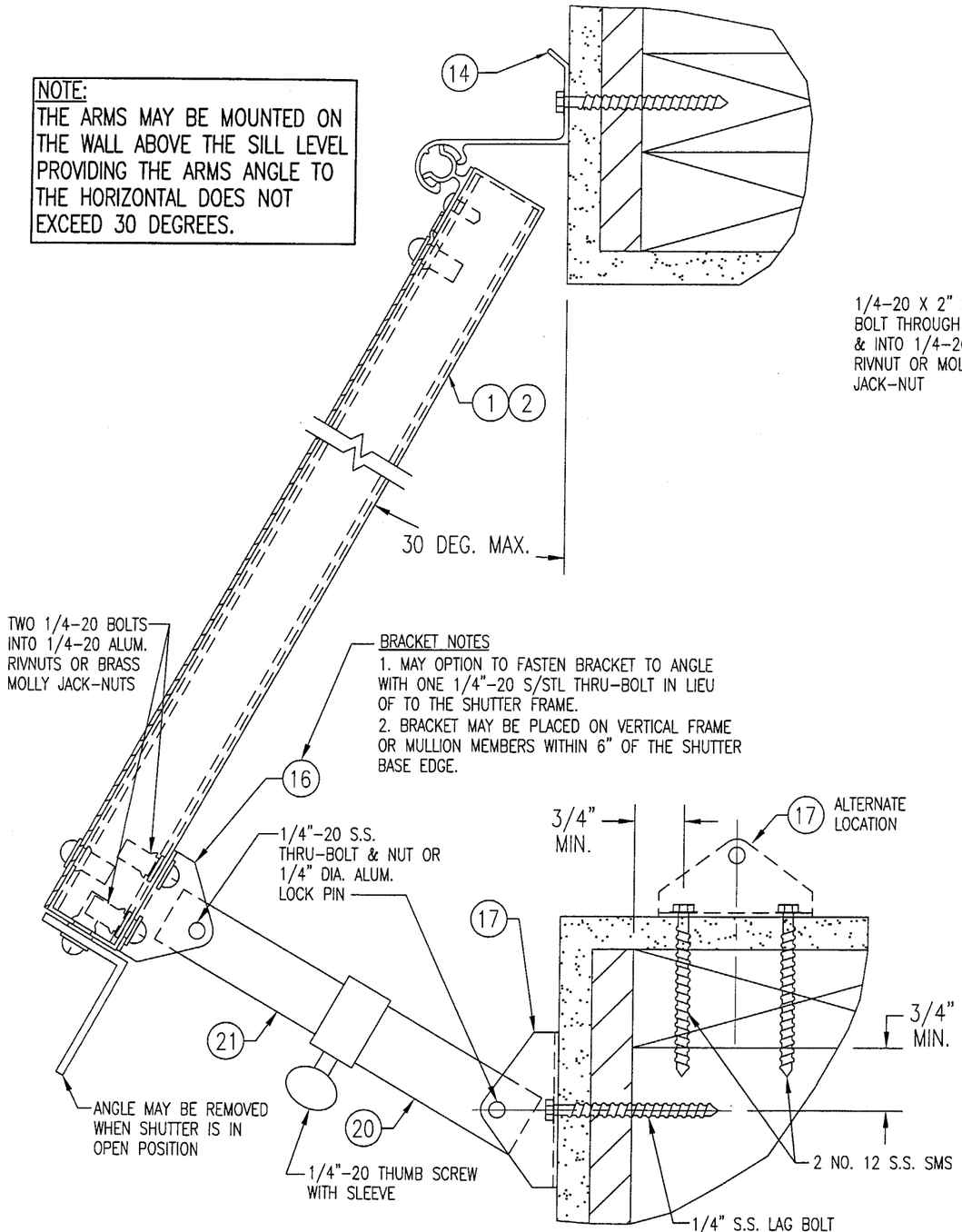

BRACKET NOTES
1. MAY OPTION TO FASTEN BRACKET TO ANGLE WITH ONE 1/4"-20 S/STL THRU-BOLT IN LIEU OF TO THE SHUTTER FRAME.
2. BRACKET MAY BE PLACED ON VERTICAL FRAME OR MULLION MEMBERS WITHIN 6" OF THE SHUTTER BASE EDGE.

SECTION B/5
SCALE: 1/2 FULL
(OPEN SHUTTER AT FACE MOUNT CONDITION TO WOOD FRAMING)
SEE "ARM SPACING TABLE" ON SHEET 1 FOR SPACING OF ARMS

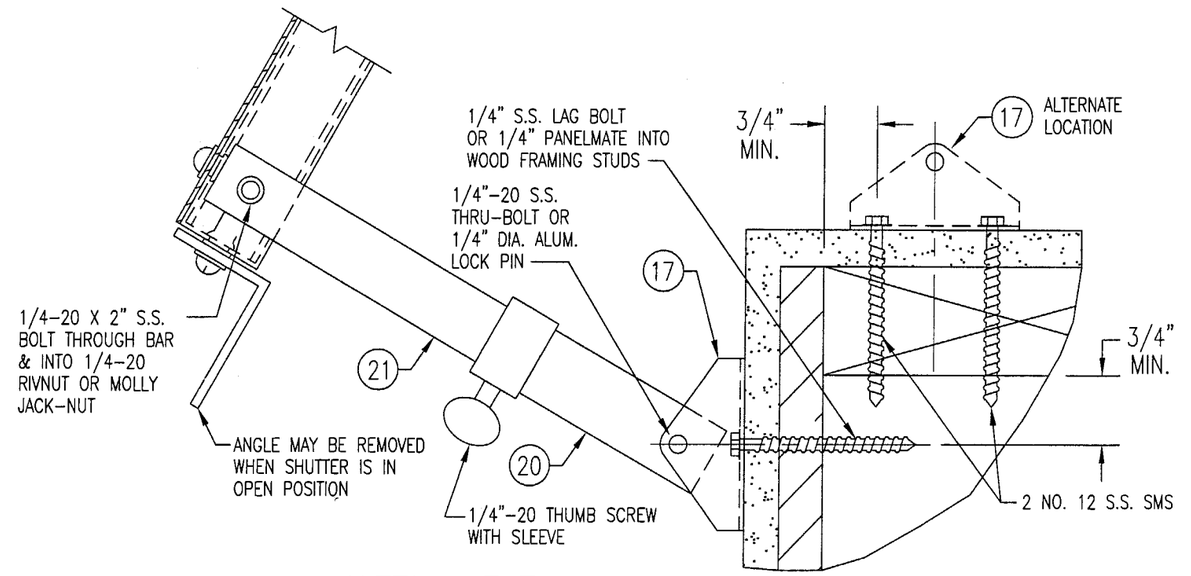

ALTERNATE TO SECTION B ON THIS SHEET (END ARMS ONLY)
SEE "ARM SPACING TABLE" ON SHEET 1 FOR SPACING OF ARMS

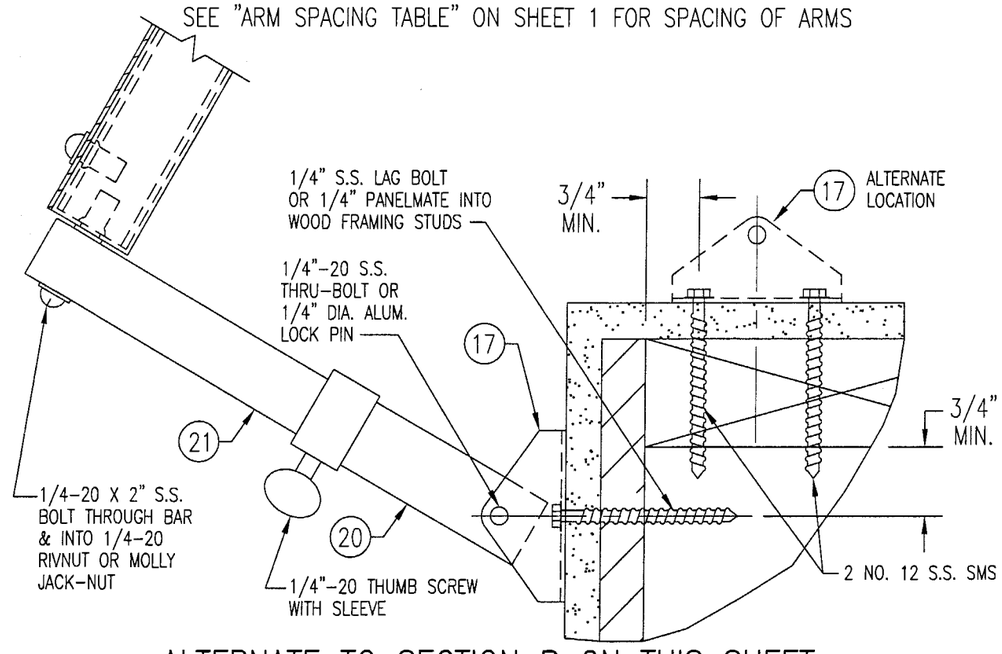

ALTERNATE TO SECTION B ON THIS SHEET
SEE "ARM SPACING TABLE" ON SHEET 1 FOR SPACING OF ARMS

FOR FASTENER EDGE DISTANCE & SPACING REQUIREMENTS, SEE SHEET 2.

PRODUCT REVISED
as complying with the Florida Buiding Code
Acceptance No 04-0130.03
Expiration Date 03/08/2009
By [signature]
Miami Dade Product Control Division

DRAWN BY: W.W.S.	CHECKED BY: W.W.S.
PLOT: 1=2	DATE: 11/17/00

NO.	REVISION DESCRIPTION	BY	DATE

(DADE)

MANUFACTURER
FLORIDA SHUTTERS, INC.
1055 COMMERCE AVENUE
VERO BEACH, FL 32960
(772) 569-2200

DRAWING TITLE
IMPACT BAHAMA SHUTTERS

CONSULTANTS
W. W. SCHAEFER ENGINEERING & CONSULTING, P.A.
8895 N. MILITARY TRAIL; SUITE C-204
PALM BEACH GARDENS, FL 33410
PHONE: 561-775-4902 FAX: 561-775-4903

CERTIFICATION
MAR 18 2004
WARREN W. SCHAEFER, P.E.
P.E. NO. 44135

DRAWING NO. 1001A
REV.
SHEET NO. 5 OF 10

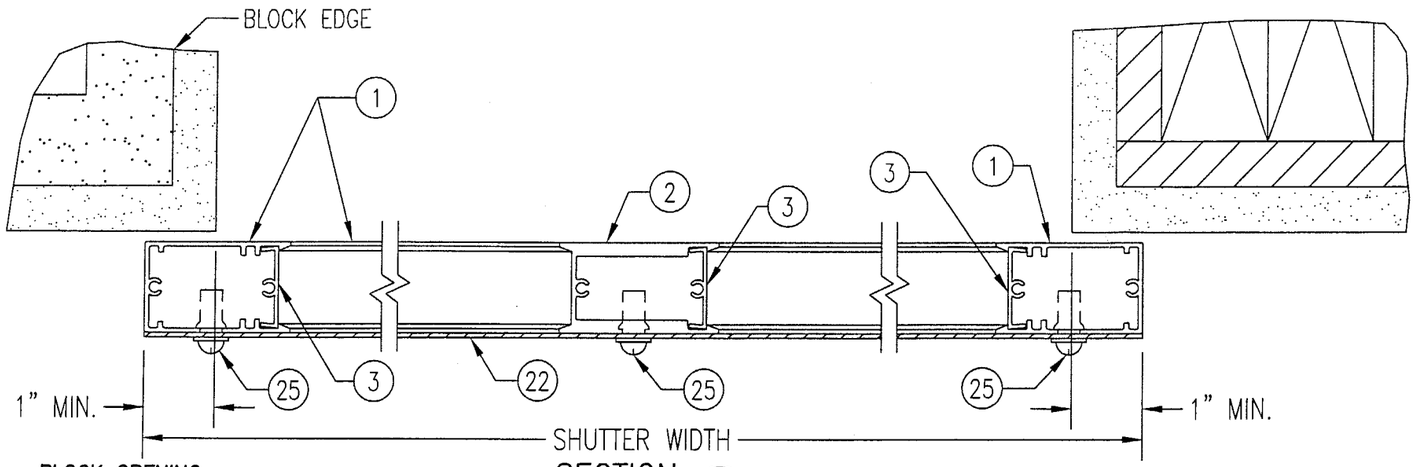

SECTION C/6 FLUSH MOUNT
SCALE: 1/3 FULL
STORM BAR & ARMS NOT SHOWN FOR CLARITY!
3 & 4 PANEL SHUTTERS SIMILAR

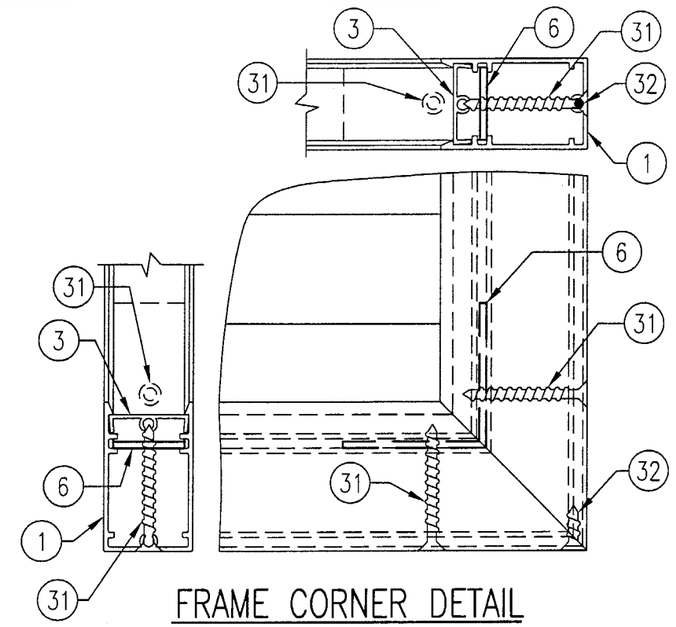

FRAME CORNER DETAIL
SCALE: 1/2 FULL

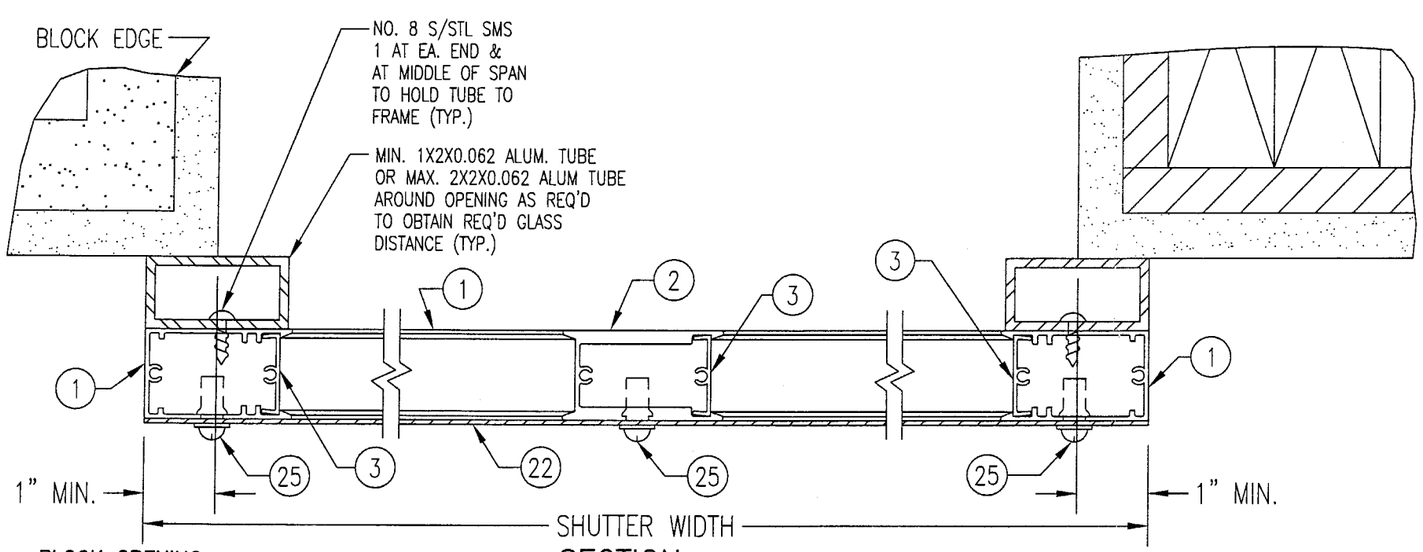

SECTION C/6 BUILD-OUT
SCALE: 1/3 FULL
STORM BAR & ARMS NOT SHOWN FOR CLARITY!
3 & 4 PANEL SHUTTERS SIMILAR

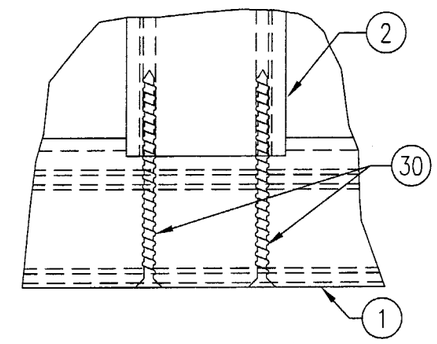

MULLION END CONNECTION DETAIL
SCALE: 1/2 FULL

PRODUCT REVISED
as complying with the Florida Buiding Code
Acceptance No 04-0130.03
Expiration Date 03/08/2009
By Helena A. Heler
Miami Dade Product Control Division

DRAWN BY: W.W.S.	CHECKED BY: W.W.S.
PLOT: 1=2	DATE: 11/17/00

NO.	REVISION DESCRIPTION	BY	DATE

(DADE)

DRAWING TITLE
IMPACT BAHAMA SHUTTERS

MANUFACTURER
FLORIDA SHUTTERS, INC.
1055 COMMERCE AVENUE
VERO BEACH, FL 32960
(772) 569-2200

CONSULTANTS
W. W. SCHAEFER ENGINEERING & CONSULTING, P.A.
8895 N. MILITARY TRAIL; SUITE C-204
PALM BEACH GARDENS, FL 33410
PHONE: 561-775-4902 FAX: 561-775-4903

CERTIFICATION
MAR 18 2004
WARREN W. SCHAEFER, P.E.
P.E. NO. 44135

DRAWING NO. 1001A
REV.
SHEET NO. 6 OF 10

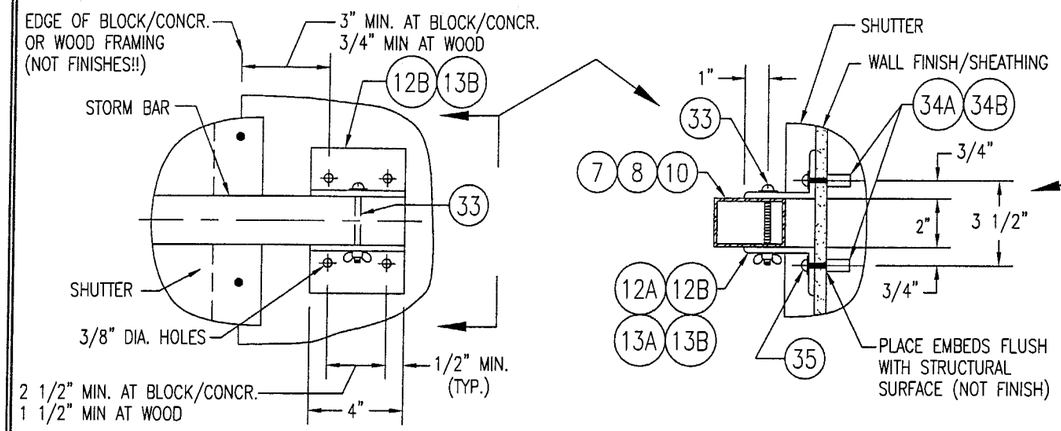

STORM BAR END CONNECTION "A"

SCALE: 2"=1'-0"

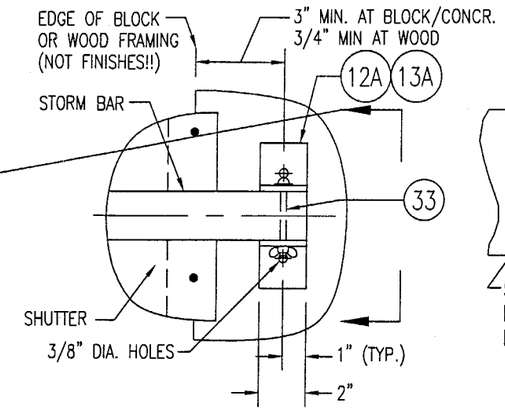

STORM BAR END CONNECTION "B"

SCALE: 2"=1'-0"

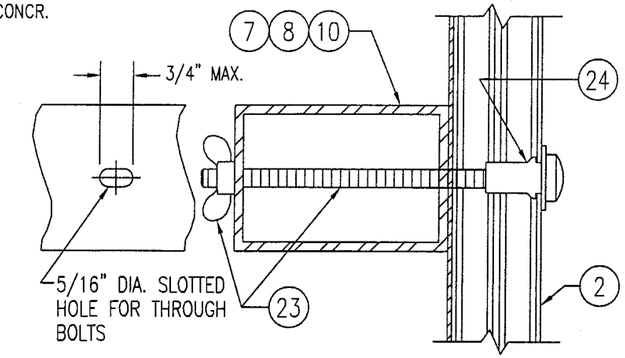

STORM BAR TO MULLION CONNECTION DETAIL

SCALE: 1/2 FULL

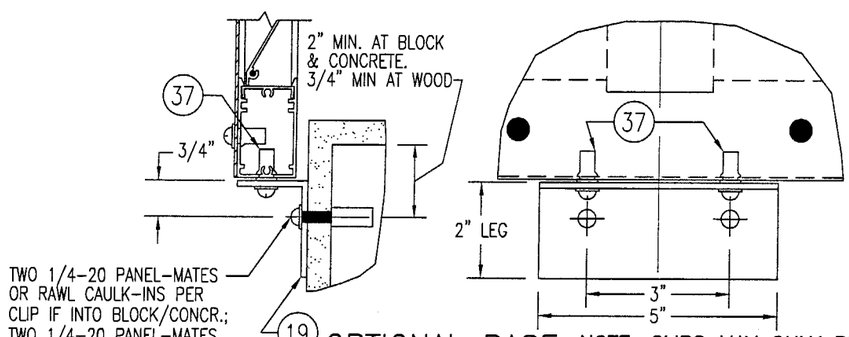

OPTIONAL BASE CLIP DETAIL 1

NOTE: CLIPS MAY ONLY BE USED WITH WOOD FRAMING IF ATTACHED TO A CONTINUOUS SILL MEMBER

PLACE 1 CLIP AT EACH CORNER & MULLION LOCATION

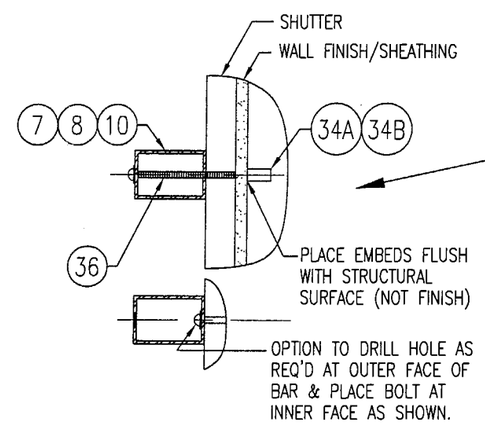

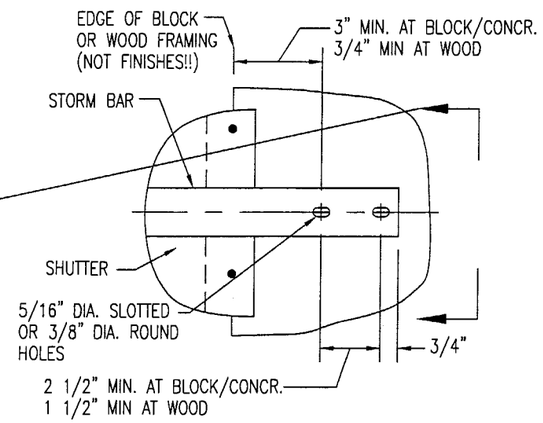

STORM BAR END CONNECTION "C"

SCALE: 2"=1'-0"

PRODUCT REVISED
as complying with the Florida Buiding Code
Acceptance No 04-0130.03
Expiration Date 03/08/2009
By [signature]
Miami Dade Product Control Division

DRAWN BY: W.W.S.	CHECKED BY: W.W.S.
PLOT: 1=3	DATE: 11/17/00

NO.	REVISION DESCRIPTION	BY	DATE

(DADE)

DRAWING TITLE
IMPACT BAHAMA SHUTTERS

MANUFACTURER
FLORIDA SHUTTERS, INC.
1055 COMMERCE AVENUE
VERO BEACH, FL 32960
(772) 569-2200

CONSULTANTS
W. W. SCHAEFER ENGINEERING & CONSULTING, P.A.
8895 N. MILITARY TRAIL; SUITE C-204
PALM BEACH GARDENS, FL 33410
PHONE: 561-775-4902 FAX: 561-775-4903

CERTIFICATION
MAR 18 2004
WARREN W. SCHAEFER, P.E.
P.E. NO. 44135

DRAWING NO. 1001A
REV.
SHEET NO. 7 OF 10

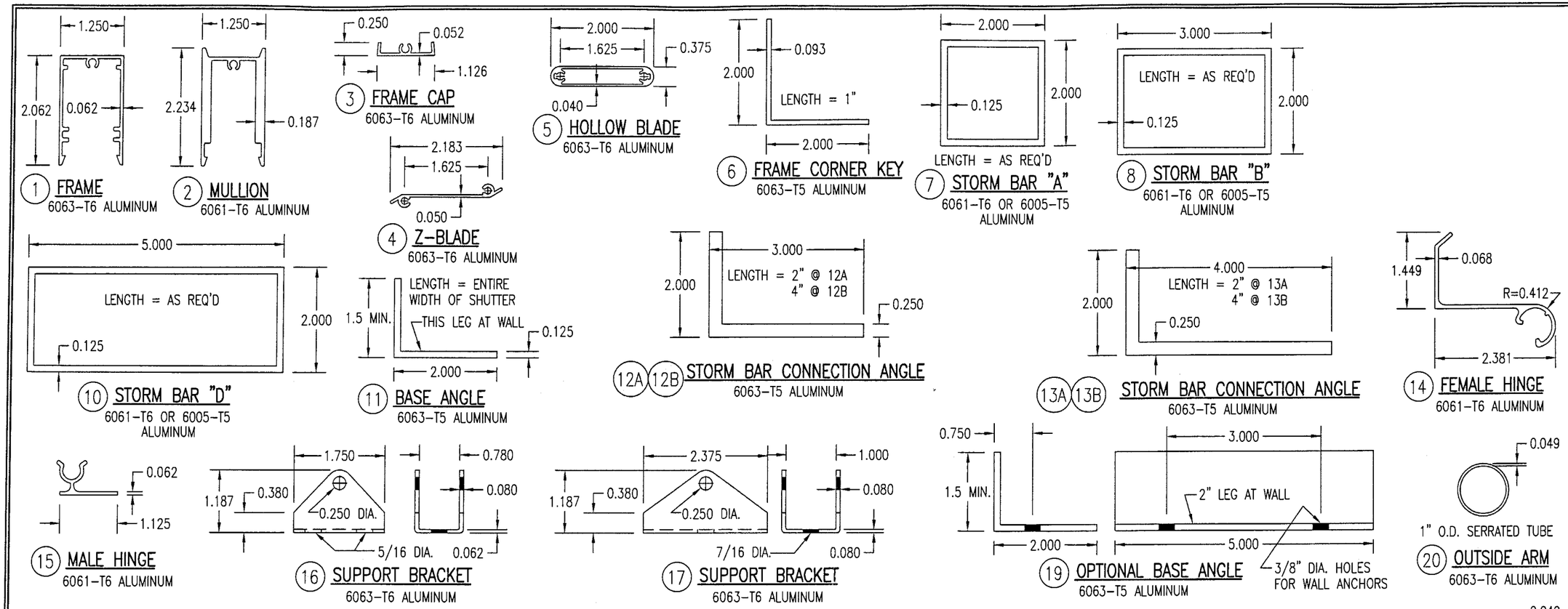

MATERIAL LIST

NO.	DESCRIPTION	NOTES
1	SHUTTER FRAME	6063-T6 ALUMINUM
2	MULLION	6061-T6 ALUMINUM
3	FRAME CAP	6063-T6 ALUMINUM
4	Z-BLADE	6063-T6 ALUMINUM
5	HOLLOW BLADE	6063-T6 ALUMINUM
6	L2X2X0.093 FRAME CORNER KEY	6063-T5 ALUMINUM; PLACED AT EA. FRAME CORNER
7	TS2X2X1/8 STORM BAR	6061-T6 OR 6005-T5 ALUMINUM
8	TS3X2X1/8 STORM BAR	6061-T6 OR 6005-T5 ALUMINUM
9	OPEN	
10	TS5X2X1/8 STORM BAR	6061-T6 OR 6005-T5 ALUMINUM
11	L2XMINIMUM1.5X1/8 CONT. BASE ANGLE	6063-T5 ALUMINUM; SECURES SHUTTERS CLOSED
12A	L3X2X1/4 STORM BAR END CONNECTOR	6063-T5 ALUMINUM; 2" LONG; USED WITH-OUT BUILD-OUT
12B	L3X2X1/4 STORM BAR END CONNECTOR	6063-T5 ALUMINUM; 4" LONG; USED WITH-OUT BUILD-OUT
13A	L4X2X1/4 STORM BAR END CONNECTOR	6063-T5 ALUMINUM; 2" LONG; USED WITH BUILD-OUT
13B	L4X2X1/4 STORM BAR END CONNECTOR	6063-T5 ALUMINUM; 4" LONG; USED WITH BUILD-OUT
14	FEMALE TOP HINGE	6061-T6 ALUMINUM; FULL WIDTH OF SHUTTER
15	MALE TOP HINGE	6061-T6 ALUMINUM; FULL WIDTH OF SHUTTER
16	SHUTTER ARM SUPPORT BRACKET	6063-T6 ALUMINUM; ARM TO SHUTTER BRACKET
17	SHUTTER ARM SUPPORT BRACKET	6063-T6 ALUMINUM; ARM TO WALL BRACKET
18	OPEN	

NO.	DESCRIPTION	NOTES
19	L2XMINIMUM1.5X1/8 BASE ANGLE 5" LONG	6063-T5 ALUMINUM; 1 AT EA. VERTICAL SHUTTER MEMBER
20	OUTER PORTION OF SHUTTER ARM	6063-T6 ALUMINUM
21	INNER PORTION OF SHUTTER ARM	6063-T6 ALUMINUM
22	0.050" THICK ALUMINUM HURRICANE SHEET	3003-H14 ALUM.; MIN. SEAM OVERLAPS = 2" @ MULLIONS
23	1/4" STL BOLT OR THREADED ROD W/WING NUT	STORM BAR TO SHUTTER MULLIONS
24	1/4" MOLLY JACK NUT OR 6061-T6 RIVNUT	FOR SETTING OF NO. 23 ABOVE INTO MULLIONS
25	1/4-20 S/STL BOLTS & 6061-T6 RIVNUTS	AT FRAME CORNERS & 12" MAX. O.C. (SHEET TO SHUTTER)
26	3/16" 5052 ALUMINUM POP RIVETS	1" FROM HINGE ENDS & 6" MAX. O.C. (TOP HINGE TO SHUTTER)
27	3/16" 5052 ALUMINUM POP RIVETS	1" FROM ANGLE ENDS & 6" MAX. O.C. (BASE ANGLE TO SHUTTER)
28	1/4-20 S/STL BOLTS & 6061-T6 RIVNUTS	1" FROM ENDS & 12" MAX. O.C. (BASE ANGLE TO SHUTTER)
29A	NO. 6 X 5/8" S/STL P.H. SMS	SECURES Z-BLADE END TO FRAME CAP (2 PER BLADE END)
29B	NO. 8 X 5/8" S/STL P.H. SMS	SECURES HOLLOW BLADE END TO FRAME CAP (2 PER BLADE END)
30	NO. 8 X 3" S/STL F.H. SMS	2 PER MULLION END THROUGH FRAME
31	NO. 6 X 1 3/4" S/STL F.H. SMS	2 PER FRAME CORNER INTO CORNER KEY
32	NO. 6 X 5/8" S/STL F.H. SMS	1 PER FRAME CORNER INTO FRAME SCREW BOSS
33	1/4" X MIN. 3" STL. BOLT W/WING NUT	1 PER STORM BAR END THROUGH END ANGLES & BAR
34A	1/4-20 RAWL CAULK-IN	EMBED FULL ANCHOR BODY INTO BLOCK/CONCR.
34B	1/4-20 MALE OR FEMALE PANEL MATE	EMBED 1 1/2" INTO WOOD & MIN. 1 1/4" INTO BLOCK
35	1/4" STL BOLT OR THREADED ROD W/ WINGNUT	ANCHORS STORM BAR ENDS TO WALL ANCHORS
36	1/4-20 STEEL BOLT	ANCHORS STORM BAR END CLIPS TO WALL ANCHORS
37	1/4-20 S/STL BOLTS & 6061-T6 RIVNUTS	2 PER BASE CLIP INTO SHUTTER FRAME

NOTE: ALL DETAILS ARE DRAWN TO 1/2 FULL SIZE UNLES NOTED OTHERWISE.

PRODUCT REVISED
as complying with the Florida Building Code
Acceptance No 04-0130.03
Expiration Date 03/08/2009
By Helmy A. Malak
Miami Dade Product Control Division

DRAWN BY: W.W.S.	CHECKED BY: W.W.S.
PLOT: 1=2	DATE: 11/17/00

NO.	REVISION DESCRIPTION	BY	DATE

(DADE)

DRAWING TITLE
IMPACT BAHAMA SHUTTERS

MANUFACTURER
FLORIDA SHUTTERS, INC.
1055 COMMERCE AVENUE
VERO BEACH, FL 32960
(772) 569-2200

CONSULTANTS
W. W. SCHAEFER ENGINEERING & CONSULTING, P.A.
8895 N. MILITARY TRAIL; SUITE C-204
PALM BEACH GARDENS, FL 33410
PHONE: 561-775-4902 FAX: 561-775-4903

CERTIFICATION
MAR 18 2004
WARREN W. SCHAEFER, P.E.
P.E. NO. 44135

DRAWING NO. 1001A
REV.

SHEET NO. 8 OF 10

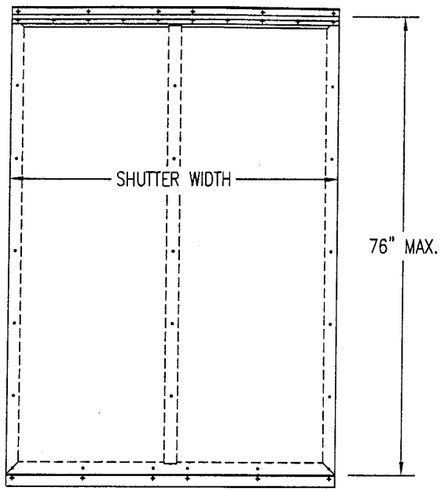

NO BARS
(SINGLE SPAN SHUTTER)

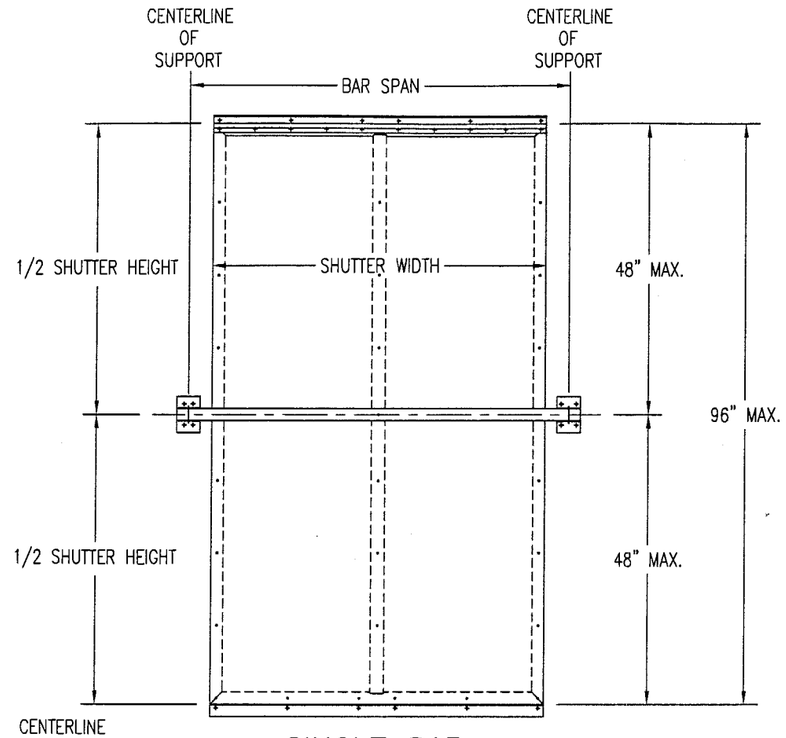

SINGLE BAR
(TWO SPAN SHUTTER)

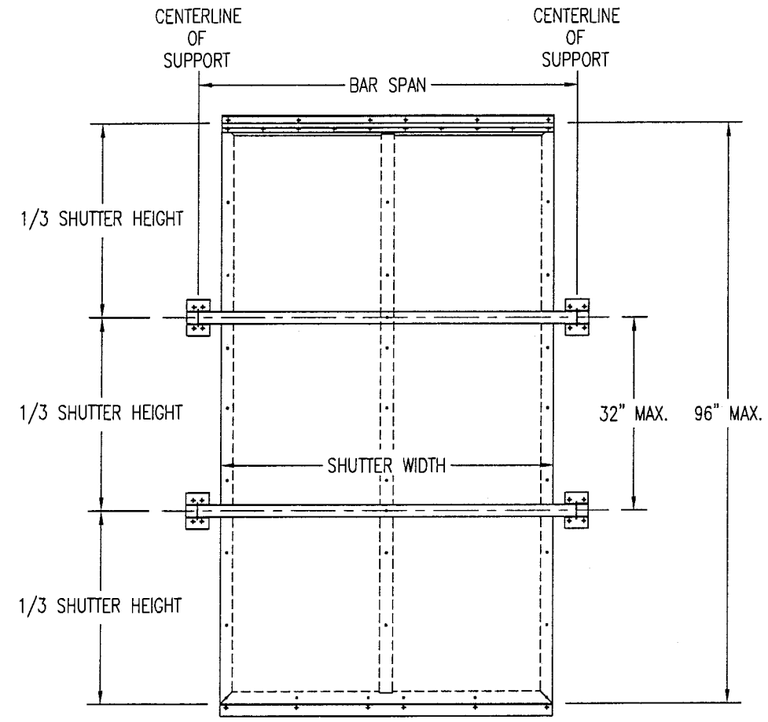

TWO BARS
(THREE SPAN SHUTTER)

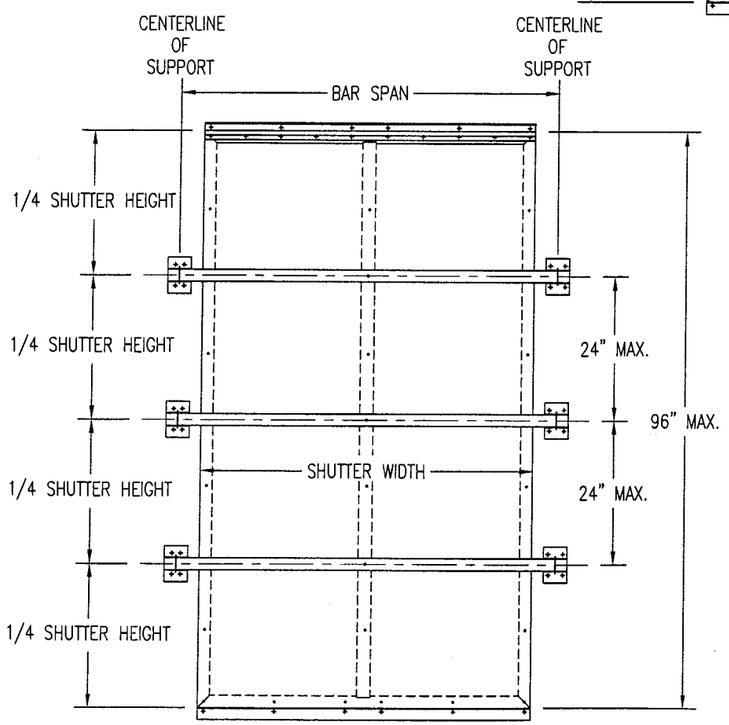

THREE BARS
(FOUR SPAN SHUTTER)

ALLOWABLE PRESSURE TABLE FOR SINGLE SPAN SHUTTERS		
SHUTTER HEIGHT	PRESSURE (PSF)	
	POS	NEG
60" & LESS	80.0	80.0
62"	73.0	76.2
64"	64.3	71.7
66"	56.9	67.4
68"	50.5	63.5
70"	44.9	58.8
72"	40.1	52.5
74"	36.0	46.3
76"	32.3	40.0

NOTE:

1. ALL SHUTTERS MUST BE PLACED A MIN. DISTANCE OF 2.25" AWAY FROM THE GLASS.

PRODUCT REVISED
as complying with the Florida Building Code
Acceptance No 04-0130.03
Expiration Date 03/08/2009
By Helmy A. Melar
Miami Dade Product Control Division

DRAWN BY: W.W.S.	CHECKED BY: W.W.S.
PLOT: 1=24	DATE: 11/17/00

NO.	REVISION DESCRIPTION	BY	DATE

DRAWING TITLE
IMPACT BAHAMA SHUTTERS (DADE)

MANUFACTURER
FLORIDA SHUTTERS, INC.
1055 COMMERCE AVENUE
VERO BEACH, FL 32960
(772) 569-2200

CONSULTANTS
W. W. SCHAEFER ENGINEERING & CONSULTING, P.A.
8895 N. MILITARY TRAIL; SUITE C-204
PALM BEACH GARDENS, FL 33410
PHONE: 561-775-4902 FAX: 561-775-4903

CERTIFICATION
MAR 18 2004
WARREN W. SCHAEFER, P.E.
P.E. NO. 44135

DRAWING NO. 1001A
REV.
SHEET NO. 9 OF 10

PRESSURE LOAD TABLE FOR STORM BARS & BAR END CONNECTIONS

SHUTTER WIDTH (IN)	BAR SPACING (IN)	ALLOWABLE PRESSURES (PSF) AS CONTROLLED BY BARS			ALLOWABLE PRESSURE (PSF) AS CONTROLLED BY CONNECTIONS		
					CONN "A"	CONN "B" & "C"	
		TS2X2X1/8	TS3X2X1/8	TS5X2X1/8	WOOD/CONC./BLOCK	WOOD	BLOCK/CONC
36	42	80	80	80	80	80	80
	48	80	80	80	80	80	70
42	36	80	80	80	80	80	80
	42	80	80	80	80	80	69
	48	80	80	80	80	80	60
48	30	80	80	80	80	80	80
	36	80	80	80	80	80	70
	42	80	80	80	80	80	60
	48	70	80	80	80	70	53
54	30	80	80	80	80	80	75
	36	71	80	80	80	80	62
	42	61	80	80	80	71	53
	48	54	80	80	80	62	47
60	24	75	80	80	80	80	80
	30	60	80	80	80	80	67
	36	50	80	80	80	75	56
	42	43	80	80	80	64	48
	48	37	80	80	80	56	42
66	24	54	80	80	80	80	77
	30	33	80	80	80	80	61
	36	36	80	80	80	68	51
	42	31	80	80	80	58	44
	48	27	73	80	79	51	38
72	24	40	80	80	80	80	70
	30	32	80	80	80	75	56
	36	27	72	80	80	62	47
	42	–	61	80	80	53	40
	48	–	54	80	73	47	35
78	24	30	80	80	80	80	65
	30	–	65	80	80	69	52
	36	–	54	80	80	57	43
	42	–	46	80	77	49	37
	48	–	41	80	67	43	32
84	24	–	62	80	80	80	60
	30	–	50	80	80	64	48
	36	–	42	80	80	53	40
	42	–	36	80	71	46	34
	48	–	31	80	62	40	30
90	24	–	49	80	80	75	56
	30	–	39	80	80	60	45
	36	–	32	80	77	50	37
	42	–	28	80	66	43	32
	48	–	–	80	58	37	28

1. ALL PRESSURES ARE FOR BOTH POSITIVE & NEGATIVE AND ARE PSF.
2. REF. SHEET 7 FOR CONNECTION TYPES.

PRESSURE LOAD TABLE FOR STORM BARS & BAR END CONNECTIONS

SHUTTER WIDTH (IN)	BAR SPACING (IN)	ALLOWABLE PRESSURES (PSF) AS CONTROLLED BY BARS			ALLOWABLE PRESSURE (PSF) AS CONTROLLED BY CONNECTIONS		
					CONN "A"	CONN "B" & "C"	
		TS2X2X1/8	TS3X2X1/8	TS5X2X1/8	WOOD/CONC./BLOCK	WOOD	BLOCK/CONC
96	24	–	39	80	80	70	53
	30	–	31	80	80	56	42
	36	–	26	80	73	47	35
	42	–	–	80	62	40	30
	48	–	–	70	54	35	26
102	24	–	31	80	80	66	50
	30	–	25	80	80	53	40
	36	–	–	75	68	44	33
	42	–	–	64	59	38	28
	48	–	–	56	51	33	–
108	24	–	–	80	80	62	47
	30	–	–	73	77	50	37
	36	–	–	61	64	41	31
	42	–	–	52	55	36	27
	48	–	–	46	48	31	–
112	24	–	–	80	80	60	45
	30	–	–	64	75	48	36
	36	–	–	53	62	40	30
	42	–	–	46	53	34	26
	48	–	–	40	47	30	–

LOAD TABLE INSTRUCTIONS:

1. SELECT AN OVERALL SHUTTER SIZE (TOTAL WIDTH & HEIGHT).
2. DETERMINE THE REQUIRED DESIGN WIND PRESSURE FOR THE SHUTTER (OBTAIN FROM A FLORIDA REGISTERED ENGINEER).
3. IF THE SHUTTER HEIGHT IS LESS THAN OR EQUAL TO 76", GO TO "PRESSURE TABLE FOR SINGLE SPAN SHUTTERS" ON SHEET 9 AND COMPARE THE REQUIRED DESIGN PRESSURE TO THE ALLOWABLE PRESSURES IN THE TABLE. IF ALLOWABLE PRESSURE IS EQUAL TO OR GREATER THAN THAT REQUIRED, NO BAR IS REQUIRED & YOU ARE FINISHED. IF ALLOWABLE PRESSURE IS LESS THAN REQUIRED, STORM BAR(S) ARE NEEDED, SO CONTINUE TO NUMBER 4 BELOW.
4. IF BARS ARE REQUIRED, GO TO LOAD TABLES ON THIS SHEET.
5. GO TO APPLICABLE SHUTTER WIDTH IN TABLE AND CHOOSE THE DESIRED BAR SPACING.
6. GO ACROSS THE TABLE AND CHOOSE THE BAR AND CONNECTION WHO'S ALLOWABLE PRESSURE IS GREATER THAN OR EQUAL TO THE REQUIRED PRESSURE. IF THE DESIRED BAR AND/OR CONNECTION TYPE DOES NOT MEET THE REQUIRED SHUTTER DESIGN PRESSURE, CHOOSE ANOTHER BAR SPACING AND CHECK THE BAR TYPE & CONNECTION AGAIN. REPEAT UNTIL DESIRED & CORRECT BAR & CONNECTION TYPE ARE DETERMINED (NOTE THAT THE LESSER PRESSURE OF THE BAR, CONNECTION TYPE, OR MAXIMUM ALLOWABLE OF +/–80 PSF SHALL CONTROL THE SHUTTER).

PRODUCT REVISED
as complying with the Florida Buiding Code
Acceptance No 04-0130.03
Expiration Date 03/08/2009
By
Miami Dade Product Control Division

DRAWN BY: W.W.S.	CHECKED BY: W.W.S.
PLOT: 1=1	DATE: 11/17/00

NO.	REVISION DESCRIPTION	BY	DATE

(DADE)

DRAWING TITLE
IMPACT BAHAMA SHUTTERS

MANUFACTURER
FLORIDA SHUTTERS, INC.
1055 COMMERCE AVENUE
VERO BEACH, FL 32960
(772) 569-2200

CONSULTANTS
W. W. SCHAEFER ENGINEERING & CONSULTING, P.A.
8895 N. MILITARY TRAIL; SUITE C-204
PALM BEACH GARDENS, FL 33410
PHONE: 561-775-4902 FAX: 561-775-4903

CERTIFICATION
MAR 18 2004
WARREN W. SCHAEFER, P.E.
P.E. NO. 44135

DRAWING NO. 1001A
REV.
SHEET NO. 10 OF 10