MIAMI-DADE

BUILDING CODE COMPLIANCE OFFICE (BCCO)
PRODUCT CONTROL DIVISION

MIAMI-DADE COUNTY, FLORIDA
METRO-DADE FLAGLER BUILDING
140 WEST FLAGLER STREET, SUITE 1603
MIAMI, FLORIDA 33130-1563
(305) 375-2901 FAX (305) 375-2908

NOTICE OF ACCEPTANCE (NOA)

PGT Industries
P.O. Box 1529
Nokomis, FL 34274

SCOPE:

This NOA is being issued under the applicable rules and regulations governing the use of construction materials. The documentation submitted has been reviewed by Miami-Dade County Product Control Division and accepted by the Board of Rules and Appeals (BORA) to be used in Miami Dade County and other areas where allowed by the Authority Having Jurisdiction (AHJ).

This NOA shall not be valid after the expiration date stated below. The Miami-Dade County Product Control Division (In Miami Dade County) and/or the AHJ (in areas other than Miami Dade County) reserve the right to have this product or material tested for quality assurance purposes. If this product or material fails to perform in the accepted manner, the manufacturer will incur the expense of such testing and the AHJ may immediately revoke, modify, or suspend the use of such product or material within their jurisdiction. BORA reserves the right to revoke this acceptance, if it is determined by Miami-Dade County Product Control Division that this product or material fails to meet the requirements of the applicable building code.

This product is approved as described herein, and has been designed to comply with the Florida Building Code, including the High Velocity Hurricane Zone.

DESCRIPTION: Series "SH-4000" Aluminum Single Hung Window

APPROVAL DOCUMENT: Drawing No. **2736**, titled "Aluminum Single Hung Window (TG-A)", sheets 1 through 9 of 9, prepared, signed and sealed by Robert L.Clark, P.E., dated 8/31/01 with revisions 11/03/03, bearing the Miami-Dade County Product Control Revision Stamp with the Notice of Acceptance number and expiration date by the Miami-Dade County Product Control Division.

MISSILE IMPACT RATING: None

LABELING: Each unit shall bear a permanent label with the manufacturer's name or logo, city, state and following statement: "Miami-Dade County Product Control Approved", unless otherwise noted herein.

RENEWAL of this NOA shall be considered after a renewal application has been filed and there has been no change in the applicable building code negatively affecting the performance of this product.

TERMINATION of this NOA will occur after the expiration date or if there has been a revision or change in the materials, use, and/or manufacture of the product or process. Misuse of this NOA as an endorsement of any product, for sales, advertising or any other purposes shall automatically terminate this NOA. Failure to comply with any section of this NOA shall be cause for termination and removal of NOA.

ADVERTISEMENT: The NOA number preceded by the words Miami-Dade County, Florida, and followed by the expiration date may be displayed in advertising literature. If any portion of the NOA is displayed, then it shall be done in its entirety.

INSPECTION: A copy of this entire NOA shall be provided to the user by the manufacturer or its distributors and shall be available for inspection at the job site at the request of the Building Official.

This NOA **revises NOA # 02-0702.02** and, consists of this page 1 and evidence page E-1 and E-2, as well as approval document mentioned above.

The submitted documentation was reviewed by **Theodore Berman, P.E.**

3/29/2004

PRODUCT CONTROL ACCEPTED

NOA No 04-0203.02
Expiration Date: September 30, 2006
Approval Date: April 22, 2004

PGT Industries

NOTICE OF ACCEPTANCE: EVIDENCE SUBMITTED

A. DRAWINGS

1. Manufacturer's die drawings and sections.
2. Drawing No **2736**, titled "Series "Aluminum Single Hung Window (TG-A)" Sheets 1 through 9 of 9, dated 04/18/01 and last revised on 11/30/03.

B. TESTS

1. Test reports on1) Uniform Static Air Pressure Test, Loading per FBC, TAS 202-94 along with marked-up drawings and installation diagram of aluminum single hung window, prepared by Fenestration Testing Laboratory, Inc., Test Report No. **FTL-3654,** signed and sealed by Joseph C. Chan, P.E.
2. Test reports on 1) Air Infiltration Test, per PA 202-94
   2) Uniform Static Air Pressure Test, Loading per FBC, TAS 202-94
   3) Water Resistance Test, per FBC, TAS 202-94
   4) Forced Entry Test, per SFBC 2411.3.2.1 (b) and TAS 202-94

   along with marked-up drawings and installation diagram of aluminum single hung windows, prepared by Fenestration Testing Laboratory, Inc., Test Report No. **FTL-2959, 2960, 2961, 2962, 2963** and **2964** dated various, signed and sealed by Antonio Acevedo, P.E.
   "Submitted under NOA # 01-0516.10"

C. CALCULATIONS

1. Anchor Calculations, ASTM-E1300, and structural analysis, prepared by PGT Industries, dated 1/8/04, signed and sealed by Robert L. Clark, P.E.
2. Anchor Calculations dated 5/2/2000, last revised on 08-09-2001, prepared, signed and sealed by Robert L. Clark, P.E.
   " Submitted under NOA # 01-0516.10"

D. QUALITY ASSURANCE

1. Miami Dade Building Code Compliance Office (BCCO).

E. MATERIAL CERTIFICATIONS

1. None.

F. STATEMENTS

1. Statement letter of conformance, dated May 11, 2001, signed by Robert L. Clark, P.E.
   "Submitted under NOA# 01-0516.10"

Theodore Berman, P.E.
Deputy Director, Product Control Division
NOA No 04-0203.02
Expiration Date: September 30, 2006
Approval Date: April 22, 2004

NOTICE OF ACCEPTANCE: EVIDENCE SUBMITTED

2. Statement letter of no financial interest, dated May 11, 2001, signed by Robert L. Clark, P.E.
   "Submitted under NOA# 01-0516.10"
3. Laboratory compliance statement as part of test reports for Test Report no. **FTL-**2959, 2960, 2961, 2962, 2963 and 2964, issued by Fenestration Testing Laboratory, Inc., signed and sealed by signed and sealed by Antonio Acevedo, P.E.
   "Submitted under NOA # 01-0516.10"
4. "Expedite" file review request dated July 23, 2001, by PGT, signed by Robert L. Clark, P.E.
   "Submitted under NOA # 01-0516.10"

G. OTHER

1. Letter from the consultant stating that the product is in compliance with the Florida Building Code (FBC).

Theodore Berman, P.E.
Deputy Director, Product Control Division
NOA No 04-0203.02
Expiration Date: September 30, 2006
Approval Date: April 22, 2004

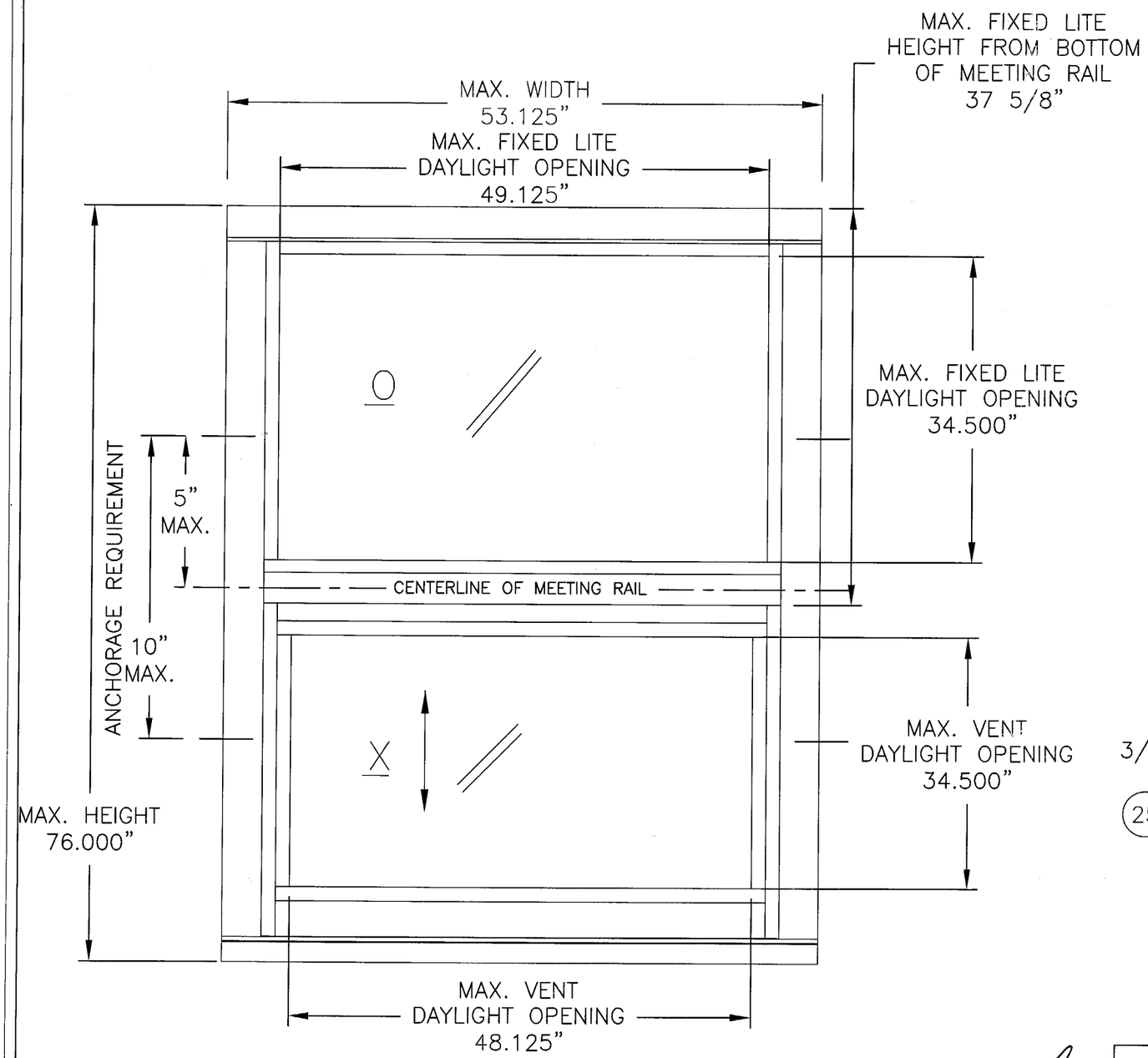

COMPARATIVE ANALYSIS FOR: GLASS: 3/16 TEMPERED — FTL- 2959

Window Width	Window Height 26.000 (4) neg	26.000 (4) pos	38.375 (4) neg	38.375 (4) pos	50.625 (4) neg	50.625 (4) pos	63.000 (6) neg	63.000 (6) pos	76.000 (6) neg	76.000 (6) pos
19.125 (2)	-135.00	56.67	-135.00	56.67	-131.80	56.67	-94.65	56.67	-73.01	56.67
24.000 (2)	-135.00	56.67	-135.00	56.67	-124.29	56.67	-84.85	56.67	-63.64	56.67
26.500 (2)	-135.00	56.67	-135.00	56.67	-123.95	56.67	-82.11	56.67	-60.55	56.67
32.000 (3)	-135.00	56.67	-135.00	56.67	-123.95	56.67	-80.04	56.67	-56.41	56.41
37.000 (3)	-135.00	56.67	-135.00	56.67	-115.74	56.67	-80.04	56.67	-55.04	55.04
40.000 (3)	-135.00	56.67	-122.25	56.67	-103.04	56.67	-80.04	56.67	-55.00	55.00
44.000 (3)	-135.00	56.67	-108.03	56.67	-89.89	56.67	-80.04	56.67	-55.00	55.00
48.000 (3)	-132.20	56.67	-96.78	56.67	-79.72	56.67	-70.21	56.67	-55.00	55.00
53.125 (4)	117.70	56.67	-85.39	56.67	-69.62	56.67	-60.58	56.67	-55.00	55.00

COMPARATIVE ANALYSIS FOR: GLASS: 3/16 ANNEALED — FTL- 2960

Window Width	Window Height 26.000 (4) neg	26.000 (4) pos	38.375 (4) neg	38.375 (4) pos	50.625 (4) neg	50.625 (4) pos	63.000 (6) neg	63.000 (6) pos	76.000 (6) neg	76.000 (6) pos
19.125 (2)	-120.00	56.67	-120.00	56.67	-120.00	56.67	-94.65	56.67	-73.01	56.67
24.000 (2)	-120.00	56.67	-120.00	56.67	-120.00	56.67	-84.85	56.67	-63.64	56.67
26.500 (2)	-120.00	56.67	-120.00	56.67	-120.00	56.67	-82.11	56.67	-60.55	55.04
32.000 (3)	-120.00	56.67	-120.00	56.67	-101.70	56.67	-80.04	56.67	-56.41	51.28
37.000 (3)	-120.00	56.67	-120.00	56.67	-86.40	56.67	-70.90	56.67	-55.04	50.03
40.000 (3)	-120.00	56.67	-118.60	56.67	-80.90	56.67	-65.80	56.67	-55.00	50.00
44.000 (3)	-120.00	56.67	-108.03	56.67	-73.10	56.67	-59.20	56.67	-52.30	50.00
48.000 (3)	-120.00	56.67	-96.78	56.67	-64.80	56.67	-53.90	53.90	-48.00	48.00
53.125 (4)	-117.70	56.67	-85.39	56.67	-59.50	56.67	-47.90	47.90	-43.10	43.10

COMPARATIVE ANALYSIS NOTES:

1.) Numbers in ( ) parentheses are quantity of anchors per side.
2.) Negative Design Loads based on Comparative Analysis and Glass Table ASTM E1300.
3.) Positive Design Loads based on Comparative Analysis and Water Test Pressure.
4.) Numbers are for #10 screws or 3/16" Tapcons. (#12 screws may be used instead of #10's)
5.) Anchors 5.00" max. from each corner and 5.00" max. on either side of meeting rail.
Max. anchor spacing of 16" at jambs and 20" at head and sill.

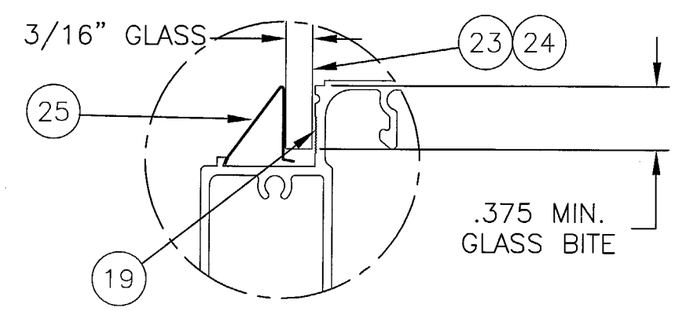

3/16 GLAZING DETAIL

PRODUCT REVISED
as complying with the Florida
Buiding Code
Acceptance No. 04-0203.02
Expiration Date 09/30/06
By: [signature]
Miami Dade Product Control
Division

NON-IMPACT WINDOWS

1.) TEST REPORT, GLAZING, MAXIMUM SIZE
A) FTL-2959, 3/16" TEMPERED, 53.125 x 76.000
B) FTL-2960, 3/16" ANNEALED, 53.125 x 76.000
2.) SHUTTERS ARE REQUIRED AT ALL INSTALLATIONS
3.) SEE SHEET 2 OF 9 FOR SECTION DETAILS

[signature] 11/5/03
Robert L. Clark, P.E.
PE #39712
Structural

Revsd By:	Date:	Revisions:
F.K.	11/03/03	B-NO CHG THIS SHT
F.K.	8/31/1	A-REDRAWN

Drawn By: F.K. Date: 4/18/01

PGT INDUSTRIES

Description: FLANGED W/ 3/16T OR 3/16A GLASS

Title: ALUMINUM SINGLE HUNG WINDOW (TG-A)

1070 TECHNOLOGY DRIVE
NOKOMIS, FL 34275
P.O. BOX 1529
NOKOMIS, FL 34274

Series/Model:	Scale:	Sheet:	Drawing No.	Rev:
SH-4000	NTS	1 of 9	2736	B

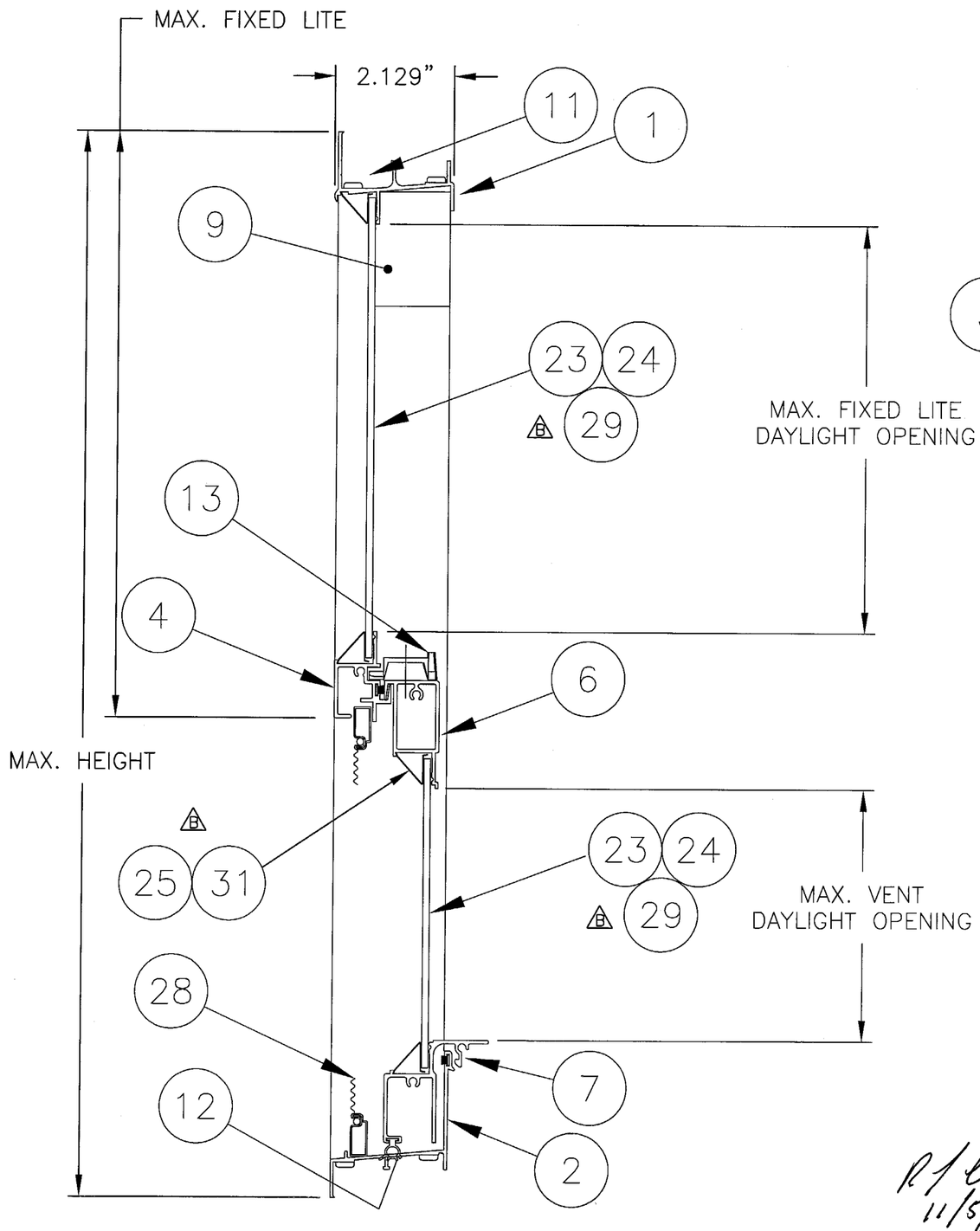

VERTICAL SECTION

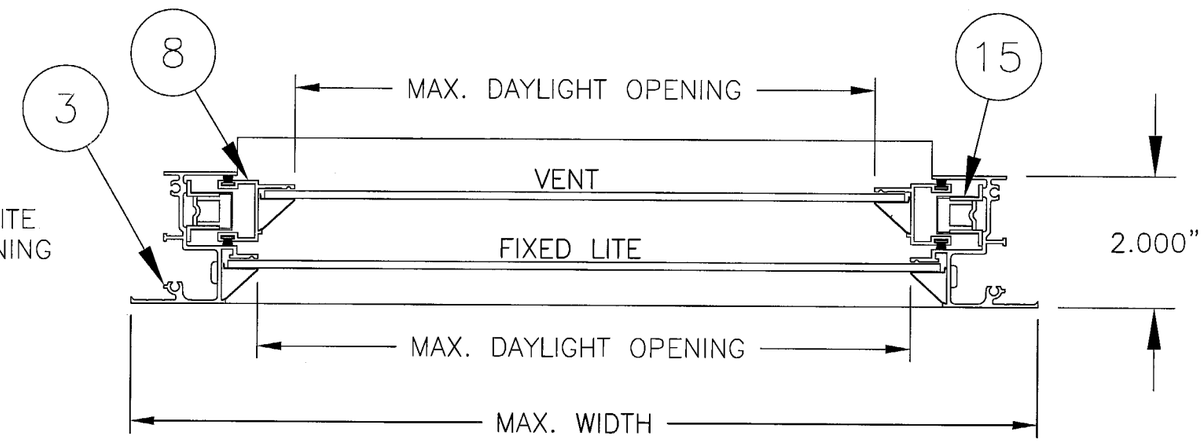

HORIZONTAL SECTION

NON–IMPACT WINDOWS

1.) TEST REPORT, GLAZING, MAXIMUM SIZE
   A) FTL–2959, 3/16" TEMPERED, 53.125 x 76.000
   B) FTL–2960, 3/16" ANNEALED, 53.125 x 76.000
2.) SHUTTERS ARE REQUIRED AT ALL INSTALLATIONS

PRODUCT REVISED
as complying with the Florida
Building Code
Acceptance No 04-0203.02
Expiration Date 09/30/06
By
Miami Dade Product Control
Division

11/5/03
Robert L. Clark, P.E.
PE #39712
Structural

	Revsd By: F.K.	Date: 11/03/03	Revisions: B–ADD 1/2" I.G. GLASS AND GLAZING BEAD
	Revsd By: F.K.	Date: 8/31/1	Revisions: REDRAWN
Drawn By: F.K.	Date: 4/18/01		
Description: SECTIONS FROM SHEET 1, 3/16 GLASS			
Title: ALUMINUM SINGLE HUNG WINDOW (TG–A)			

PGT INDUSTRIES

1070 TECHNOLOGY DRIVE
NOKOMIS, FL 34275

P.O. BOX 1529
NOKOMIS, FL 34274

Series/Model:	Scale:	Sheet:	Drawing No.	Rev:
SH–4000	NTS	2 of 9	2736	B

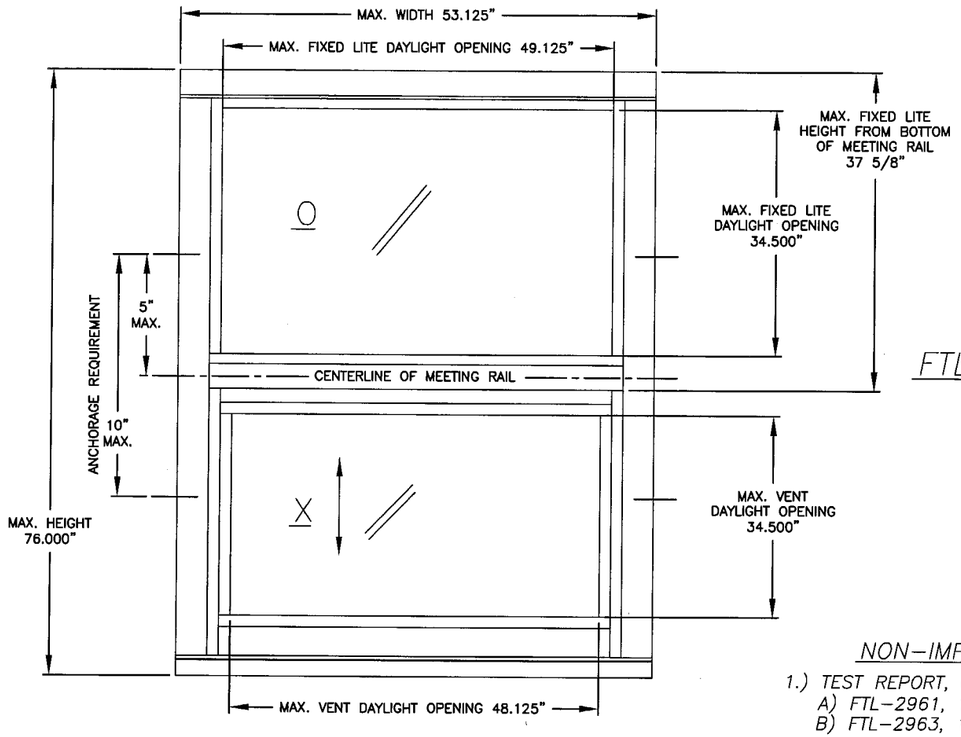

FTL-2961

COMPARATIVE ANALYSIS FOR:	GLASS: DSB ANNEALED									FTL- 2961
	Window Height									
Window Width	26.000 (4)		38.375 (4)		50.625 (4)		63.000 (6)		76.000 (6)	
	neg	pos	neg	pos	neg	pos	neg	pos	neg	pos
19.125 (2)	-75.00	56.67	-75.00	56.67	-75.00	56.67	-56.79	56.67	-43.81	43.81
24.000 (2)	-75.00	56.67	-75.00	56.67	-74.60	56.67	-50.91	50.91	-38.18	38.18
26.500 (2)	-75.00	56.67	-75.00	56.67	-70.00	56.67	-49.27	49.27	-36.33	36.33
32.000 (3)	-75.00	56.67	-67.80	56.67	-57.40	56.67	-48.02	48.02	-33.84	33.84
37.000 (3)	-75.00	56.67	-56.50	56.50	-49.60	49.60	-43.70	43.70	-33.02	33.02
40.000 (3)	-75.00	56.67	-52.50	52.50	-45.30	45.30	-40.20	40.20	-33.00	33.00
44.000 (3)	-75.00	56.67	-47.50	47.50	-40.00	40.00	-36.70	36.70	-32.80	32.80
48.000 (3)	-75.00	56.67	-45.10	45.50	-35.70	35.70	-33.70	33.70	-29.80	29.80
53.125 (4)	-70.60	56.67	-43.20	43.20	-30.90	30.90	-29.70	29.70	-27.60	27.60

COMPARATIVE ANALYSIS FOR:	GLASS: DSB ANNEALED								FTL- 2963
	Window Height								
Window Width	26.000 (4)		38.375 (4)		50.625 (4)		63.000 (6)		
	neg	pos	neg	pos	neg	pos	neg	pos	
19.125 (2)	-75.00	56.67	-75.00	56.67	-75.00	56.67	-69.40	56.67	
24.000 (2)	-75.00	56.67	-75.00	56.67	-75.00	56.67	-59.80	56.67	
26.500 (2)	-75.00	56.67	-75.00	56.67	-70.00	56.67	-56.60	56.60	
32.000 (3)	-75.00	56.67	-67.80	56.67	-57.40	56.67	-50.80	50.80	
37.000 (3)	-75.00	56.67	-56.50	56.50	-49.60	49.60	-43.70	43.70	

COMPARATIVE ANALYSIS NOTES:

1.) Numbers in ( ) parentheses are quantity of anchors per side.
2.) Negative Design Loads based on Comparative Analysis and Glass Table ASTM E1300.
3.) Positive Design Loads based on Comparative Analysis and Water Test Pressure.
4.) Numbers are for #10 screws or 3/16" Tapcons. (#12 screws may be used instead of #10's)
5.) Anchors 5.00" max. from each corner and 5.00" max. on either side of meeting rail.
Max. anchor spacing of 16" at jambs and 20" at head and sill.

NON-IMPACT WINDOWS

1.) TEST REPORT, GLAZING, MAXIMUM SIZE
A) FTL-2961, 1/8" DOUBLE STRENGTH ANNEALED, 53.125 x 76.000
B) FTL-2963, 1/8" DOUBLE STRENGTH ANNEALED, 37.000 x 63.000
2.) SHUTTERS ARE REQUIRED AT ALL INSTALLATIONS
3.) PRESSURES UNDER 40 PSF ARE NOT APPLICABLE IN MIAMI-DADE COUNTY
4.) SEE SHEET 4 OF 8 FOR SECTION DETAILS

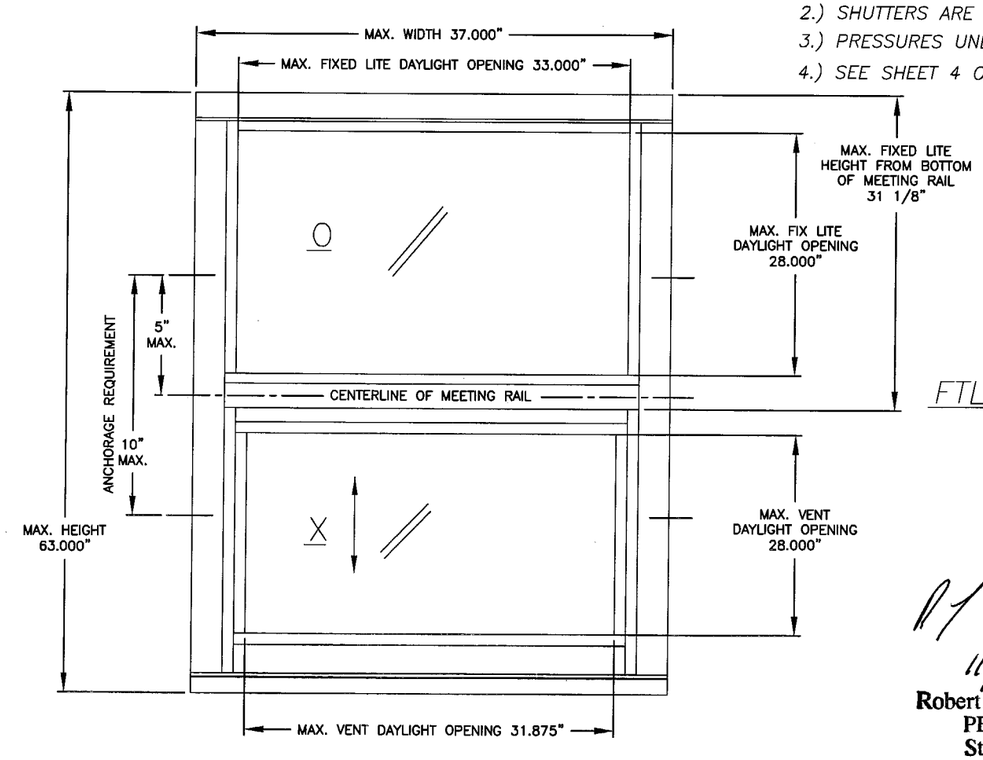

FTL-2963

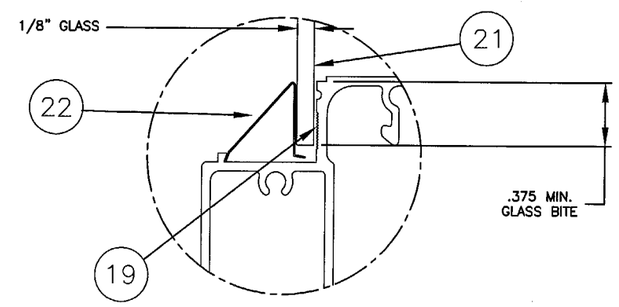

1/8 GLAZING DETAIL

PRODUCT REVISED
as complying with the Florida Buiding Code
Acceptance No. 04-0203.02
Expiration Date 09/30/06
By
Miami Dade Product Control Division

11/5/03
Robert L. Clark, P.E.
PE #39712
Structural

Revsd By: F.K.	Date: 10/03/03	Revisions: B-NO CHG THIS SHT	
Revsd By: F.K.	Date: 8/31/1	Revisions: REDRAWN	
Drawn By: F.K.	Date: 4/18/01		

PGT INDUSTRIES

Description: FLANGED W/ DSB GLASS

Title: ALUMINUM SINGLE HUNG WINDOW (TG-A)

1070 TECHNOLOGY DRIVE NOKOMIS, FL 34275	P.O. BOX 1529 NOKOMIS, FL 34274	Series/Model: SH-4000	Scale: NTS	Sheet: 3 of 9	Drawing No. 2736	Rev: B

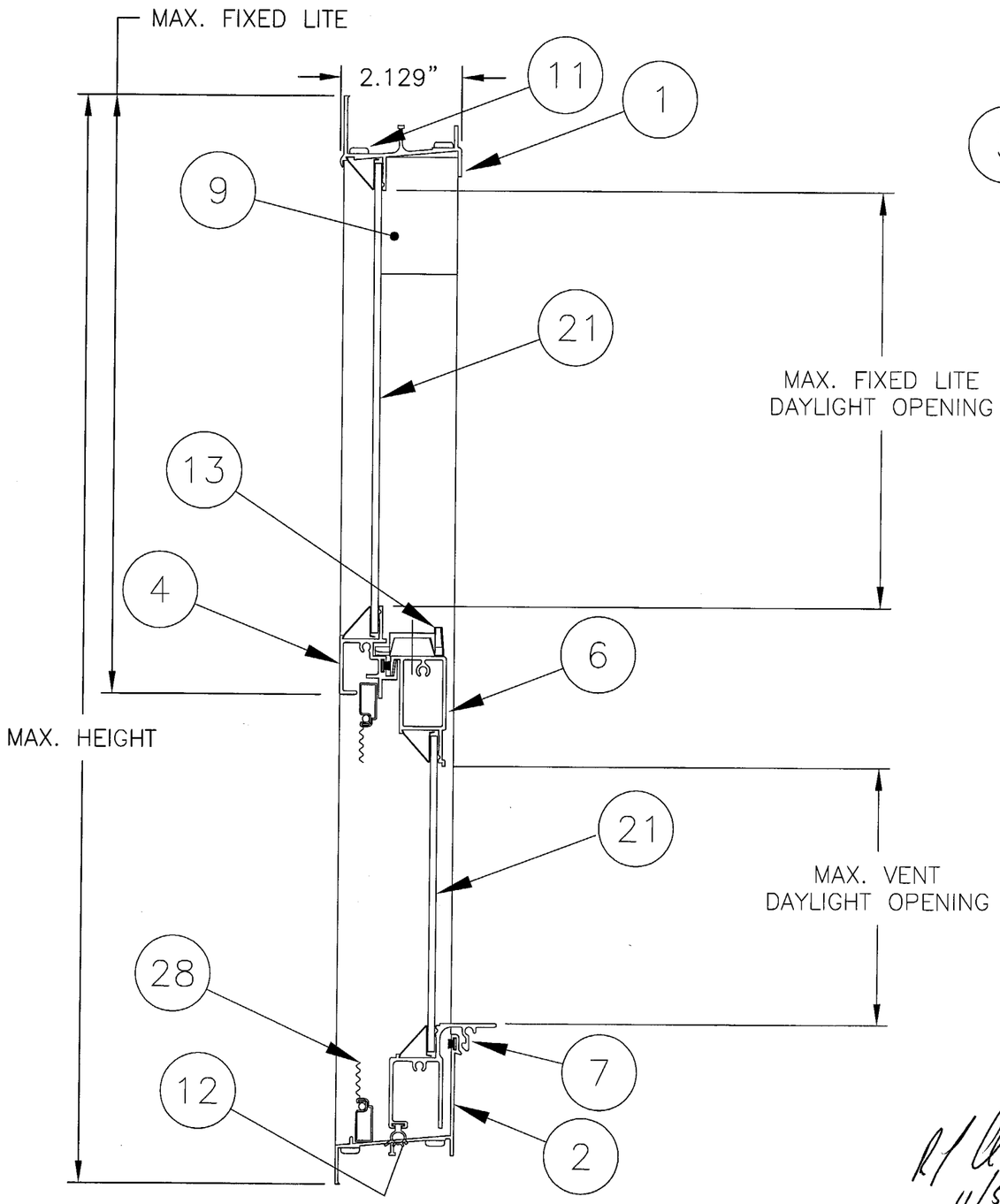

VERTICAL SECTION

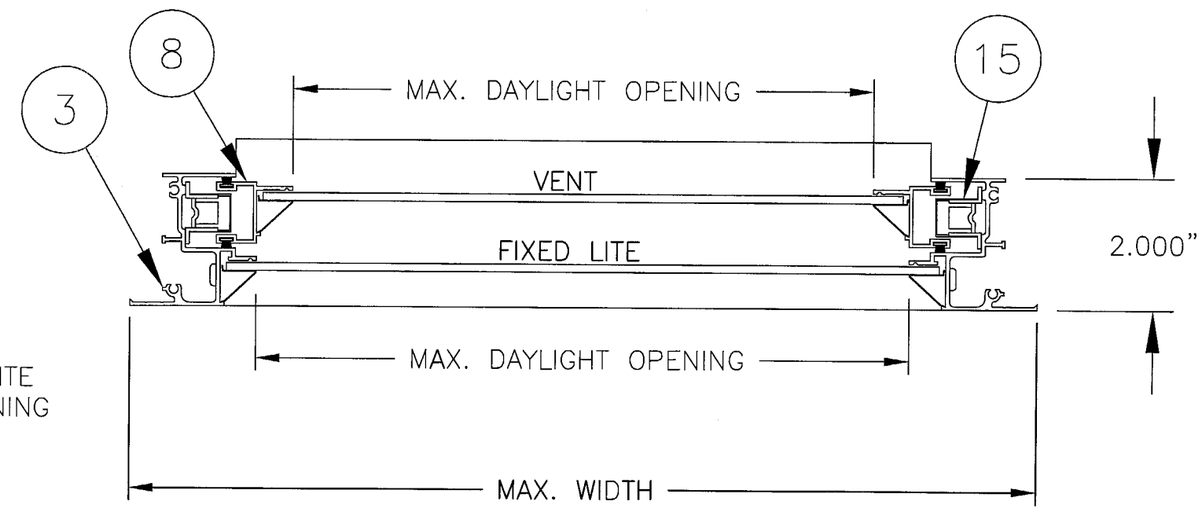

HORIZONTAL SECTION

NON–IMPACT WINDOWS

1.) TEST REPORT, GLAZING, MAXIMUM SIZE
   A) FTL–2961, 1/8" DOUBLE STRENGTH ANNEALED, 53.125 x 76.000
   B) FTL–2963, 1/8" DOUBLE STRENGTH ANNEALED, 37.000 x 63.000
2.) SHUTTERS ARE REQUIRED AT ALL INSTALLATIONS

PRODUCT REVISED
as complying with the Florida
Buiding Code
Acceptance No 04-0203.02
Expiration Date 09/30/06
By
Miami Dade Product Control
Division

11/5/03
Robert L. Clark, P.E.
PE #39712
Structural

	Revsd By: F.K.	Date: 11/03/03	Revisions: B–NO CHG THIS SHT
	Revsd By: F.K.	Date: 8/31/1	Revisions: REDRAWN
Drawn By: F.K.	Date: 4/18/01		
Description: SECTIONS FROM SHEET 3, 1/8 GLASS			
Title: ALUMINUM SINGLE HUNG WINDOW (TG–A)			

PGT INDUSTRIES

1070 TECHNOLOGY DRIVE
NOKOMIS, FL 34275

P.O. BOX 1529
NOKOMIS, FL 34274

Series/Model:	Scale:	Sheet:	Drawing No.	Rev:
SH–4000	NTS	4 of 9	2736	B

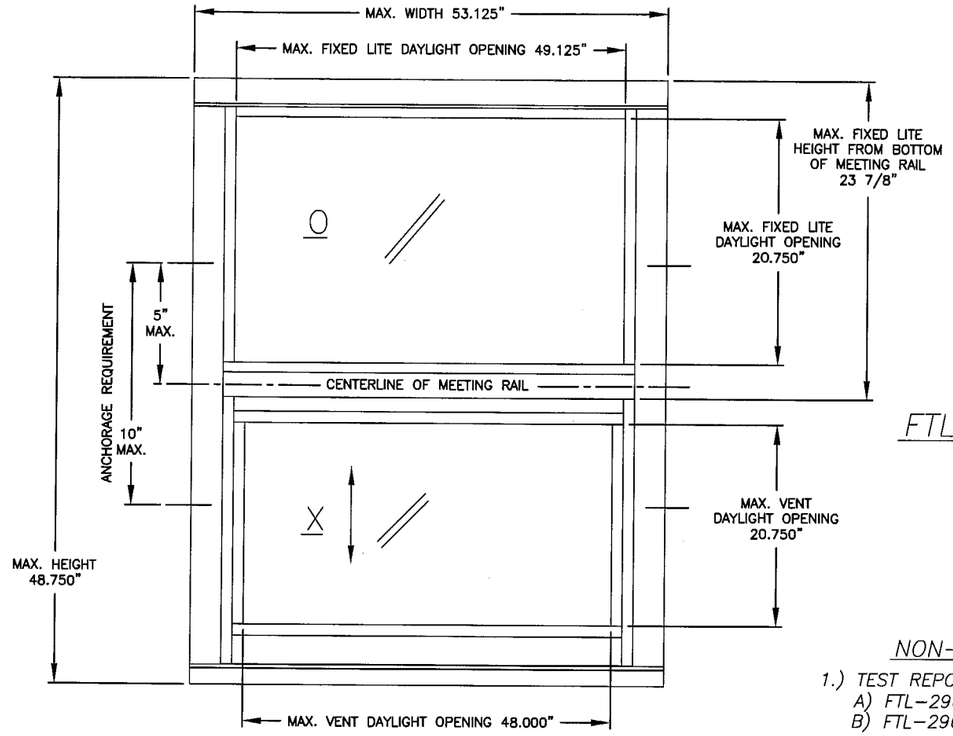

FTL–2962

COMPARATIVE ANALYSIS FOR:	GLASS: SSB ANNEALED						FTL- 2962
	Window Height						
Window Width	26.000 (4)		38.375 (4)		48.750 (4)		
	neg	pos	neg	pos	neg	pos	
19.125 (2)	-75.00	56.67	-56.50	56.48	-36.70	36.70	
24.000 (2)	-75.00	56.67	-56.48	56.48	-35.01	35.01	
26.500 (2)	-75.00	56.67	-56.48	56.48	-35.00	35.00	
32.000 (3)	-68.70	56.67	-48.00	48.00	-35.00	35.00	
37.000 (3)	-63.70	56.67	-39.30	39.30	-35.00	35.00	
40.000 (3)	-62.50	56.67	-34.90	34.90	-33.90	33.90	
44.000 (3)	-59.60	56.67	-30.20	30.20	-30.20	30.20	
48.000 (3)	-57.60	56.67	-27.70	27.70	-26.70	26.70	
53.125 (4)	-55.80	55.80	-25.00	25.00	-22.60	22.60	

COMPARATIVE ANALYSIS FOR:	GLASS: SSB ANNEALED									FTL- 2964
	Window Height									
Window Width	26.000 (4)		38.375 (4)		50.625 (4)		63.000 (4)		70.000 (6)	
	neg	pos	neg	pos	neg	pos	neg	pos	neg	pos
19.125 (2)	-75.00	56.67	-75.00	56.67	-63.50	56.67	-48.70	48.70	-42.40	42.40
24.000 (2)	-75.00	56.67	-67.00	56.67	-55.10	55.10	-44.40	44.40	-38.84	38.84
26.500 (2)	-75.00	56.67	-60.70	56.67	-50.80	50.80	-41.90	41.90	-37.19	37.19
32.000 (3)	-68.70	56.67	-48.00	48.00	-42.60	42.60	-35.70	35.70	-32.50	32.50
37.000 (3)	-60.25	56.67	-39.30	39.30	-36.40	36.40	-31.10	31.10	-28.10	28.10

COMPARATIVE ANALYSIS NOTES:

1.) Numbers in ( ) parentheses are quantity of anchors per side.
2.) Negative Design Loads based on Comparative Analysis and Glass Table ASTM E1300.
3.) Positive Design Loads based on Comparative Analysis and Water Test Pressure.
4.) Numbers are for #10 screws or 3/16" Tapcons. (#12 screws may be used instead of #10's)
5.) Anchors 5.00" max. from each corner and 5.00" max. on either side of meeting rail.
Max. anchor spacing of 16" at jambs and 20" at head and sill.

NON–IMPACT WINDOWS

1.) TEST REPORT, GLAZING, MAXIMUM SIZE
A) FTL–2962, 3/32" SINGLE STRENGTH ANNEALED, 53.125 x 48.750
B) FTL–2964, 3/32" SINGLE STRENGTH ANNEALED, 37.000 x 70.000
2.) SHUTTERS ARE REQUIRED AT ALL INSTALLATIONS
3.) PRESSURES UNDER 40 PSF ARE NOT APPLICABLE IN MIAMI–DADE COUNTY
4.) SEE SHEET 6 OF 8 FOR SECTION DETAILS

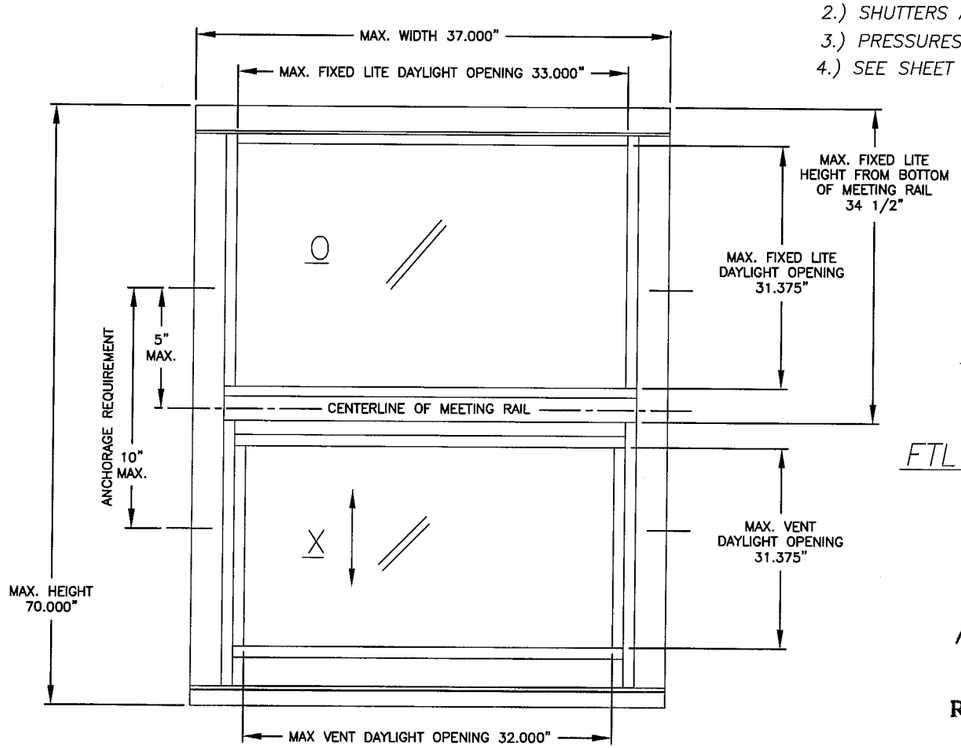

FTL–2964

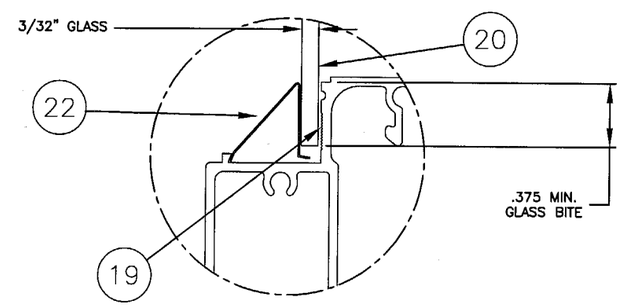

3/32 GLAZING DETAIL

PRODUCT REVISED
as complying with the Florida Buiding Code
Acceptance No. 04-0203.02
Expiration Date 09/30/06
By Glenda Bean
Miami Dade Product Control Division

11/5/03
Robert L. Clark, P.E.
PE #39712
Structural

Revsd By: F.K.	Date: 10/03/03	Revisions: B–NO CHG THIS SHT	
Revsd By: F.K.	Date: 8/31/1	Revisions: REDRAWN	
Drawn By: F.K.	Date: 4/18/01		
Description: FLANGED W/ SSB GLASS			
Title: ALUMINUM SINGLE HUNG WINDOW (TG–A)			

PGT INDUSTRIES

1070 TECHNOLOGY DRIVE
NOKOMIS, FL 34275
P.O. BOX 1529
NOKOMIS, FL 34274

Series/Model:	Scale:	Sheet:	Drawing No.	Rev:
SH–4000	NTS	5 of 9	2736	B

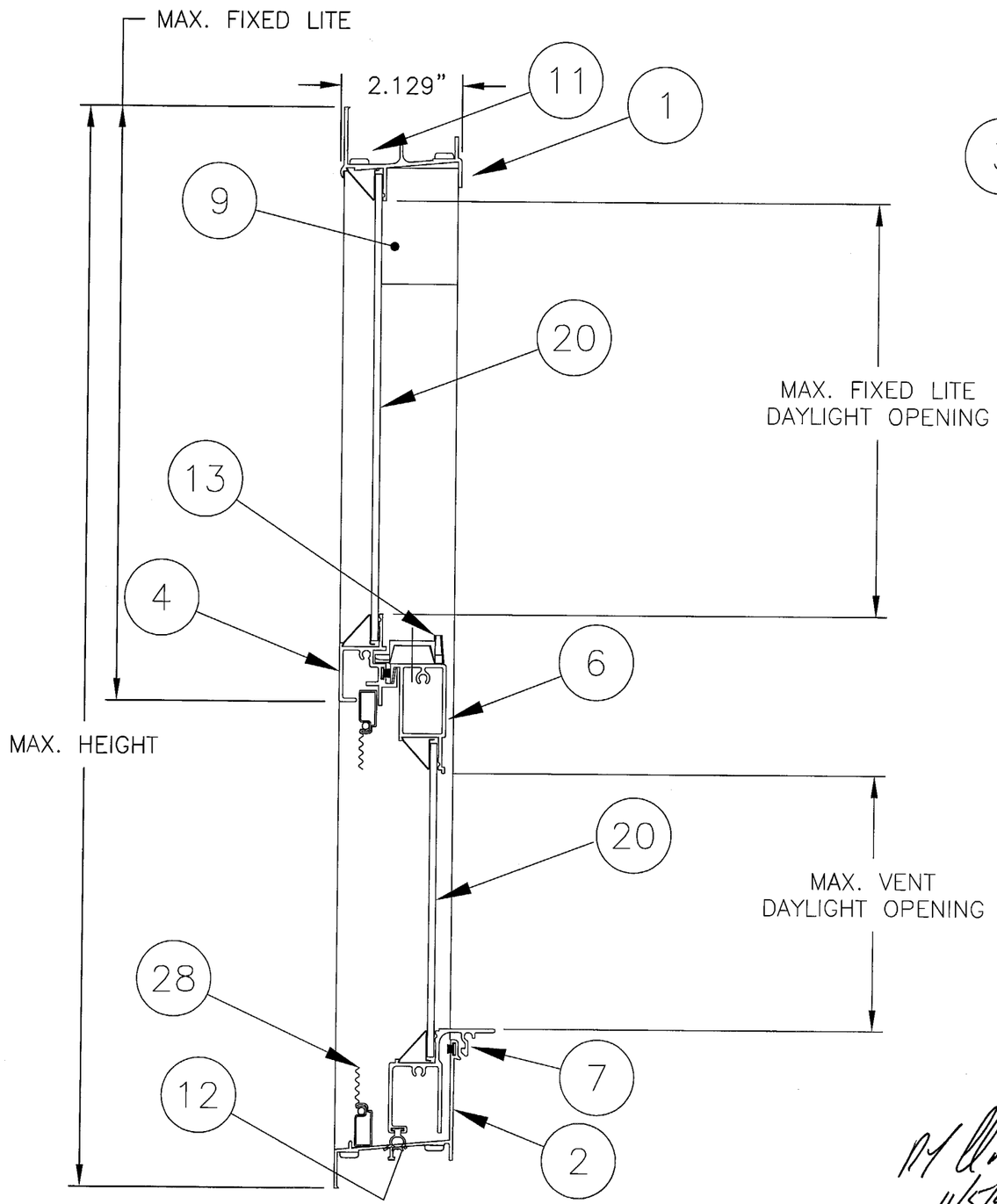

VERTICAL SECTION

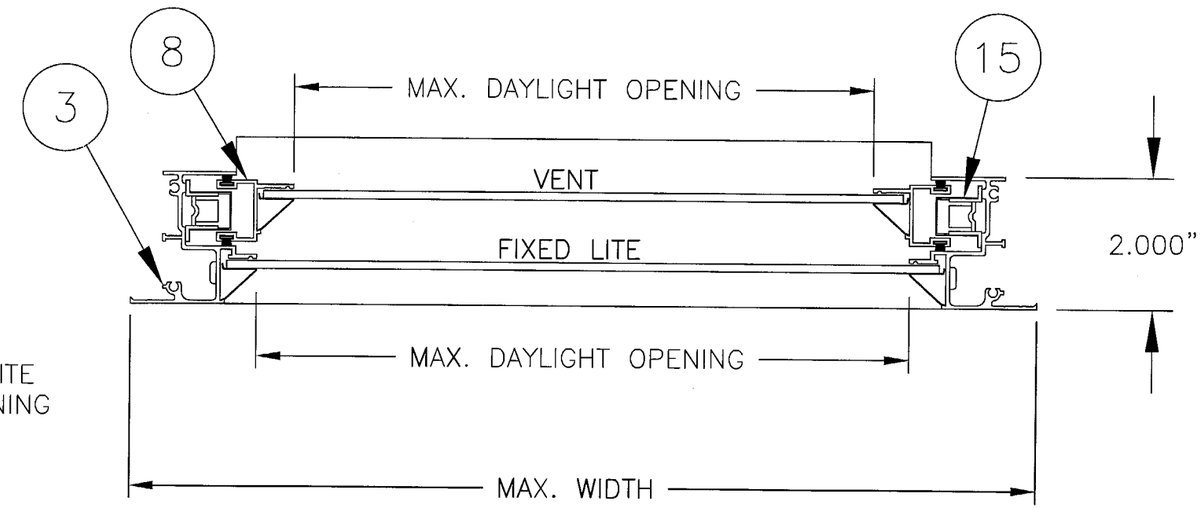

HORIZONTAL SECTION

NON–IMPACT WINDOWS

1.) TEST REPORT, GLAZING, MAXIMUM SIZE
A) FTL–2962, 3/32" SINGLE STRENGTH ANNEALED, 53.125 x 48.750
B) FTL–2964, 3/32" SINGLE STRENGTH ANNEALED, 37.000 x 70.000

PRODUCT REVISED
as complying with the Florida Building Code
Acceptance No. 04-0203.02
Expiration Date 09/30/06
By [signature]
Miami Dade Product Control Division

11/5/03
Robert L. Clark, P.E.
PE #39712
Structural

	Revsd By: F.K.	Date: 11/03/03	Revisions: B–NO CHG THIS SHT
	Revsd By: F.K.	Date: 8/31/1	Revisions: REDRAWN
Drawn By: F.K.	Date: 4/18/01		

PGT INDUSTRIES

Description: SECTIONS FROM SHEET 5, 3/32 GLASS

Title: ALUMINUM SINGLE HUNG WINDOW (TG–A)

1070 TECHNOLOGY DRIVE NOKOMIS, FL 34275	P.O. BOX 1529 NOKOMIS, FL 34274	Series/Model: SH–4000	Scale: NTS	Sheet: 6 of 9	Drawing No. 2736	Rev: B

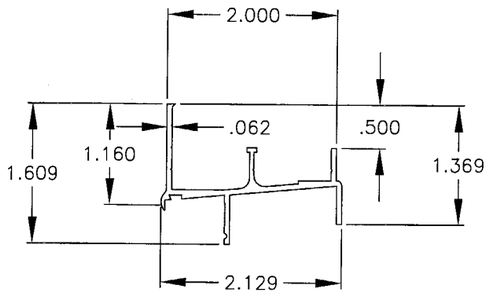

1 HEAD EXTRUSION

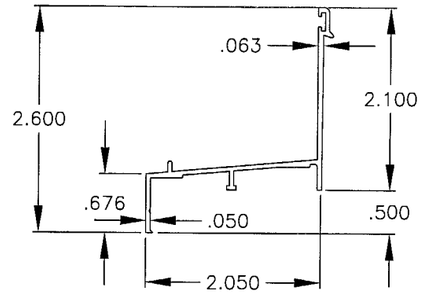

2 SILL EXTRUSION

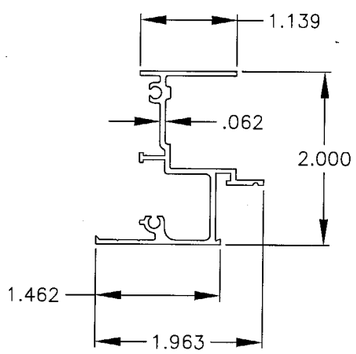

3 JAMB EXTRUSION

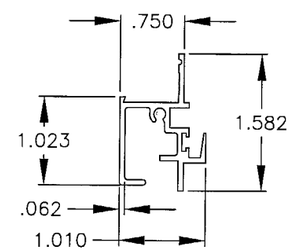

4 STANDARD MEETING RAIL

ITEM	DESCRIPTION	PGT #	VENDOR	VENDOR #
1	FLANGED FRAME HEAD	62703	6063-T6	
2	FLANGED FRAME SILL	62704	6063-T6	
3	FLANGED FRAME JAMB	62705	6063-T6	
4	FIXED MEETING RAIL	6534521	6063-T6	534521
5	#8 x 1.000 QUAD PAN HEAD SMS	781PQ	SPENCER OR =	
6	SASH TOP RAIL	6534522	6063-T6	534522
7	SASH BOTTOM RAIL	6534523	6063-T6	534523
8	SASH SIDE RAIL	6534524	6063-T6	534524
9	SASH STOP	66387	6063-T6	AF-6387
10	SASH CAM INSERT (L.H. & R.H.)	42800	PGT	
11	#8 x .750 QUAD PAN HEAD SMS	7834PA	SPENCER OR =	
12	WEATHERSTRIP, VINYL BULB W/LEAF	6TP249	TEAM PLASTICS	TP-249
13	SWEEP LATCH	71096	MINIATURE DIE CASTING	PGT.214.XX
14	#8 x .625 PHILLIPS FLAT HEAD SMS	7858	SPENCER OR =	
15	BALANCE		CALDWELL	
16	WEATHERSTRIP, .187 x .270 FIN	61062	TEAM PLASTICS	FS7826-187
17	WEATHERSTRIP, .187 x .200, FIN	67919	SCHLEGEL	FS7919-187
18	BALANCE TAKE-OUT CLIP	7121UM	CALDWELL	
19	SILICON GLAZING SEALANT	62899	DOW, GE OR EQUAL	
20	SSB 3/32" ANNEALED GLASS			
21	DSB 1/8" ANNEALED GLASS			
22	SSB & DSB GLAZING BEAD	65200	FLORIDA SCREEN OR =	05-200
23	3/16" ANNEALED GLASS			
24	3/16" TEMPERED GLASS			
25	3/16" GLAZING BEAD	65196	FLORIDA SCREEN OR =	05-196
26	#8 x 1.000 QUAD PAN HEAD SMS	781PQ	SPENCER OR =	
27	1" x 1.5" OPEN CELL FOAM PAD			
28	SCREEN ASSEMBLY			
B 29	1/2" I.G. GLASS (1/8"A,1/4"S,1/8"A)			
30	INSULATED GLAZING BEAD	1253	TEAM PLASTICS	
31	SWIGGLE			

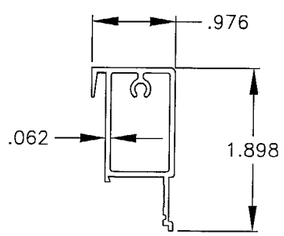

6 SASH TOP RAIL EXTRUSION

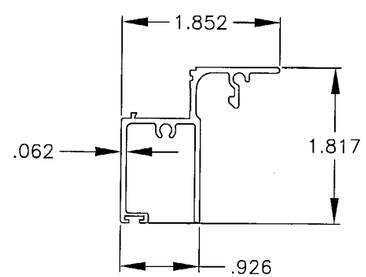

7 SASH BOTTOM RAIL EXTRUSION

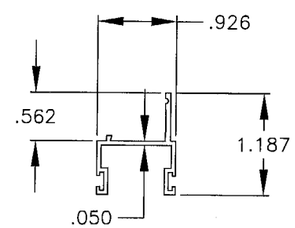

8 SASH SIDE RAIL EXTRUSION

PRODUCT REVISED
as complying with the Florida
Buiding Code
Acceptance No. 04-0203.02
Expiration Date 09/30/06
By
Miami Dade Product Control
Division

REFERENCE TEST REPORTS:

FTL-2959, FTL-2960, FTL-2961
FTL-2962, FTL-2963, FTL-2964, FTL-3654 B

11/5/03
Robert L. Clark, P.E.
PE #39712
Structural

Revsd By:	Date:	Revisions:
F.K.	11/03/03	B-ADD ITEMS 29, 30 & 31
F.K.	8/31/1	REDRAWN

Drawn By: F.K. Date: 4/18/01

PGT INDUSTRIES

Description: PROFILES & PARTS LIST

Title: ALUMINUM SINGLE HUNG WINDOW (TG-A)

1070 TECHNOLOGY DRIVE
NOKOMIS, FL 34275

P.O. BOX 1529
NOKOMIS, FL 34274

Series/Model:	Scale:	Sheet:	Drawing No.	Rev:
SH-4000	NTS	7 of 9	2736	B

TYPICAL HEAD CONFIGURATIONS

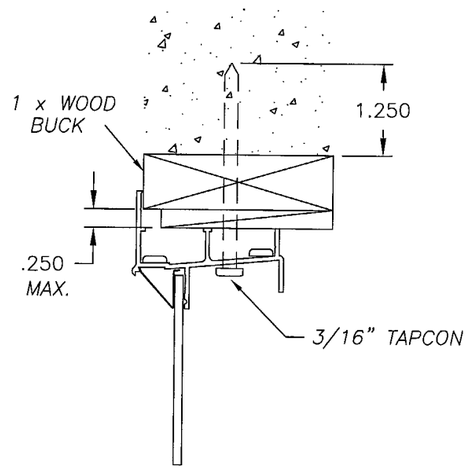

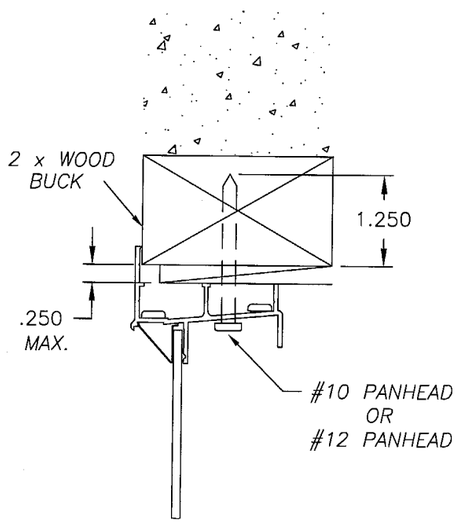

TYPICAL JAMB CONFIGURATIONS

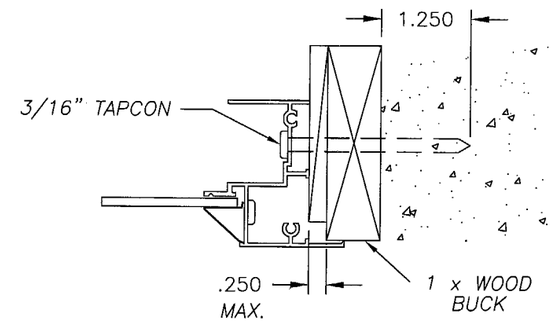

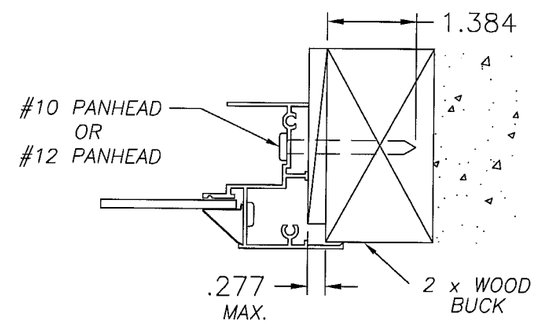

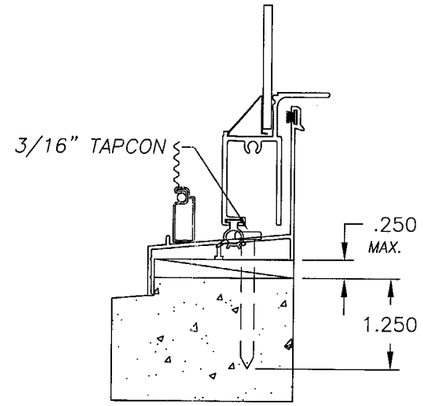

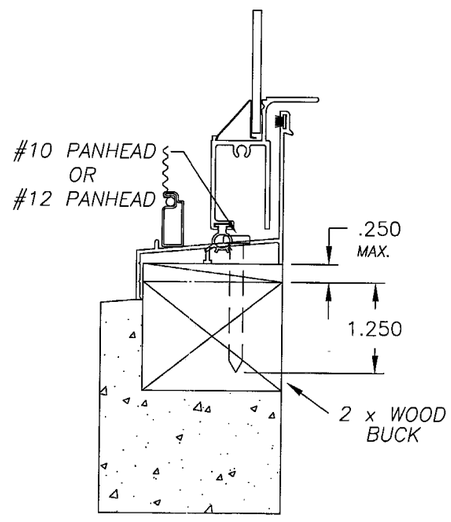

TYPICAL SILL CONFIGURATIONS

PRODUCT REVISED
as complying with the Florida Building Code
Acceptance No. 04-0203.02
Expiration Date 09/30/06
By [signature]
Miami Dade Product Control Division

NOTES:

1.) REFERENCE TEST REPORTS: FTL–2959, FTL–2960, FTL–2961, FTL–2962, FTL–2963, FTL–2964
2.) ANCHORS ARE #10 SCREWS OR 3/16" TAPCONS. (#12 SCREWS MAY BE USED INSTEAD)
3.) ANCHORS ARE LOCATED 5" FROM EACH CORNER AND 5" MAXIMUM ON EITHER SIDE OF MEETING RAIL. MAXIMUM ANCHOR SPACING OF 16" AT JAMBS AND 20" AT HEAD AND SILL.

11/5/03
Robert L. Clark, P.E.
PE #39712
Structural

	Revsd By: F.K.	Date: 11/03/03	Revisions: B–NO CHG THIS SHT
	Revsd By: F.K.	Date: 8/31/1	Revisions: REDRAWN
Drawn By: F.K.	Date: 4/18/01		

PGT INDUSTRIES

Description: ANCHORAGE DETAILS

Title: ALUMINUM SINGLE HUNG WINDOW (TG–A)

1070 TECHNOLOGY DRIVE NOKOMIS, FL 34275	P.O. BOX 1529 NOKOMIS, FL 34274	Series/Model: SH–4000	Scale: NTS	Sheet: 8 of 9	Drawing No. 2736	Rev: B

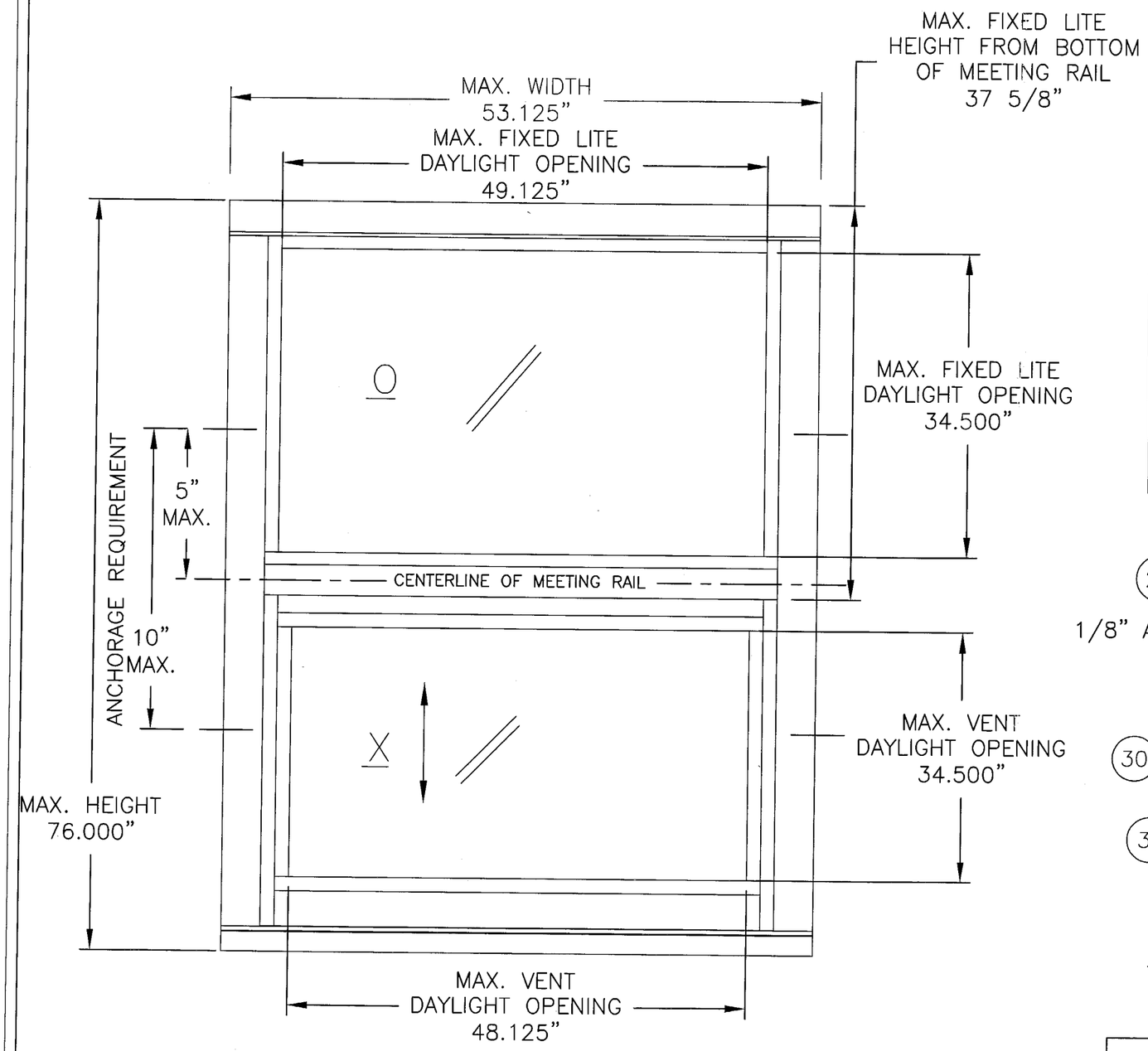

COMPARATIVE ANALYSIS FOR: GLASS: 1/2" I.G. Glass (1/8"A, 1/4" Air Space, 1/8"A) FTL- 3654

Window Width	Window Height 26.000 (4)		38.375 (4)		50.625 (4)		63.000 (6)		76.000 (6)	
	neg	pos	neg	pos	neg	pos	neg	pos	neg	pos
19.125 (2)	-135.0	56.7	-135.0	56.7	-119.8	56.7	-86.0	56.7	-66.4	56.7
24.000 (2)	-135.0	56.7	-135.0	56.7	-113.0	56.7	-77.1	56.7	-57.9	56.7
26.500 (2)	-135.0	56.7	-135.0	56.7	-112.7	56.7	-74.6	56.7	-55.0	55.0
32.000 (3)	-135.0	56.7	-122.0	56.7	-103.3	56.7	-72.8	56.7	-51.3	51.3
37.000 (3)	-135.0	56.7	-101.7	56.7	-89.3	56.7	-72.8	56.7	-50.0	50.0
40.000 (3)	-135.0	56.7	-94.5	56.7	-81.5	56.7	-72.4	56.7	-50.0	50.0
44.000 (3)	-133.0	56.7	-85.5	56.7	-72.1	56.7	-66.0	56.7	-50.0	50.0
48.000 (3)	-120.2	56.7	-81.3	56.7	-64.3	56.7	-60.7	56.7	-50.0	50.0
53.125 (4)	-107.0	56.7	-77.6	56.7	-55.7	55.7	-53.4	53.4	-49.6	49.6

COMPARATIVE ANALYSIS NOTES:

1.) Numbers in ( ) parentheses are quantity of anchors per side.
2.) Negative Design Loads based on Comparative Analysis and Glass Tables ASTM E1300-98. (and ASTM E 1300-94 outside Miami-Dade County)
3.) Positive Design Loads based on Water Test Pressure and Glass Tables ASTM E 1300-98. (and ASTM E 1300-94 outside Miami-Dade County)
4.) Numbers are for #10 screws or 3/16" Tapcons. (#12 screws may be used instead of #10's)
5.) Anchors 5.00" max. from each corner and 5.00" max. on either side of meeting rail. Max. anchor spacing of 16" at jambs and 20" at head and sill.

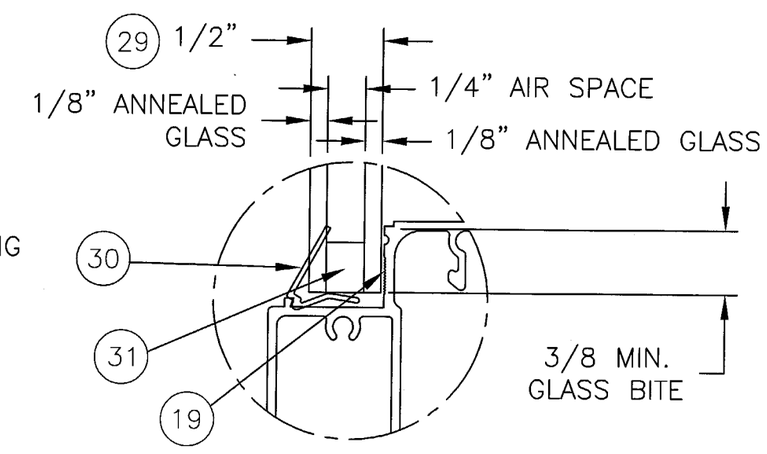

1/2" I.G. GLAZING DETAIL

PRODUCT REVISED
as complying with the Florida Building Code
Acceptance No. 04-0203.02
Expiration Date 09/30/06
By
Miami Dade Product Control Division

NON-IMPACT WINDOWS

1.) TEST REPORT, GLAZING, MAXIMUM SIZE
A) FTL-3654, 1/2" I.G., 53.125 x 76.000
(1/8" ANNEALED, 1/4" AIR SPACE, 1/8" ANNEALED)
2.) SHUTTERS ARE REQUIRED AT ALL INSTALLATIONS
3.) SEE SHEET 2 OF 9 FOR SECTION DETAILS

11/5/03
Robert L. Clark, P.E.
PE #39712
Structural

PGT INDUSTRIES

Revsd By: F.K.	Date: 11/03/03	Revisions: B-ADD NEW SHT FOR 1/2" I.G.
Drawn By: F.K.	Date: 4/18/01	
Description: FLANGED W/ 1/2" I.G. GLASS		
Title: ALUMINUM SINGLE HUNG WINDOW		

1070 TECHNOLOGY DRIVE
NOKOMIS, FL 34275
P.O. BOX 1529
NOKOMIS, FL 34274

Series/Model:	Scale:	Sheet:	Drawing No.	Rev:
SH-4000	NTS	9 of 9	2736	B