MIAMI-DADE

BUILDING CODE COMPLIANCE OFFICE (BCCO)
PRODUCT CONTROL DIVISION

MIAMI-DADE COUNTY, FLORIDA
METRO-DADE FLAGLER BUILDING
140 WEST FLAGLER STREET, SUITE 1603
MIAMI, FLORIDA 33130-1563
(305) 375-2901 FAX (305) 375-2908

NOTICE OF ACCEPTANCE (NOA)

Kinco, Ltd.
5245 Old Kings Road
Jacksonville, FL 32254

SCOPE:

This NOA is being issued under the applicable rules and regulations governing the use of construction materials. The documentation submitted has been reviewed by Miami-Dade County Product Control Division and accepted by the Board of Rules and Appeals (BORA) to be used in Miami Dade County and other areas where allowed by the Authority Having Jurisdiction (AHJ).

This NOA shall not be valid after the expiration date stated below. The Miami-Dade County Product Control Division (In Miami Dade County) and/or the AHJ (in areas other than Miami Dade County) reserve the right to have this product or material tested for quality assurance purposes. If this product or material fails to perform in the accepted manner, the manufacturer will incur the expense of such testing and the AHJ may immediately revoke, modify, or suspend the use of such product or material within their jurisdiction. BORA reserves the right to revoke this acceptance, if it is determined by Miami-Dade County Product Control Division that this product or material fails to meet the requirements of the applicable building code.

This product is approved as described herein, and has been designed to comply with the Florida Building Code, including the High Velocity Hurricane Zone.

DESCRIPTION: Series-M40 XHP Aluminum Single Hung Window

APPROVAL DOCUMENT: Drawing No. **W03-110,** titled "M40 XHP Alum Single Hung Window (N.I.).", sheets 1 through 9 of 9, prepared by AL- Farooq Corporation, dated 12/05/03, with revision **"A"** dated 03/20/04, signed and sealed by Humayoun Farooq, P.E., bearing the Miami-Dade County Product Control Approval stamp with the Notice of Acceptance number and approval date by the Miami-Dade County Product Control Division.

MISSILE IMPACT RATING: None

LABELING: Each unit shall bear a permanent label with the manufacturer's name or logo, city, state and following statement: "Miami-Dade County Product Control Approved", unless otherwise noted herein.

RENEWAL of this NOA shall be considered after a renewal application has been filed and there has been no change in the applicable building code negatively affecting the performance of this product.

TERMINATION of this NOA will occur after the expiration date or if there has been a revision or change in the materials, use, and/or manufacture of the product or process. Misuse of this NOA as an endorsement of any product, for sales, advertising or any other purposes shall automatically terminate this NOA. Failure to comply with any section of this NOA shall be cause for termination and removal of NOA.

ADVERTISEMENT: The NOA number preceded by the words Miami-Dade County, Florida, and followed by the expiration date may be displayed in advertising literature. If any portion of the NOA is displayed, then it shall be done in its entirety.

INSPECTION: A copy of this entire NOA shall be provided to the user by the manufacturer or its distributors and shall be available for inspection at the job site at the request of the Building Official.
This NOA consists of this page 1 and evidence pages E-1, as well as approval document mentioned above.
The submitted documentation was reviewed by **Theodore Berman, P.E.**

4/8/2004

PRODUCT CONTROL ACCEPTED

NOTICE OF ACCEPTANCE: EVIDENCE SUBMITTED

A. DRAWINGS

1. Manufacturers die drawings and sections.
2. Drawing No. **W03-110,** titled "M40 XHP Alum Single Hung Window (N.I.).", sheets 1 through 9 of 9, prepared by AL- Farooq Corporation, dated 12/05/03, with revisions **"A"** dated 03/20/04, signed and sealed by Humayoun Farooq, P.E.

B. TESTS

1. Test reports on 1) Air Infiltration Test, per FBC, TAS 202-94
   2) Uniform Static Air Pressure Test, Loading per FBC, TAS 202-94
   3) Water Resistance Test, per FBC, TAS 202-94
   4) Forced Entry Test, per FBC 2411.3.2.1 (b) TAS 202-94

   along with marked-up drawings and installation diagram of aluminum single hung window, prepared by Certified Testing Laboratories Architectural Division, Test Report No. **CTLA-1182-W,** dated 10/28/03, signed and sealed by Ramesh Patel, P.E.
2. Test report on 1) Uniform Static Air Pressure Test, Loading per FBC, TAS 202-94 along with marked-up drawings and installation diagram of aluminum single hung window, prepared by Certified Testing Laboratories Architectural Division, Test Report No. **CTLA-1182-W-R,** dated 01/20/04, signed and sealed by Ramesh Patel, P.E.

C. CALCULATIONS

1. Anchor Calculations, ASTM-E1300, and structural analysis, prepared by AL-Farooq Corporation, dated 12/29/03, signed and sealed by Humayoun Farooq, P.E.
2. Revised Anchor Calculations and structural analysis, prepared by AL-Farooq Corporation, dated 04/08/04, signed and sealed by Humayoun Farooq, P.E.

D. QUALITY ASSURANCE

1. Miami Dade Building Code Compliance Office (BCCO).

E. MATERIAL CERTIFICATIONS

1. None

F. STATEMENTS

1. Statement letter of conformance and no financial interest, dated December 09, 2003, signed and sealed by Humayoun Farooq, P.E.

G. OTHER

1. Letter from the consultant stating that the product is in compliance with the Florida Building Code (FBC).

Theodore Berman, P.E.
Deputy Director, Product Control Division
NOA No 04-0204.05
Expiration Date: April 29, 2009
Approval Date: April 29, 2004

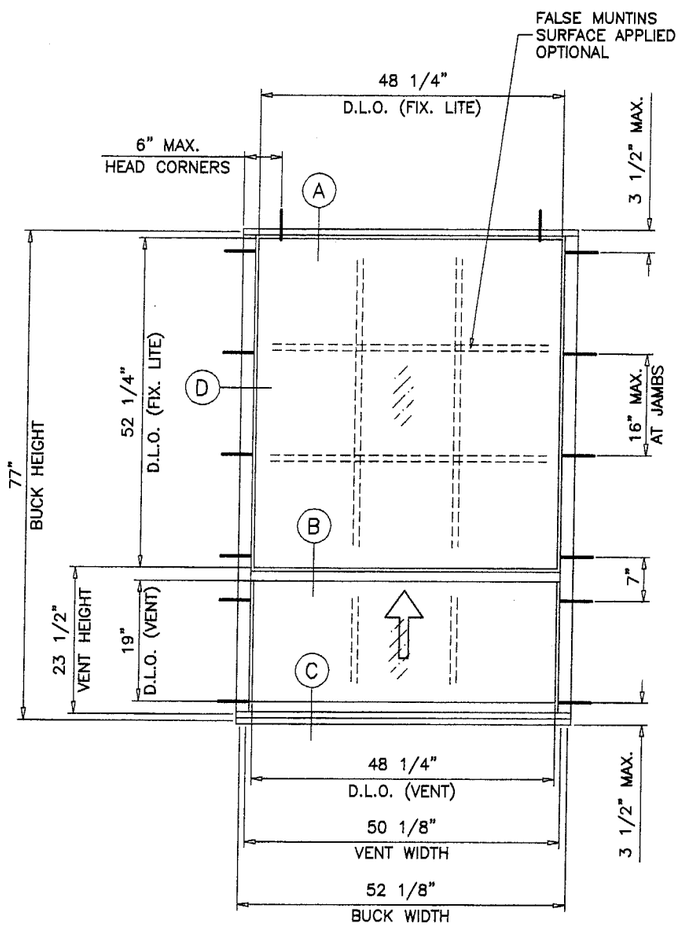

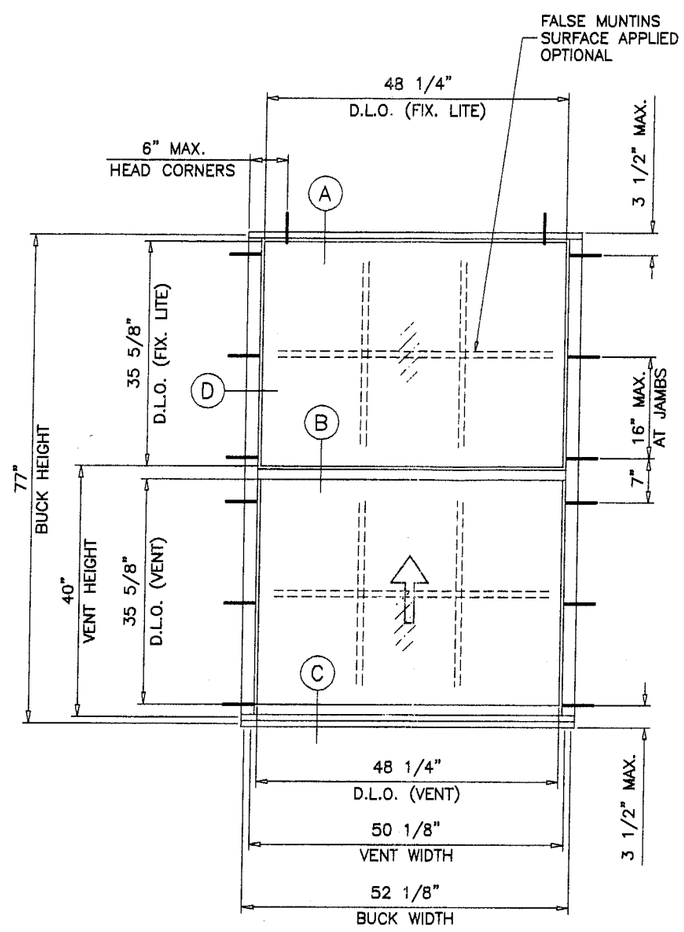

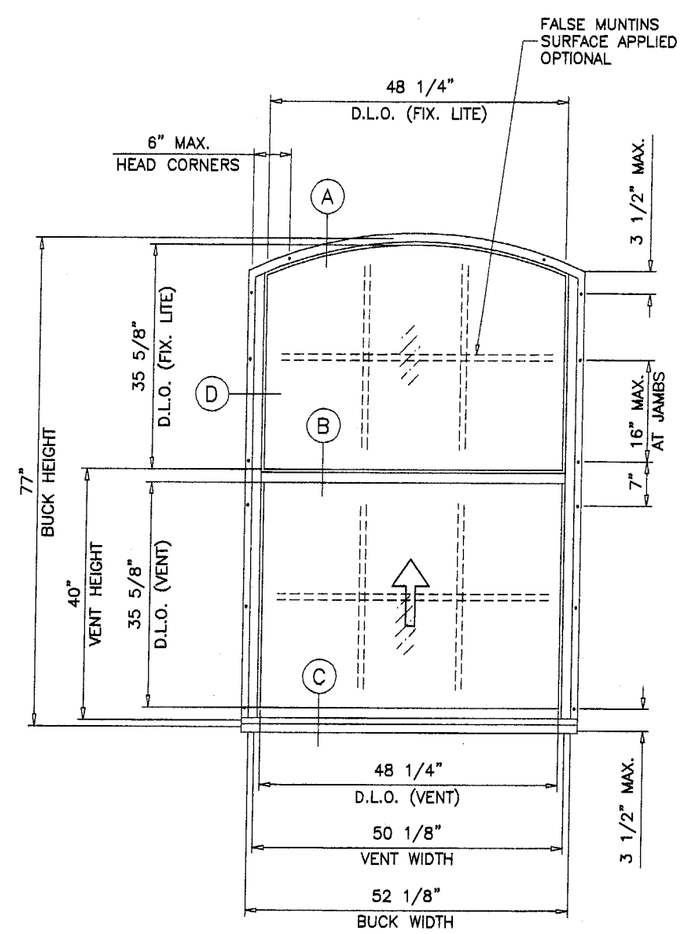

TYPICAL ELEVATION
TESTED UNITS

M40 XHP ALUMINUM SINGLE HUNG WINDOW NON-IMPACT

DESIGN LOAD RATINGS FOR THESE WINDOWS TO BE AS PER CHARTS SHOWN ON SHEETS 2 THRU 5.

INSTALLATION OF THIS PRODUCT IN THE HVHZ AREA REQUIRES THE USE OF APPROVED SHUTTERS OR EXTERNAL PROTECTION DEVICES COMPLYING WITH HVHZ REQUIREMENTS.

THIS PRODUCT IS DESIGNED TO COMPLY WITH THE HIGH VELOCITY HURRICANE ZONE OF THE 2001 FLORIDA BUILDING CODE.

WOOD BUCKS BY OTHERS, MUST BE ANCHORED PROPERLY TO TRANSFER LOADS TO THE STRUCTURE.

ANCHORS SHALL BE AS LISTED, SPACED AS SHOWN ON DETAILS. ANCHOR EMBEDMENT TO BASE MATERIAL SHALL BE BEYOND WALL DRESSING OR STUCCO.

ANCHORING OR LOADING CONDITIONS NOT SHOWN IN THESE DETAILS ARE NOT PART OF THIS APPROVAL.

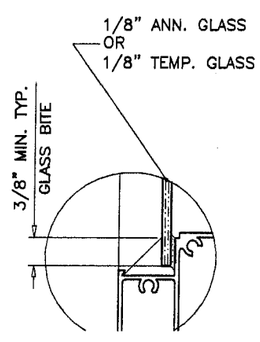

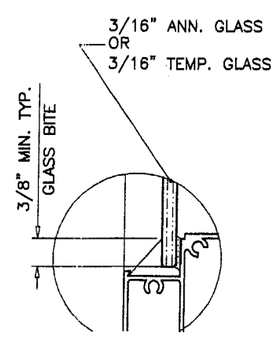

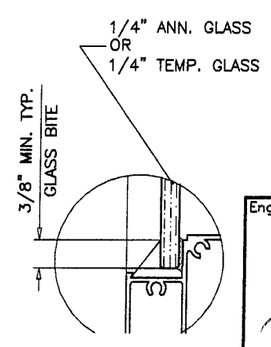

GLAZING OPTIONS

Approved as complying with the Florida Building Code
Date 04/29/04
NOA# 04-0204.05
Miami Dade Product Control Division
By:

Engr: DR. HUMAYOUN FAROOQ
STRUCTURES
FLA. PE # 16557
C.A.N. 3538

MAR 22 2004

AL-FAROOQ CORPORATION
ENGINEERS, PLANNERS & PRODUCT DESIGN
1235 SW 87 AVE
MIAMI, FLORIDA 33174
TEL. (305) 284-8100 FAX. (305) 262-6978
COMP-ANL\W03-110KL

M40 XHP ALUM SINGLE HUNG WINDOW (N.I.)

KINCO LTD.
5245 OLD KINGS ROAD
JACKSONVILLE, FL 32254
TEL. (800) 324-0244

revisions:

no	date	by	description
A	03.20.04		NO CHANGE THIS SHEET

date: 12-05-03
scale: 1/2"=1'-0"
dr. by: HAMID
chk. by:

drawing no.
W03-110

sheet 1 of 9

EQUAL LITES WINDOWS
DESIGN LOAD CAPACITY – PSF

BUCK DIMS.		FLANGE OR FIN FRAMES											
		1/8" ANN. GLASS		3/16" ANN. GLASS		1/4" ANN. GLASS		1/8" TEMP. GLASS		3/16" TEMP. GLASS		1/4" TEMP. GLASS	
WIDTH	HEIGHT	EXT.(+)	INT.(–)	EXT.(+)	INT.(–)	EXT.(+)	INT.(–)	EXT.(+)	INT.(–)	EXT.(+)	INT.(–)	EXT.(+)	INT.(–)
18–1/8"	25" (4)	68.3	78.4	68.3	125.0	68.3	167.0	68.3	210.0	68.3	210.0	68.3	210.0
25–1/2"		68.3	78.4	68.3	125.0	68.3	167.0	68.3	210.0	68.3	210.0	68.3	210.0
36"		68.3	78.4	68.3	125.0	68.3	167.0	68.3	170.2	68.3	171.5	68.3	171.5
52–1/8"		68.3	78.4	68.3	99.3	68.3	118.5	68.3	110.4	68.3	118.5	68.3	118.5
18–1/8"	37–3/8" (4)	68.3	78.4	68.3	125.0	68.3	167.0	68.3	210.0	68.3	210.0	68.3	210.0
25–1/2"		68.3	78.4	68.3	125.0	68.3	162.0	68.3	162.0	68.3	162.0	68.3	162.0
36"		62.2	62.2	68.3	114.3	68.3	114.7	68.3	114.7	68.3	114.7	68.3	114.7
52–1/8"		45.3	45.3	68.3	71.2	68.3	79.2	68.3	79.2	68.3	79.2	68.3	79.2
52–1/8"	37–3/8" (6)	X	X	X	X	X	X	X	X	68.3	110.8	68.3	118.9
18–1/8"	49–5/8" (6)	68.3	78.4	68.3	125.0	68.3	167.0	68.3	210.0	68.3	210.0	68.3	210.0
25–1/2"		68.3	76.9	68.3	125.0	68.3	167.0	68.3	183.0	68.3	183.0	68.3	183.0
36"		57.7	57.7	68.3	92.7	68.3	129.6	68.3	108.1	68.3	129.6	68.3	129.6
52–1/8"		33.1	33.1	57.8	57.8	68.3	83.5	64.2	64.2	68.3	89.5	68.3	89.5
52–1/8"	49–5/8" (8)	X	X	X	X	X	X	X	X	X	X	X	X
18–1/8"	54–7/8" (6)	68.3	78.4	68.3	125.0	68.3	167.0	68.3	210.0	68.3	210.0	68.3	210.0
25–1/2"		68.3	70.1	68.3	123.7	68.3	165.5	68.3	165.5	68.3	165.5	68.3	165.5
36"		52.5	52.5	68.3	84.5	68.3	116.0	68.3	103.5	68.3	117.2	68.3	117.2
52–1/8"		34.2	34.2	54.0	54.0	68.3	77.5	60.1	60.1	68.3	81.0	68.3	81.0
52–1/8"	54–7/8" (8)	X	X	X	X	X	X	X	X	68.3	84.1	68.3	96.1
18–1/8"	62" (6)	68.3	80.3	68.3	125.0	68.3	167.0	68.3	206.1	68.3	206.1	68.3	206.1
25–1/2"		63.2	63.2	68.3	106.7	68.3	146.5	68.3	146.5	68.3	146.5	68.3	146.5
36"		47.6	47.6	68.3	76.2	68.3	100.2	68.3	99.6	68.3	103.7	68.3	103.7
52–1/8"		32.4	32.4	50.2	50.2	68.0	68.0	55.7	55.7	68.3	71.6	68.3	71.6
52–1/8"	62" (8)	X	X	X	X	X	X	X	X	68.3	78.0	68.3	89.2
18–1/8"	71" (6)	68.3	68.5	68.3	125.0	68.3	167.0	68.3	179.9	68.3	179.9	68.3	179.9
25–1/2"		52.7	52.7	68.3	92.7	68.3	127.9	68.3	127.9	68.3	127.9	68.3	127.9
36"		43.3	43.3	68.3	68.5	68.3	86.3	68.3	90.6	68.3	90.6	68.3	90.6
52–1/8"		30.2	30.2	46.7	46.7	60.9	60.9	51.9	51.9	62.6	62.6	62.6	62.6
52–1/8"	71" (8)	X	X	X	X	X	X	X	X	68.3	72.6	68.3	83.0
18–1/8"	77" (6)	63.3	63.3	68.3	125.0	68.3	165.9	68.3	165.9	68.3	165.9	68.3	165.9
25–1/2"		48.4	48.4	68.3	85.9	68.3	117.9	68.3	117.9	68.3	117.9	68.3	117.9
36"		40.2	40.2	63.7	63.7	68.3	79.3	68.3	83.5	68.3	83.5	68.3	83.5
52–1/8"		28.4	28.4	45.0	45.0	57.4	57.4	50.0	50.0	57.7	57.7	57.7	57.7
52–1/8"	77" (8)	X	X	X	X	X	X	X	X	68.3	70.0	68.3	76.9

* NO. IN PARENTHESIS INDICATE NO. OF ANCHORS PER JAMB.

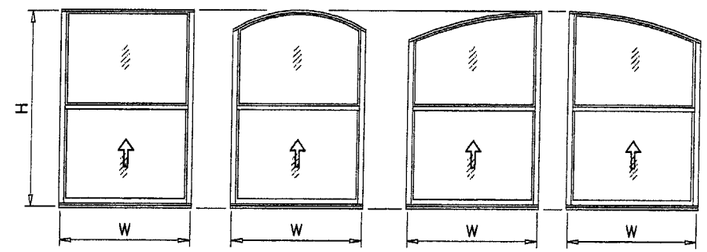

FLANGE FRAME WINDOWS

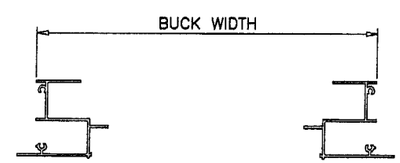

FIN FRAME WINDOWS

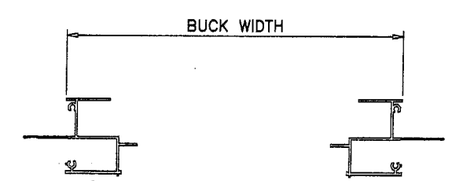

Approved as complying with the
Florida Building Code
Date 04/29/04
NOA#04-0204.05
Miami Dade Product Control
Division
By

Engr: DR. HUMAYOUN FAROOQ
STRUCTURES
FLA. PE # 16557
C.A.N. 3538

MAR 22 2004

AL–FAROOQ CORPORATION
ENGINEERS, PLANNERS & PRODUCT DESIGN
1235 SW 87 AVE
MIAMI, FLORIDA 33174
TEL. (305) 264–8100 FAX. (305) 262–6978

COMP–ANL\W03–110KL

M40 XHP ALUM SINGLE HUNG WINDOW (N.I.)

KINCO LTD.
5245 OLD KINGS ROAD
JACKSONVILLE, FL 32254
TEL. (800) 324–0244

revisions:

no	date	by	description
A	03.20.04		CHART REV. PER BCCO COMMENTS

date: 12–05–03
scale: 1/2"=1'–0"
dr. by: HAMID
chk. by:

drawing no.
W03–110

sheet 2 of 9

UNEQUAL LITES WINDOWS (ORIEL)
DESIGN LOAD CAPACITY - PSF

BUCK DIMS.		FLANGE OR FIN FRAMES											
		1/8" ANN. GLASS		3/16" ANN. GLASS		1/4" ANN. GLASS		1/8" TEMP. GLASS		3/16" TEMP. GLASS		1/4" TEMP. GLASS	
WIDTH	HEIGHT	EXT.(+)	INT.(-)	EXT.(+)	INT.(-)	EXT.(+)	INT.(-)	EXT.(+)	INT.(-)	EXT.(+)	INT.(-)	EXT.(+)	INT.(-)
18-1/8"	54-7/8" (6)	68.3	73.9	68.3	125.0	68.3	167.0	68.3	210.0	68.3	210.0	68.3	210.0
25-1/2"		60.6	60.6	68.3	100.2	68.3	141.6	68.3	165.5	68.3	165.5	68.3	165.5
36"		45.5	45.5	68.3	72.4	68.3	92.9	68.3	106.2	68.3	117.2	68.3	117.2
52-1/8"		31.3	31.3	48.5	48.5	64.0	64.0	60.9	60.9	68.3	79.2	68.3	81.0
52-1/8"	54-7/8" (8)	X	X	X	X	X	X	X	X	68.3	79.2	68.3	97.5
18-1/8"	62" (6)	61.5	61.5	68.3	125.0	68.3	167.0	68.3	206.1	68.3	206.1	68.3	206.1
25-1/2"		46.2	46.2	68.3	82.4	68.3	115.6	68.3	146.5	68.3	146.5	68.3	146.5
36"		38.6	38.6	61.2	61.2	68.3	76.8	68.3	103.7	68.3	103.7	68.3	103.7
52-1/8"		27.5	27.5	46.3	46.3	55.6	55.6	57.9	57.9	68.3	71.6	68.3	71.6
52-1/8"	62" (8)	X	X	X	X	X	X	X	X	68.3	75.2	68.3	92.6
18-1/8"	71" (6)	54.7	54.7	68.3	125.0	68.3	167.0	68.3	179.9	68.3	179.9	68.3	179.9
25-1/2"		34.5	34.5	66.9	66.9	68.3	95.0	68.3	127.9	68.3	127.9	68.3	127.9
36"		31.8	31.8	51.1	51.1	64.1	64.1	68.3	90.6	68.3	90.6	68.3	90.6
52-1/8"		24.2	24.2	39.8	39.8	48.2	48.2	56.1	56.1	62.6	62.6	62.6	62.6
52-1/8"	71" (8)	X	X	X	X	X	X	X	X	68.3	73.0	68.3	83.4
18-1/8"	77" (6)	52.5	52.5	68.3	125.0	68.3	165.9	68.3	165.9	68.3	165.9	68.3	165.9
25-1/2"		30.9	30.9	60.4	60.4	68.3	85.9	68.3	117.9	68.3	117.9	68.3	117.9
36"		28.0	28.0	43.8	43.8	56.4	56.4	68.3	83.5	68.3	83.5	68.3	83.5
52-1/8"		20.6	20.6	36.0	36.0	44.0	44.0	56.0	56.0	57.7	57.7	57.7	57.7
52-1/8"	77" (8)	X	X	X	X	X	X	X	X	68.3	72.8	68.3	76.9

* NO. IN PARENTHESIS INDICATE NO. OF ANCHORS PER JAMB.

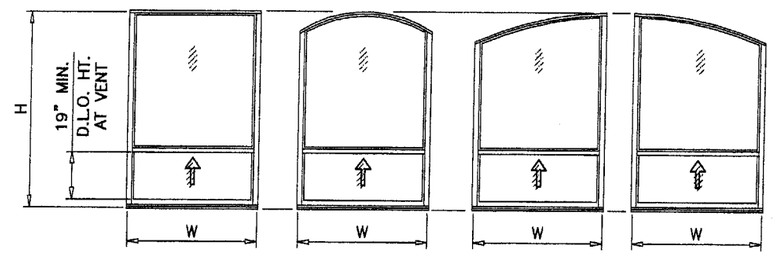

FLANGE FRAME WINDOWS

FIN FRAME WINDOWS

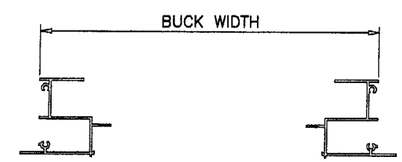

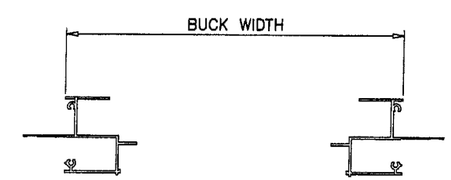

Approved as complying with the Florida Building Code
Date 04/29/04
NOA# 04-0204.05
Miami Dade Product Control Division
By

Engr: DR. HUMAYOUN FAROOQ
STRUCTURES
FLA. PE # 16557
C.A.N. 3538

MAR 2 2 2004

AL-FAROOQ CORPORATION
ENGINEERS, PLANNERS & PRODUCT DESIGN
1235 SW 87 AVE
MIAMI, FLORIDA 33174
TEL. (305) 264-8100 FAX. (305) 262-6978

COMP-ANL\W03-110KL

M40 XHP ALUM SINGLE HUNG WINDOW (N.I.)

KINCO LTD.
5245 OLD KINGS ROAD
JACKSONVILLE, FL 32254
TEL. (800) 324-0244

revisions:

no	date	by	description
A	03.20.04		CHART REV. PER BCCO COMMENTS

date: 12-05-03
scale: 1/2"=1'-0"
dr. by: HAMID
chk. by:

drawing no. W03-110

sheet 3 of 9

EQUAL LITES WINDOWS
DESIGN LOAD CAPACITY – PSF

BUCK DIMS.		FLANGE OR FIN FRAMES											
		1/8" ANN. GLASS		3/16" ANN. GLASS		1/4" ANN. GLASS		1/8" TEMP. GLASS		3/16" TEMP. GLASS		1/4" TEMP. GLASS	
WIDTH	HEIGHT	EXT.(+)	INT.(−)	EXT.(+)	INT.(−)	EXT.(+)	INT.(−)	EXT.(+)	INT.(−)	EXT.(+)	INT.(−)	EXT.(+)	INT.(−)
24"	28" (4)	68.3	78.4	68.3	125.0	68.3	167.0	68.3	210.0	68.3	210.0	68.3	210.0
28"		68.3	78.4	68.3	125.0	68.3	167.0	68.3	196.9	68.3	196.9	68.3	196.9
32"		68.3	78.4	68.3	125.0	68.3	167.0	68.3	172.3	68.3	172.3	68.3	172.3
36"		68.3	78.4	68.3	125.0	68.3	153.1	68.3	153.1	68.3	153.1	68.3	153.1
40"		68.3	78.4	68.3	123.3	68.3	137.8	68.3	137.0	68.3	137.8	68.3	137.8
44"		68.3	78.4	68.3	110.0	68.3	125.3	68.3	122.2	68.3	125.3	68.3	125.3
48"		68.3	78.4	68.3	99.2	68.3	114.9	68.3	110.3	68.3	114.9	68.3	114.9
52"		68.3	78.4	68.3	90.4	68.3	106.0	68.3	100.5	68.3	106.0	68.3	106.0
24"	36" (4)	68.3	78.4	68.3	125.0	68.3	167.0	68.3	178.7	68.3	178.7	68.3	178.7
28"		68.3	78.4	68.3	125.0	68.3	153.1	68.3	153.1	66.3	153.1	68.3	153.1
32"		68.3	76.5	68.3	125.0	68.3	134.0	68.3	134.0	68.3	134.0	68.3	134.0
36"		65.0	65.0	68.3	117.2	68.3	119.1	68.3	119.1	68.3	119.1	68.3	119.1
40"		58.3	58.3	68.3	102.1	68.3	107.2	68.3	107.2	68.3	107.2	68.3	107.2
44"		54.5	54.5	68.3	90.4	68.3	97.5	68.3	97.5	68.3	97.5	68.3	97.5
48"		50.9	50.9	68.3	81.1	68.3	89.3	68.3	89.3	68.3	89.3	68.3	89.3
52"		48.5	48.5	68.3	73.6	68.3	82.5	68.3	81.8	68.3	82.5	68.3	82.5
48"	36" (6)	X	X	X	X	68.3	117.2	X	X	68.3	126.2	68.3	134.0
52"		X	X	X	X	68.3	106.3	X	X	68.3	114.5	68.3	123.7
24"	44" (4)	68.3	78.4	68.3	125.0	68.3	146.2	68.3	146.2	68.3	146.2	68.3	146.2
28"		68.3	76.4	68.3	125.0	68.3	125.3	68.3	125.3	68.3	125.3	68.3	125.3
32"		67.4	67.4	68.3	109.6	68.3	109.6	68.3	109.6	68.3	109.6	68.3	109.6
36"		57.1	57.1	68.3	97.5	88.3	97.5	68.3	97.5	68.3	97.5	68.3	97.5
40"		50.8	50.8	68.3	87.7	68.3	87.7	68.3	87.7	68.3	87.7	68.3	87.7
44"		42.8	42.8	68.3	78.5	68.3	79.7	68.3	79.7	68.3	79.7	68.3	79.7
48"		39.1	39.1	68.3	70.0	68.3	73.1	68.3	73.1	68.3	73.1	68.3	73.1
52"		35.0	35.0	63.1	63.1	67.5	67.5	67.5	67.5	67.5	67.5	67.5	67.5
48"	44" (6)	X	X	X	X	68.3	101.1	X	X	68.3	108.8	68.3	109.6
52"		X	X	X	X	68.3	91.2	X	X	68.3	98.2	68.3	101.2
24"	52" (6)	68.3	76.9	68.3	125.0	68.3	167.0	68.3	185.5	68.3	185.5	68.3	185.5
28"		68.1	68.1	68.3	117.3	68.3	159.0	68.3	159.0	68.3	159.0	68.3	159.0
32"		62.6	62.6	68.3	100.3	68.3	139.2	68.3	128.1	68.3	139.2	68.3	139.2
36"		55.9	55.9	68.3	88.7	68.3	123.7	68.3	105.8	68.3	123.7	68.3	123.7
40"		46.3	46.3	68.3	79.5	68.3	110.0	68.3	90.1	68.3	111.3	68.3	111.3
44"		42.1	42.1	68.3	70.7	68.3	99.0	68.3	78.5	68.3	101.2	68.3	101.2
48"		38.3	38.3	62.6	62.6	68.3	90.1	68.3	69.5	68.3	92.8	68.3	92.8
52"		32.3	32.3	56.2	56.2	68.3	81.1	62.4	62.4	68.3	85.6	68.3	85.6
48"	52" (8)	X	X	X	X	X	X	X	X	68.3	97.4	68.3	111.3
52"		X	X	X	X	X	X	X	X	68.3	87.4	68.3	99.9
24"	60" (6)	67.4	67.4	68.3	120.3	68.3	160.8	68.3	160.8	68.3	160.8	68.3	160.8
28"		63.6	63.6	68.3	99.7	68.3	137.8	68.3	137.8	68.3	137.8	68.3	137.8
32"		55.7	55.7	68.3	87.1	68.3	120.1	68.3	120.6	68.3	120.6	68.3	120.6
36"		48.7	48.7	68.3	78.1	68.3	104.3	68.3	100.5	68.3	107.2	68.3	107.2
40"		44.3	44.3	68.3	70.8	68.3	92.0	68.3	84.4	68.3	96.5	68.3	96.5
44"		40.7	40.7	65.0	65.0	68.3	83.3	68.3	72.7	68.3	87.7	68.3	87.7
48"		36.0	36.0	57.5	57.5	68.3	76.5	63.9	63.9	68.3	80.4	68.3	80.4
52"		33.1	33.1	51.3	51.3	68.3	70.6	57.0	57.0	68.3	74.2	68.3	74.2
48"	60" (8)	X	X	X	X	X	X	X	X	68.3	89.5	68.3	102.3
52"		X	X	X	X	X	X	X	X	68.3	79.8	68.3	91.2
24"	72" (6)	54.0	54.0	68.3	98.6	68.3	134.0	68.3	134.0	68.3	134.0	68.3	134.0
28"		51.5	51.5	68.3	83.6	68.3	114.4	68.3	114.9	68.3	114.9	68.3	114.9
32"		46.5	46.5	68.3	74.3	68.3	96.9	68.3	100.5	68.3	100.5	68.3	100.5
36"		42.8	42.8	67.7	67.7	68.3	85.1	68.3	89.3	68.3	89.3	68.3	89.3
40"		38.7	38.7	61.5	61.5	68.3	76.8	68.3	79.9	68.3	80.4	68.3	80.4
44"		35.1	35.1	56.5	56.5	68.3	70.3	67.6	67.6	68.3	73.1	68.3	73.1
48"		32.4	32.4	52.2	52.2	65.2	65.2	58.6	58.6	67.0	67.0	67.0	67.0
52"		30.0	30.0	46.5	46.5	60.4	60.4	51.7	51.7	61.8	61.8	61.8	61.8
48"	72" (8)	X	X	X	X	X	X	X	X	68.3	82.0	68.3	89.3
52"		X	X	X	X	X	X	X	X	68.3	72.4	68.3	82.5

* NO. IN PARENTHESIS INDICATE NO. OF ANCHORS PER JAMB.

EQUAL LITES WINDOWS
DESIGN LOAD CAPACITY – PSF

BUCK DIMS.		FLANGE OR FIN FRAMES											
		1/8" ANN. GLASS		3/16" ANN. GLASS		1/4" ANN. GLASS		1/8" TEMP. GLASS		3/16" TEMP. GLASS		1/4" TEMP. GLASS	
WIDTH	HEIGHT	EXT.(+)	INT.(−)	EXT.(+)	INT.(−)	EXT.(+)	INT.(−)	EXT.(+)	INT.(−)	EXT.(+)	INT.(−)	EXT.(+)	INT.(−)
24"	77" (6)	50.1	50.1	68.3	91.7	68.3	125.3	68.3	125.3	68.3	125.3	68.3	125.3
28"		48.0	48.0	68.3	78.3	68.3	106.1	68.3	107.4	68.3	107.4	68.3	107.4
32"		43.9	43.9	68.3	69.7	68.3	90.2	68.3	94.0	68.3	94.0	68.3	94.0
36"		40.2	40.2	63.7	63.7	68.3	79.3	68.3	83.5	68.3	83.5	68.3	83.5
40"		36.4	36.4	59.1	59.1	68.3	72.5	68.3	75.2	68.3	75.2	68.3	75.2
44"		33.2	33.2	54.1	54.1	66.8	66.8	66.4	66.4	68.3	68.3	68.3	68.3
48"		30.5	30.5	50.0	50.0	61.6	61.6	57.2	57.2	62.6	62.6	62.6	62.6
52"		28.5	28.5	45.2	45.2	57.6	57.6	50.2	50.2	57.8	57.8	57.8	57.8
48"	77" (8)	X	X	X	X	X	X	X	X	68.3	80.0	68.3	83.5
52"		X	X	X	X	X	X	X	X	68.3	70.3	68.3	77.1

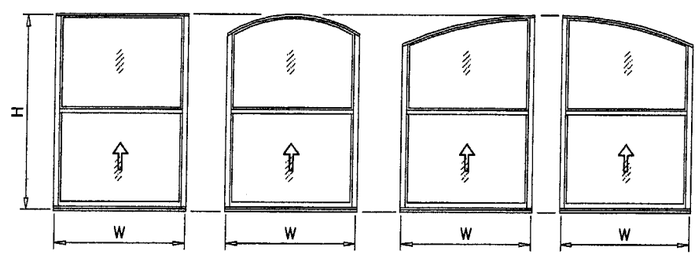

FLANGE FRAME WINDOWS

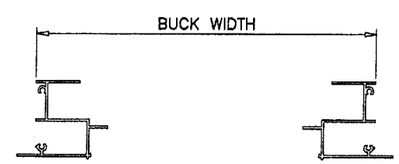

FIN FRAME WINDOWS

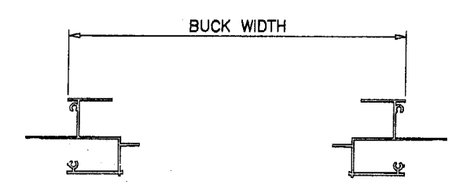

Approved as complying with the Florida Building Code
Date 04/29/04
NOA# 04-0204.05
Miami Dade Product Control Division
By

Engr: DR. HUMAYOUN FAROOQ
STRUCTURES
FLA. PE # 16557
C.A.N. 3538

MAR 2 2 2004

AL-FAROOQ CORPORATION
ENGINEERS, PLANNERS & PRODUCT DESIGN
1235 SW 87 AVE
MIAMI, FLORIDA 33174
TEL. (305) 264-8100 FAX. (305) 262-6978
COMP-ANL\W03-110KL

M40 XHP ALUM SINGLE HUNG WINDOW (N.I.)

KINCO LTD.
5245 OLD KINGS ROAD
JACKSONVILLE, FL 32254
TEL. (800) 324-0244

revisions:

no	date	by	description
A	03.20.04		CHART REV. PER BCCO COMMENTS

date: 12-05-03
scale: 1/2"=1'-0"
dr. by: HAMID
chk. by:

drawing no.
W03-110

sheet 4 of 9

EQUAL LITES WINDOWS
DESIGN LOAD CAPACITY - PSF

BUCK DIMS.		FLANGE OR FIN FRAMES											
		1/8" ANN. GLASS		3/16" ANN. GLASS		1/4" ANN. GLASS		1/8" TEMP. GLASS		3/16" TEMP. GLASS		1/4" TEMP. GLASS	
WIDTH	HEIGHT	EXT.(+)	INT.(-)	EXT.(+)	INT.(-)	EXT.(+)	INT.(-)	EXT.(+)	INT.(-)	EXT.(+)	INT.(-)	EXT.(+)	INT.(-)
24"	52" (6)	67.1	67.1	68.3	119.7	68.3	167.0	68.3	185.5	68.3	185.5	68.3	185.5
28"		63.4	63.4	68.3	99.3	68.3	140.1	68.3	159.0	68.3	159.0	68.3	159.0
32"		55.4	55.4	68.3	86.8	68.3	119.5	68.3	130.4	68.3	139.2	68.3	139.2
36"		48.5	48.5	68.3	77.8	68.3	103.8	68.3	107.4	68.3	123.7	68.3	123.7
40"		44.2	44.2	68.3	70.6	68.3	91.7	68.3	91.3	68.3	111.3	68.3	111.3
44"		40.6	40.6	64.8	64.8	68.3	82.9	68.3	79.4	68.3	101.2	68.3	101.2
48"		35.9	35.9	57.8	57.8	68.3	76.2	68.3	70.2	68.3	92.8	68.3	92.8
52"		33.0	33.0	52.7	52.7	68.3	70.2	62.9	62.9	68.3	85.6	68.3	85.6
40"	52" (8)	X	X	X	X	X	X	68.3	91.3	68.3	127.8	68.3	146.0
44"		X	X	X	X	X	X	68.3	79.4	68.3	111.1	68.3	127.0
48"		X	X	X	X	X	X	68.3	70.2	68.3	98.3	68.3	112.3
52"		X	X	X	X	X	X	62.9	62.9	68.3	88.1	68.3	100.7
24"	60" (6)	50.6	50.6	68.3	92.6	68.3	132.7	68.3	160.8	68.3	160.8	68.3	160.8
28"		48.4	48.4	68.3	79.0	68.3	107.2	68.3	137.8	68.3	137.8	68.3	137.8
32"		44.3	44.3	68.3	70.4	68.3	91.0	68.3	120.6	68.3	120.6	68.3	120.6
36"		40.5	40.5	64.3	64.3	68.3	80.0	68.3	105.8	68.3	107.2	68.3	107.2
40"		36.7	36.7	59.4	59.4	68.3	73.2	68.3	88.3	68.3	96.5	68.3	96.5
44"		33.5	33.5	54.4	54.4	67.3	67.3	68.3	75.6	68.3	87.7	68.3	87.7
48"		30.7	30.7	50.4	50.4	62.1	62.1	66.1	66.1	68.3	80.4	68.3	80.4
52"		28.7	28.7	46.8	46.8	58.0	58.0	58.8	58.8	68.3	74.2	68.3	74.2
40"	60" (8)	X	X	X	X	X	X	68.3	88.3	68.3	123.6	68.3	128.6
44"		X	X	X	X	X	X	68.3	75.6	68.3	105.9	68.3	116.9
48"		X	X	X	X	X	X	66.1	66.1	68.3	92.6	68.3	105.8
52"		X	X	X	X	X	X	58.8	58.8	68.3	82.3	68.3	94.0
24"	72" (6)	35.2	35.2	68.3	71.9	68.3	102.8	68.3	134.0	68.3	134.0	68.3	134.0
28"		35.3	35.3	59.7	59.7	68.3	80.3	68.3	114.9	68.3	114.9	68.3	114.9
32"		33.1	33.1	52.2	52.2	68.3	69.3	68.3	100.5	68.3	100.5	68.3	100.5
36"		31.2	31.2	50.3	50.3	62.8	62.8	68.3	89.3	68.3	89.3	68.3	89.3
40"		28.6	28.6	47.0	47.0	57.9	57.9	68.3	80.4	68.3	80.4	68.3	80.4
44"		26.5	26.5	46.4	46.4	53.5	53.5	68.3	73.1	68.3	73.1	68.3	73.1
48"		25.3	25.3	43.4	43.4	50.6	50.6	64.5	64.5	67.0	67.0	67.0	67.0
52"		23.6	23.6	38.9	38.9	47.8	47.8	56.3	56.3	61.8	61.8	61.8	61.8
40"	72" (8)	X	X	X	X	X	X	68.3	88.2	68.3	107.2	68.3	107.2
44"		X	X	X	X	X	X	68.3	74.8	68.3	97.5	68.3	97.5
48"		X	X	X	X	X	X	64.5	64.5	68.3	89.3	68.3	89.3
52"		X	X	X	X	X	X	56.3	56.3	68.3	78.8	68.3	82.5
24"	77" (6)	31.2	31.2	68.3	68.3	68.3	99.9	68.3	124.8	68.3	125.3	68.3	125.3
28"		29.4	29.4	53.3	53.3	68.3	74.6	68.3	107.4	68.3	107.4	68.3	107.4
32"		29.9	29.9	47.2	47.2	63.2	63.2	68.3	94.0	68.3	94.0	68.3	94.0
36"		28.0	28.0	43.8	43.8	56.4	56.4	68.3	83.5	68.3	83.5	68.3	83.5
40"		26.3	26.3	44.3	44.3	52.9	52.9	68.3	75.2	68.3	75.2	68.3	75.2
44"		24.9	24.9	42.2	42.2	49.2	49.2	68.3	68.3	68.3	68.3	68.3	68.3
48"		23.1	23.1	37.9	37.9	46.6	46.6	62.6	62.6	62.6	62.6	62.6	62.6
52"		20.7	20.7	36.0	36.0	44.1	44.1	56.2	56.2	57.8	57.8	57.8	57.8
40"	77" (8)	X	X	X	X	X	X	68.3	88.2	68.3	100.2	68.3	100.2
44"		X	X	X	X	X	X	68.3	74.8	68.3	91.1	68.3	91.1
48"		X	X	X	X	X	X	64.5	64.5	68.3	83.5	68.3	83.5
52"		X	X	X	X	X	X	56.2	56.2	68.3	77.1	68.3	77.1

* NO. IN PARENTHESIS INDICATE NO. OF ANCHORS PER JAMB.

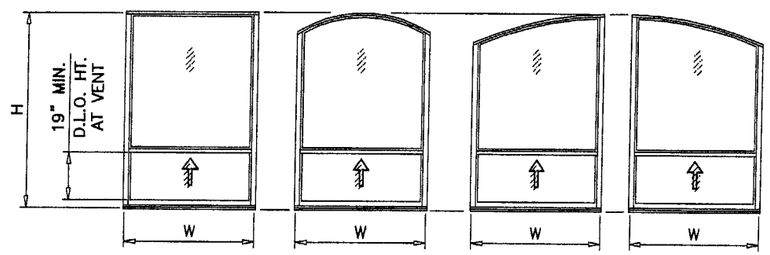

FLANGE FRAME WINDOWS

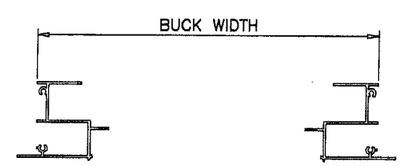

FIN FRAME WINDOWS

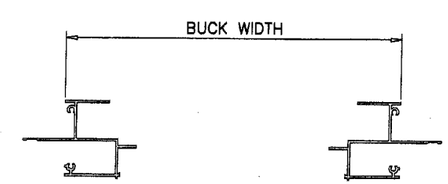

Approved as complying with the Florida Building Code
Date 04/29/04
NOA# 04-0204.05
Miami Dade Product Control Division
By

Engr: DR. HUMAYOUN FAROOQ
STRUCTURES
FLA. PE # 16557
C.A.N. 3538

MAR 2 2 2004

AL-FAROOQ CORPORATION
ENGINEERS, PLANNERS & PRODUCT DESIGN
1235 SW 87 AVE
MIAMI, FLORIDA 33174
TEL. (305) 264-8100 FAX. (305) 262-6978
COMP-ANL\W03-110KL

M40 XHP ALUM SINGLE HUNG WINDOW (N.I.)

KINCO LTD.
5245 OLD KINGS ROAD
JACKSONVILLE, FL 32254
TEL. (800) 324-0244

revisions:

no	date	by	description
A	03.20.04		CHART REV. PER BCCO COMMENTS

date: 12-05-03
scale: 1/2"=1'-0"
dr. by: HAMID
chk. by:

drawing no.
W03-110

sheet 5 of 9

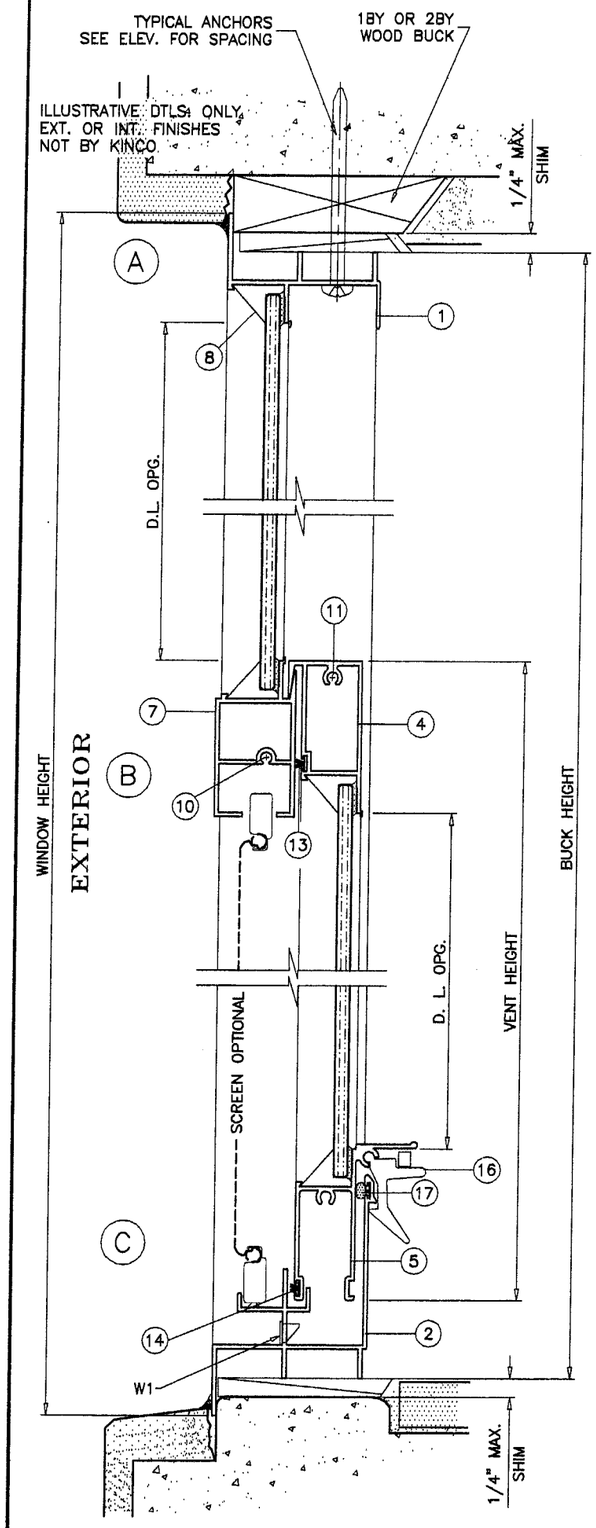

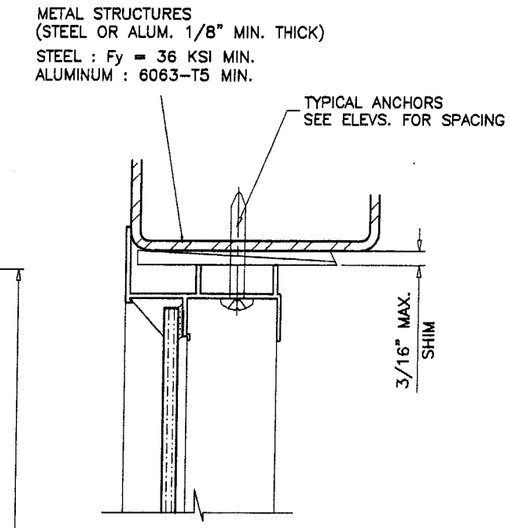

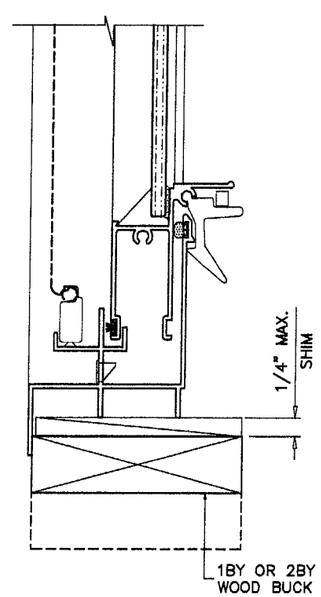

WOOD BUCKS NOT BY KINCO, MUST SUSTAIN LOADS IMPOSED BY GLAZING SYSTEM AND TRANSFER THEM TO THE BUILDING STRUCTURE.

TYPICAL ANCHORS: SEE ELEV. FOR SPACING

1/4" TAPCONS

INTO 2BY WOOD BUCKS OR WOOD STRUCTURE
1-1/4" MIN. PENETRATION INTO WOOD

THRU 1BY BUCKS INTO MASONRY OR DIRECTLY INTO MASONRY
1-1/4" MIN. EMBED INTO CONC. OR MASONRY

#12 TEKS OR SELF DRILLING SCREWS

INTO METAL STRUCTURES (1/8" MIN. THICKNESS)
(3/16" MAX. SHIM SPACE)

#10 SMS OR SELF DRILLING SCREWS

INTO DADE COUNTY APPROVED MULLIONS
(NO SHIM SPACE)

WEEPHOLES:

W1 = 1" X 1/4" WEEP HOLE WITH PLASTIC BAFFLE
AT 5" FROM EACH END

Approved as complying with the Florida Building Code
Date 04/29/04
NOA# 04-0204.05
Miami Dade Product Control Division
By

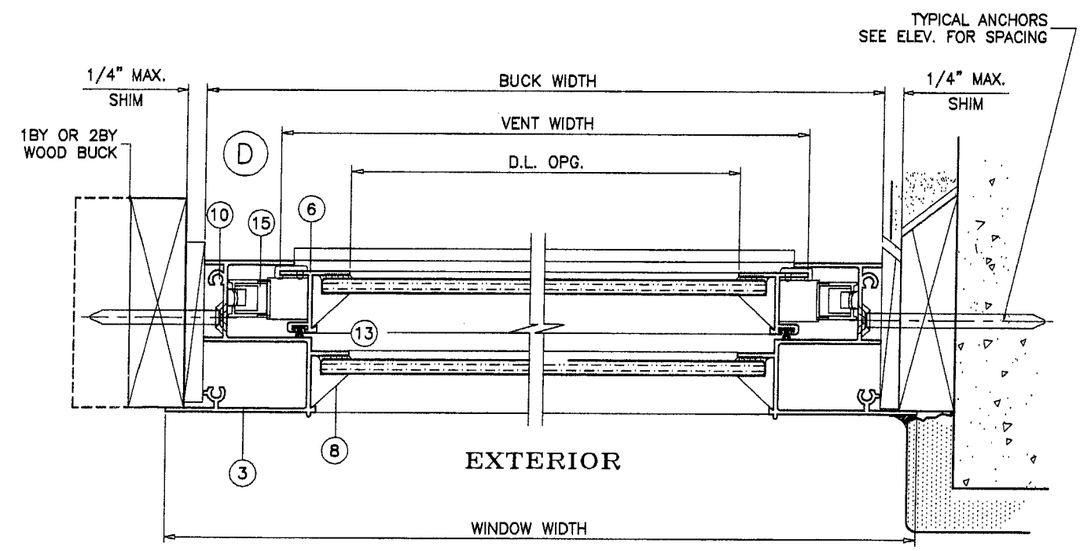

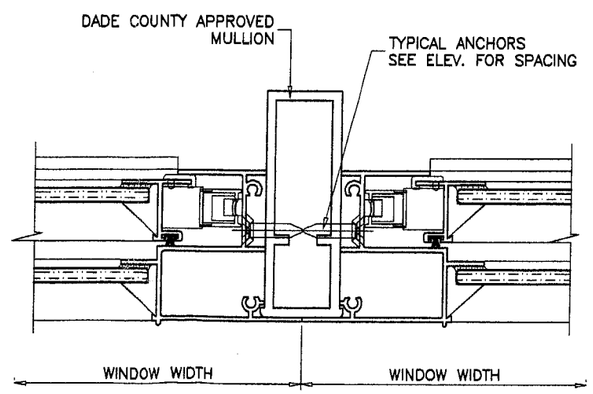

FLANGE FRAME WINDOW

Engr: DR. HUMAYOUN FAROOQ
STRUCTURES
FLA. PE # 16557
C.A.N. 3538

MAR 22 2004

AL-FAROOQ CORPORATION
ENGINEERS, PLANNERS & PRODUCT DESIGN
1235 SW 87 AVE
MIAMI, FLORIDA 33174
TEL (305) 264-8100 FAX. (305) 262-6978
COMP-ANL\W03-110KL

M40 XHP ALUM SINGLE HUNG WINDOW (N.I.)

KINCO LTD.
5245 OLD KINGS ROAD
JACKSONVILLE, FL 32254
TEL. (800) 324-0244

revisions:

no	date	by	description
A	03.20.04		ANCHOR REV. PER BCCO COMMENTS

date: 12-05-03
scale: 1/2" = 1"
dr. by: HAMID
chk. by:

drawing no.
W03-110

sheet 6 of 9

WOOD STRUCTURE NOT BY KINCO, MUST SUSTAIN LOADS IMPOSED BY GLAZING SYSTEM AND TRANSFER THEM TO THE BUILDING STRUCTURE.

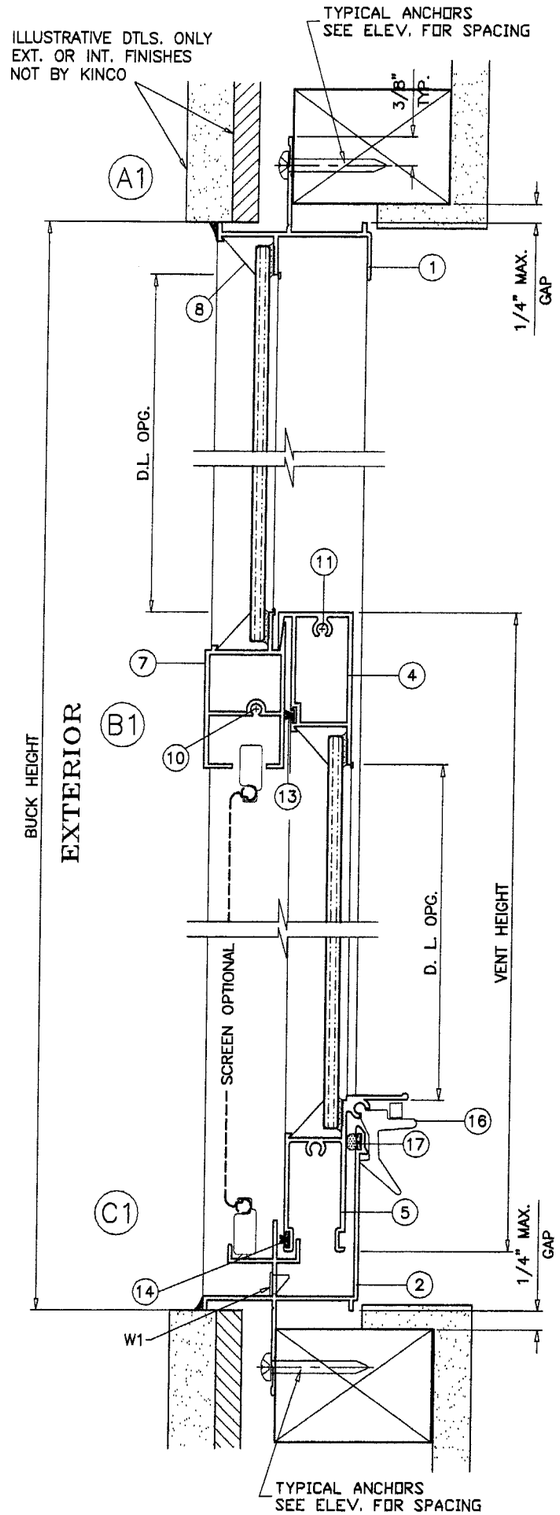

TYPICAL ANCHORS: SEE ELEV. FOR SPACING

#10 SMS

INTO WOOD STRUCTURES
1-1/4" MIN. PENETRATION INTO WOOD

#10 SMS OR SELF DRILLING SCREWS

INTO DADE COUNTY APPROVED MULLIONS
(NO SHIM SPACE)

WEEPHOLES:

W1 = 1" X 1/4" WEEP HOLE WITH PLASTIC BAFFLE
AT 5" FROM EACH END

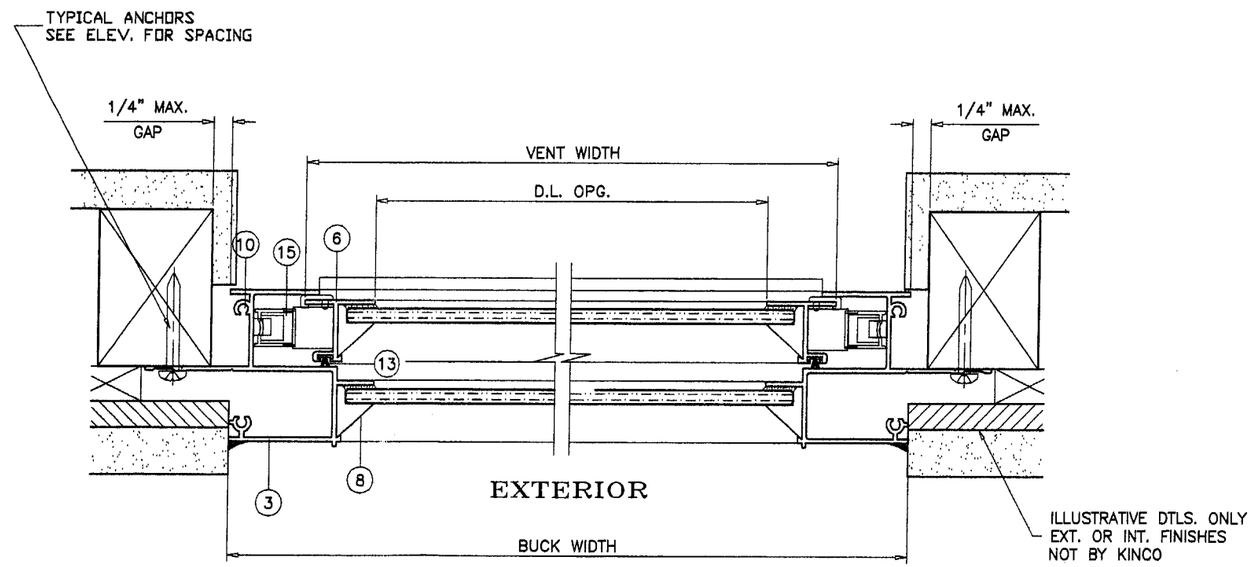

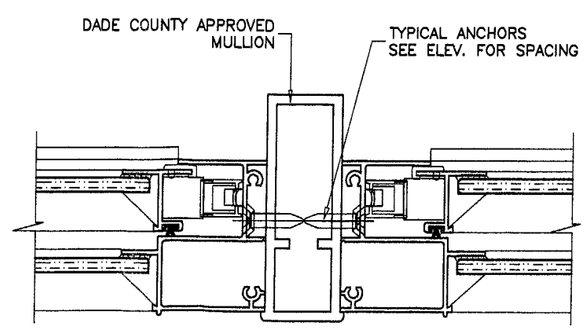

Approved as complying with the Florida Building Code
Date 04/29/04
NOA# 04-0204.05
Miami Dade Product Control Division
By

Engr: DR. HUMAYOUN FAROOQ
STRUCTURES
FLA. PE # 16557
C.A.N. 3538

MAR 2 2 2004

FIN FRAME WINDOW

AL-FAROOQ CORPORATION
ENGINEERS, PLANNERS & PRODUCT DESIGN
1235 SW 87 AVE
MIAMI, FLORIDA 33174
TEL. (305) 264-8100 FAX. (305) 262-6978

COMP-ANL\W03-110KL

M40 XHP ALUM SINGLE HUNG WINDOW (N.I.)

KINCO LTD.
5245 OLD KINGS ROAD
JACKSONVILLE, FL 32254
TEL. (800) 324-0244

revisions:

no	date	by	description
A	03.20.04		NO CHANGE THIS SHEET

date: 12-05-03
scale: 1/2" = 1"
dr. by: HAMID
chk. by:

drawing no.
W03-110

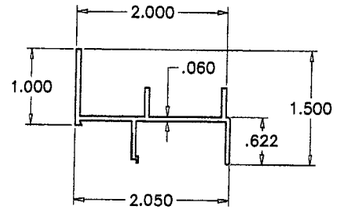

1 FRAME HEAD (FLANGE)

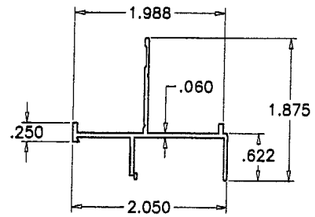

1A FRAME HEAD (FIN)

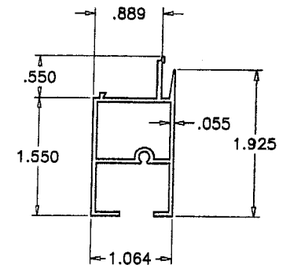

7 FIXED MEETING RAIL

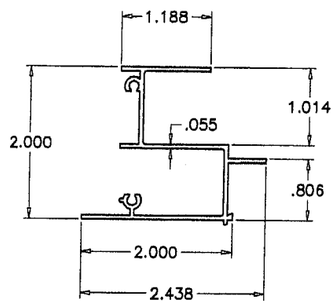

3 FRAME JAMB (FLANGE)

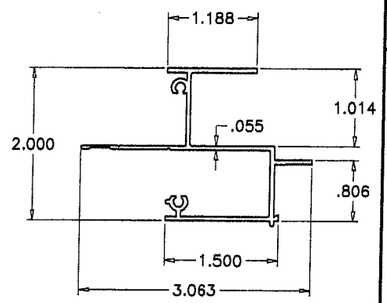

3A FRAME JAMB (FIN)

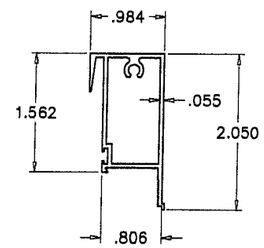

4 VENT TOP RAIL

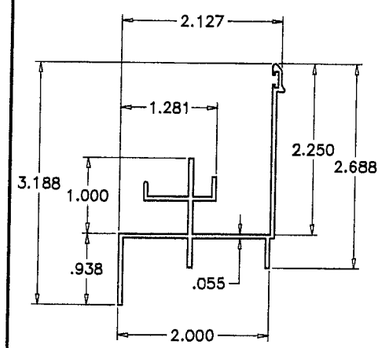

2 FRAME SILL (FLANGE)

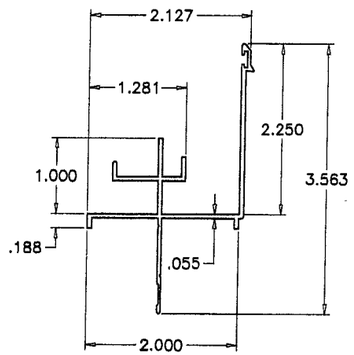

2A FRAME SILL (FIN)

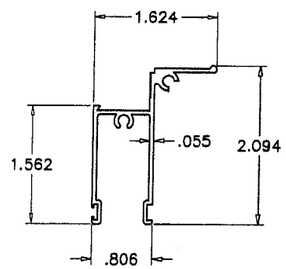

5 VENT BOTTOM RAIL

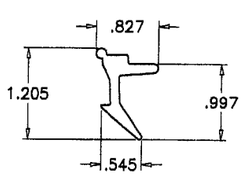

16 LATCH

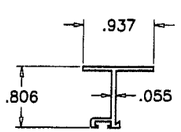

6 VENT SIDE RAIL

ITEM NO.	PART NO.	QUANTITY	DESCRIPTION	MATERIAL	MANF./SUPPLIER/REMARKS
1	KCO-107	1	FRAME HEAD (FLANGE)	6063-T6	–
1A	KCO-101	1	FRAME HEAD (FIN)	6063-T6	–
2	KCO-293	1	FRAME SILL (FLANGE)	6063-T6	–
2A	KCO-294	1	FRAME SILL (FIN)	6063-T6	–
3	KCO-263	2	FRAME JAMB (FLANGE)	6063-T6	–
3A	KCO-259	2	FRAME JAMB (FIN)	6063-T5	–
4	KCO-268	1	VENT TOP RAIL	6063-T6	–
5	KCO-269	1	VENT BOTTOM RAIL	6063-T6	–
6	KCO-262	2	VENT SIDE RAIL	6063-T6	–
7	KCO-267	1	FIXED MEETING RAIL	6063-T6	–
8	05-023	4/ LITE	GLAZING BEAD	ALUMINUM	–
9	5731	AS REQD.	GLAZING COMPOUND	SILICONE	SCHNEE-MOREHEAD
10	–	AS REQD.	FRAME ASSEMBLY SCREW	–	#8 X 5/8" PHPH SMS
11	–	AS REQD.	VENT ASSEMBLY SCREW	–	#8 X 5/8" PHPH SMS
12	–	–	–	–	–
13	–	AS REQD.	FIN SEAL WEATHERSTRIPPING	–	ULTRAFAB .210X.187 OR EQUIV.
14	–	–	–	–	–
15	–	2	BLOCK AND TACKLE BALANCE	–	CALDWELL
16	L-049	2/ VENT	SNAP LATCH 3" LONG W/ SPRING	NYLON	9" FROM EACH END (HUGHES SUPPLY)
17	U-4333	AS REQD.	BULB WEATHERSTRIPPING		Q-LON .300X.190
18	L-045	2	VENT TOP GUIDE	NYLON	ASHLAND PRODUCTS
19	L-046	2	VENT BOTTOM GUIDE	NYLON	ASHLAND PRODUCTS
20	–	2	BALANCE BRACKET	6063-T6	–

Approved as complying with the Florida Building Code
Date: 04/29/04
NOA# 04-0204.05
Miami Dade Product Control Division
By: [signature]

Engr: DR. HUMAYOUN FAROOQ
STRUCTURES
FLA. PE # 16557
C.A.N. 3538

MAR 2 2 2004

AL-FAROOQ CORPORATION
ENGINEERS, PLANNERS & PRODUCT DESIGN
1235 SW 87 AVE
MIAMI, FLORIDA 33174
TEL. (305) 264-8100 FAX. (305) 262-6978
COMP-ANL\W03-110KL

M40 XHP ALUM SINGLE HUNG WINDOW (N.I.)

KINCO LTD.
5245 OLD KINGS ROAD
JACKSONVILLE, FL 32254
TEL. (800) 324-0244

revisions:

no	date	by	description
A	03.20.04		NO CHANGE THIS SHEET

date: 12-05-03
scale: 1/2" = 1"
dr. by: HAMID
chk. by:

drawing no.
W03-110

sheet 8 of 9

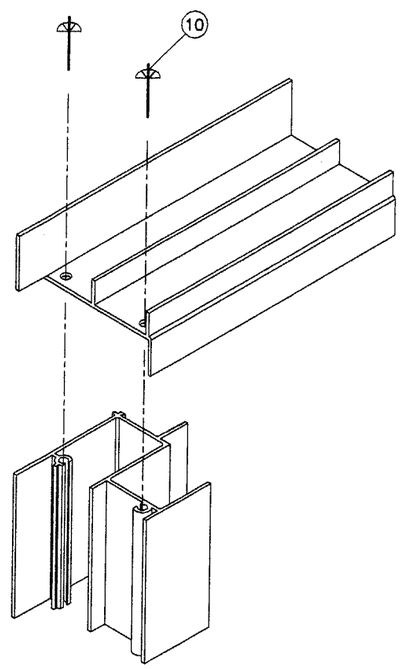

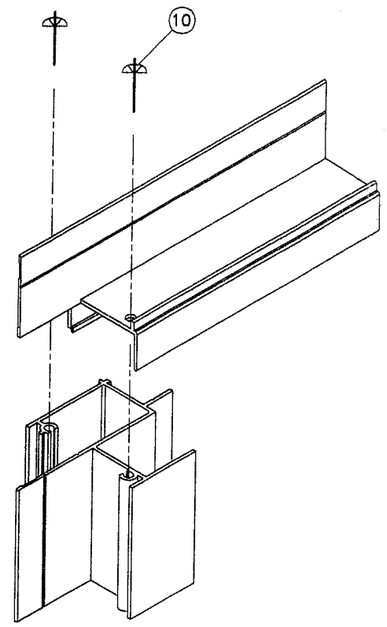

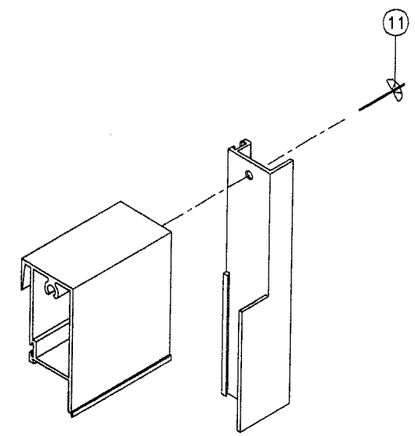

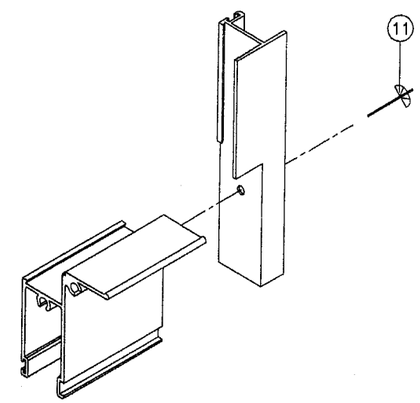

VENT CORNER DETAIL

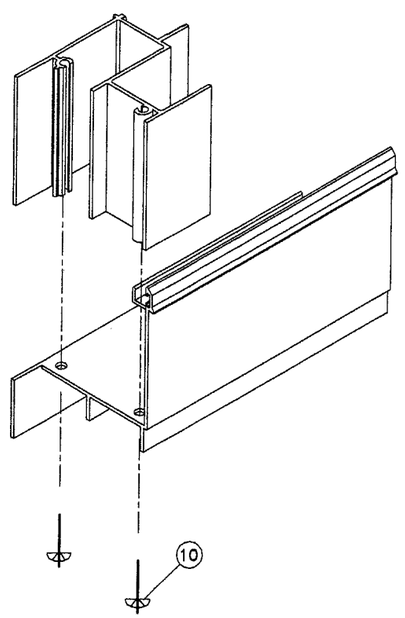

FRAME CORNERS (FLANGE)

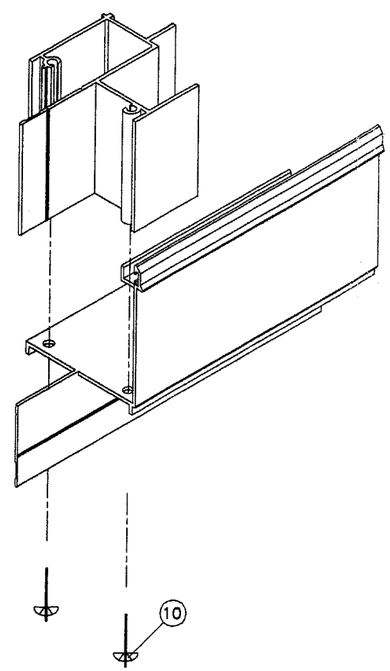

FRAME CORNERS (FIN)

Approved as complying with the
Florida Building Code
Date 04/29/04
NOA# 04-0204.05
Miami Dade Product Control
Division
By

Engr: DR. HUMAYOUN FAROOQ
STRUCTURES
FLA. PE # 16557
C.A.N. 3538

MAR 2 2 2004

M40 XHP ALUM SINGLE HUNG WINDOW (N.I.)

KINCO LTD.
5245 OLD KINGS ROAD
JACKSONVILLE, FL 32254
TEL (800) 324-0244

AL-FAROOQ CORPORATION
ENGINEERS, PLANNERS & PRODUCT DESIGN
1235 SW 87 AVE
MIAMI, FLORIDA 33174
TEL (305) 264-8100 FAX. (305) 262-6978

COMP-ANL\W03-110KL

revisions:

no	date	by	description
A	03.20.04		NO CHANGE THIS SHEET

date: 12-05-03
scale: 1/2" = 1"
dr. by: HAMID
chk. by:

drawing no.
W03-110

sheet 9 of 9