MIAMI-DADE

BUILDING CODE COMPLIANCE OFFICE (BCCO)
PRODUCT CONTROL DIVISION

MIAMI-DADE COUNTY, FLORIDA
METRO-DADE FLAGLER BUILDING
140 WEST FLAGLER STREET, SUITE 1603
MIAMI, FLORIDA 33130-1563
(305) 375-2901 FAX (305) 375-2908

NOTICE OF ACCEPTANCE (NOA)

Vistawall Architectural Products
803 Airport Road
Terrell, TX 75160

SCOPE:
This NOA is being issued under the applicable rules and regulations governing the use of construction materials. The documentation submitted has been reviewed by Miami-Dade County Product Control Division and accepted by the Board of Rules and Appeals (BORA) to be used in Miami Dade County and other areas where allowed by the Authority Having Jurisdiction (AHJ).

This NOA shall not be valid after the expiration date stated below. The Miami-Dade County Product Control Division (In Miami Dade County) and/or the AHJ (in areas other than Miami Dade County) reserve the right to have this product or material tested for quality assurance purposes. If this product or material fails to perform in the accepted manner, the manufacturer will incur the expense of such testing and the AHJ may immediately revoke, modify, or suspend the use of such product or material within their jurisdiction. BORA reserves the right to revoke this acceptance, if it is determined by Miami-Dade County Product Control Division that this product or material fails to meet the requirements of the applicable building code.

This product is approved as described herein, and has been designed to comply with the Florida Building Code, including the High Velocity Hurricane Zone.

DESCRIPTION: Series FG-5000 Flush Glazed Aluminum Window Wall System

APPROVAL DOCUMENT: Drawing No. **FG-5000_02 Protocols: PA 201/202/203**, titled "FG-5000 Window Wall System", sheets 1 through 10 of 10, dated 9/11/03, sheets 4 & 6 with revision A dated 1/3/04, prepared by the manufacturer, signed and sealed by Lewis A. Waldrop, P.E., bearing the Miami-Dade County Product Control Approval stamp with the Notice of Acceptance number and approval date by the Miami-Dade County Product Control Division.

MISSILE IMPACT RATING: Large and Small Missile Impact Resistant

LABELING: Each unit shall bear a permanent label with the manufacturer's name or logo, city, state and following statement: "Miami-Dade County Product Control Approved", unless otherwise noted herein.

RENEWAL of this NOA shall be considered after a renewal application has been filed and there has been no change in the applicable building code negatively affecting the performance of this product.

TERMINATION of this NOA will occur after the expiration date or if there has been a revision or change in the materials, use, and/or manufacture of the product or process. Misuse of this NOA as an endorsement of any product, for sales, advertising or any other purposes shall automatically terminate this NOA. Failure to comply with any section of this NOA shall be cause for termination and removal of NOA.

ADVERTISEMENT: The NOA number preceded by the words Miami-Dade County, Florida, and followed by the expiration date may be displayed in advertising literature. If any portion of the NOA is displayed, then it shall be done in its entirety.

INSPECTION: A copy of this entire NOA shall be provided to the user by the manufacturer or its distributors and shall be available for inspection at the job site at the request of the Building Official.

This NOA **revises and replaces NOA # 03-0604.01** and consists of this page 1 and evidence pages E-1 and E-2, as well as approval document mentioned above.

The submitted documentation was reviewed by **Manuel Perez, P.E.**

PRODUCT CONTROL ACCEPTED

Vistawall Architectural Products

NOTICE OF ACCEPTANCE: EVIDENCE SUBMITTED

A. DRAWINGS

1. Manufacturer's die drawings and sections.
2. Drawing No. **FG-5000_02**, titled "FG-5000 Window Wall System Protocols: PA 201/202/203", sheets 1 through 10 of 10, dated 9/11/03, sheets 4 & 6 with revision A dated 1/3/04, prepared by the manufacturer, signed and sealed by Lewis A. Waldrop, P.E.

B. TESTS

1. Test reports on 1) Air Infiltration Test, per FBC, PA 202-94
   2) Uniform Static Air Pressure Test, Loading per FBC PA 202-94
   3) Water Resistance Test, per FBC, PA 202-94
   4) Large Missile Impact Test per FBC, PA 201-94
   5) Cyclic Wind Pressure Loading per FBC, PA 203-94

   along with marked-up drawings and installation diagram of 8 specimens of FG-5000 window wall system, prepared by Hurricane Test Laboratory, Inc., Test Report No. **HTL-0105-0612-02**, dated 06/10/02 to 07/15/02, signed and sealed by Vinu J. Abraham, P.E.
2. Test reports on 1) Uniform Static Air Pressure Test, Loading per PA 202-94
   2) Large Missile Impact Test, SFBC PA 201- 94
   3) Cyclic Loading Test, per SFBC PA 203-94

   along with installation diagram of a FG-5000 window wall system using 9/16" laminated glass with "Stormglass" laminate by Oldcastle Glass, prepared by Hurricane Test Laboratory, Test Report No.**HTL-0105-0920-03**, dated 9/17/03, signed and sealed by Vinu J. Abraham, P.E.

(Next test reports submitted under NOA#01-0516.12 and are for reference only)

3. Test reports on 1) Large Missile Impact Test, SFBC PA 201-94
   2) Cyclic Loading Test, per SFBC PA 203-94
   3) Uniform Static Air Pressure Test, Loading per PA 202-94

   along with installation diagram of a window wall system prepared by Hurricane Test Laboratory, Test Report No.**HTL-0105-0309-01**, dated 3/6/01, signed and sealed by Vinu J. Abraham, P.E.
4. Test reports on 1) Large Missile Impact Test, SFBC PA 201-94
   2) Cyclic Loading Test, per SFBC PA 203-94

   along with installation diagram of a window wall system prepared by Hurricane Test Laboratory, Test Report No.**HTL-0105-1212-00**, dated 12/18/00, signed and sealed by Vinu J. Abraham, P.E.

Manuel Perez, P.E.
Product Control Examiner
NOA No 04-0209.01
Expiration Date: January 08, 2009
Approval Date: March 04, 2004

NOTICE OF ACCEPTANCE: EVIDENCE SUBMITTED

5. Test reports on 1) Air Infiltration Test, per PA 202-94
2) Uniform Static Air Pressure Test, Loading per PA 202-94
3) Water Resistance Test, per PA 202-94
4) Forced Entry Test, per SFBC 3603.2(b) and PA 202-94.
5) Large Missile Impact Test, SFBC PA 201-94
6) Cyclic Loading Test, per SFBC PA 203-94
along with installation diagram of a window wall system prepared by Hurricane Test Laboratory, Test Report No.**HTL-0105-1212-00**, dated 12/21/00, signed and sealed by Vinu J. Abraham, P.E.

C. CALCULATIONS

1. Anchor calculations and structural analysis, prepared by Lewis A. Waldrop, P.E. Consulting Engineer, dated 4/23/03 and revised on 11/7/03, signed and sealed by Lewis A. Waldrop, P.E. Complies with ASTM E1300-98.

D. QUALITY ASSURANCE

1. Miami Dade County Building Code Compliance Office.

E. STATEMENTS

1. Statement letter of conformance, dated May 27, 2003, signed and sealed by Lewis A. Waldrop, P.E.

2. Statement letter of no financial interest, dated May 29, 2003, signed by Lewis A. Waldrop, P.E.

3. Laboratory compliance letter for Test Report No. **HTL- 0105-0612-02**, issued by Hurricane Test Laboratory, Inc., dated January 27, 2003, signed and sealed by Vinu J. Abraham, P.E.

F. MATERIAL CERTIFICATIONS

1. Notice of Acceptance No. **01-1204.01** issued to E.I. DuPont DeNemours for their "Sentry Glass ® Plus" dated 01/17/02, expiring on 01/14/07.

2. Notice of Acceptance No. **02-1205.03** issued to Security Impact Glass Holdings L.L.C. for their "SAF-GLAS" dated 01/02/03, expiring on 12/16/07.

3. Notice of Acceptance No. **01-0205.02** issued to Solutia Inc. for their "Saflex /Keepsafe Maximum" dated 05/17/01, expiring on 05/21/06.

4. Notice of Acceptance No. **00-0614.09** issued to Viracon Inc. for their "HRG-2 Laminated Glass" dated 11/02/2000, expiring on 10/16/03.

5. Notice of Acceptance No. **03-0514.15** issued to Oldcastle Glass for their "Stormglass Laminated Glass" dated, expiring on .

G. OTHER

1. Notice of Acceptance No. **03-0604.01** Vistawall Architectural Products, Series "FG5000 Storefront", approved on 01/08/04 and expiring on 01/08/09.

Manuel Perez, P.E.
Product Control Examiner
NOA No 04-0209.01
Expiration Date: January 08, 2009
Approval Date: March 04, 2004

PRODUCT APPROVAL DRAWINGS
FG-5000 FRAMING SYSTEM WITH MULITPLE INFILLS FOR USE IN HURRICANE ZONES REQUIRING LARGE MISSILE IMPACT PROTECTION

INDEX TO DRAWINGS

SHEET 1: INDEX TO DRAWINGS AND NOTES
SHEET 2: TYPICAL ELEVATION HEAVY ALUM. MULLION -SHORT SPAN-
SHEET 3: TYPICAL ELEVATION HEAVY ALUM. MULLION -LONG SPAN-
SHEET 4: TYPICAL ELEVATION LIGHT ALUM. MULLION WITH STL REINFORCING-LONG SPAN-
SHEET 5: TYPICAL ELEVATION LIGHT ALUM. MULLION WITHOUT STEEL-SHORT SPAN-
SHEET 6: GLAZING SCHEDULE
SHEET 7-9: FRAMING DETAILS
SHEET 10: COMMON BILL OF MATERIALS

Lewis A. Waldrop, P.E.
P. O. Box 620
Alto, GA 30510
706-778-3784

Lewis A. Waldrop, P.E.
FLA. P.E. #21959

1/15/04

Approved as complying with the Florida Building Code
Date MARCH 4, 2004
NOA# 04-0209.01
Miami Dade Product Control Division
By

DRAWINGS FOR DADE COUNTY PRODUCT APPROVAL

REV	BY	DATE	DESCRIPTION

MANUAL COMP

VISTAWALL ARCHITECTURAL PRODUCTS
214 WALT SANDERS MEMORIAL BLVD. NEWNAN, GA. 30265 (770) 252-3090
THE VISTAWALL GROUP
BUTLER MANUFACTURING COMPANY

PROJECT: PRODUCT APPROVAL DRAWINGS FG-5000 WINDOW WALL SYSTEM PROTOCOLS: PA 201/202/203 GENERAL NOTES AND INFORMATION

PROJECT NO.

DRAWN	DATE
WRD	9/11/03

SCALE: FULL

DRAWING NO. FG-5000_02

SHEET 1 OF 10

PERIMETER FASTENERS

LOCATE AS SHOWN:
3/8"ø x 2 1/2" LONG
LAGBOLTS TYP. @ WOOD
2" MIN. EMBEDMENT
1 1/2" MIN. SPACING
BETWEEN FASTENERS

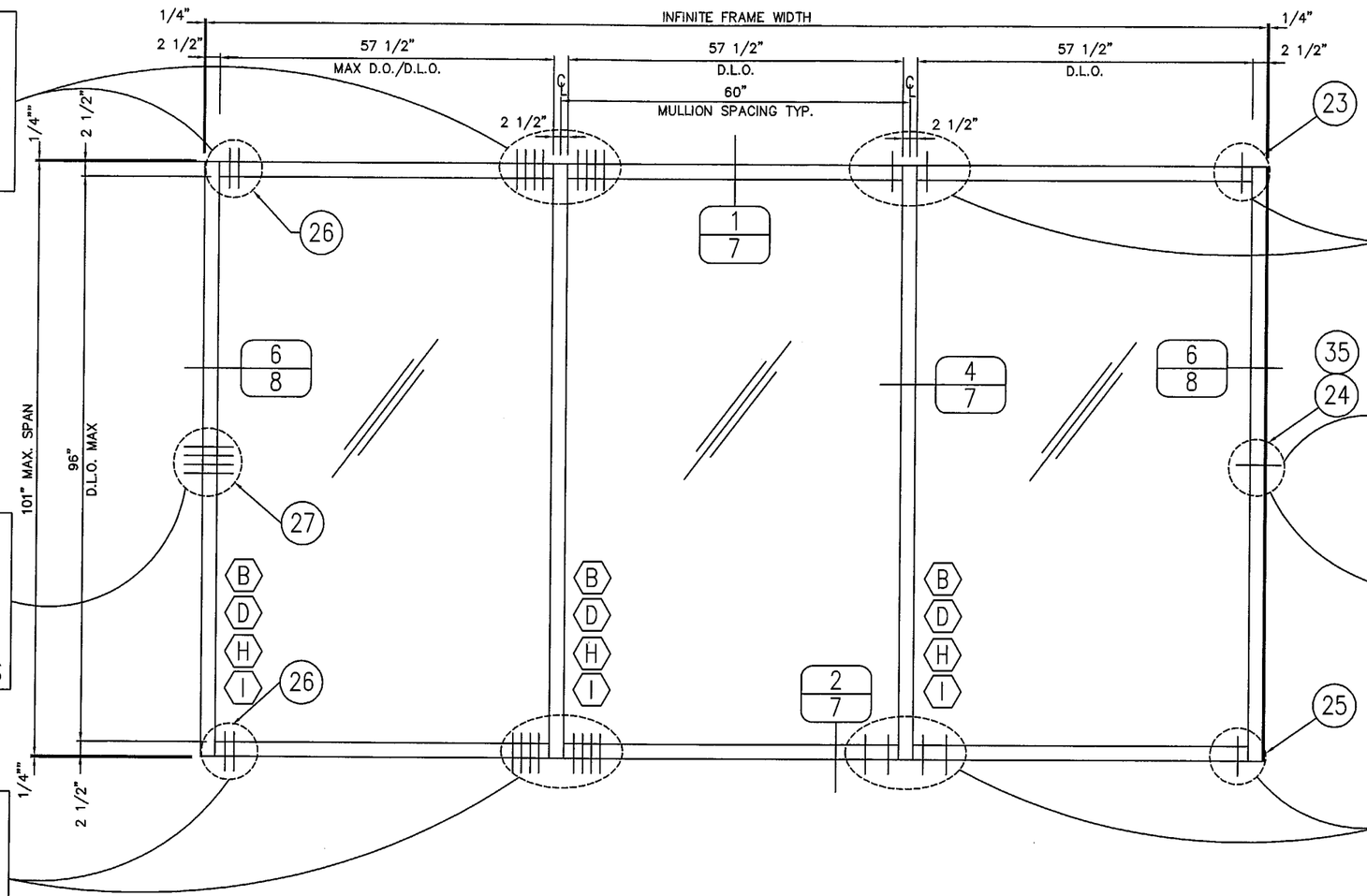

NOTE:
FIRST ANCHOR IS 2" FROM EDGE OF VERTICAL. EACH ADDITIONAL FASTENER IS AT REQUIRED MIN. SPACING

PERIMETER FASTENERS

LOCATE AS SHOWN:
3/8"x1 1/2" GRADE 5 BOLT
WITH NUT & WASHER TYPICAL
@ STEEL 1 1/2" MIN. SPACING
BETWEEN FASTENERS

LOCATE (1) EA. 3" ABOVE & BELOW
MID-POINT 3/8"ø x 2 1/2" LONG
LARGE DIAMETER TAPCON TYPICAL
@ CONCRETE, 2" MIN. EMBEDMENT
4 1/2" MIN. SPACING BETWEEN
FASTENERS

LOCATE (2) EA. ABOVE
AND BELOW MIDPOINT
3/8"ø X 3" LONG LAGBOLTS
TYP. @ WOOD. 2" MIN.
EMBEDMENT, 1 1/2" MIN.
SPACING BETWEEN FASTENERS

LOCATE @ MIDPOINT:
3/8"x2" GRADE 5 BOLT
WITH NUT & WASHER TYPICAL
@ STEEL 1 1/2" MIN. SPACING
BETWEEN FASTENERS

LOCATE AS SHOWN:
3/8"ø x 2 1/2" LONG
LARGE DIAMETER TAPCON
TYPICAL @ CONCRETE
2" MIN. EMBEDMENT
4 1/2" MIN. SPACING
BETWEEN FASTENERS

LOCATE AS SHOWN:
3/8"ø x 2 1/2" LONG
LAGBOLTS TYP. @ WOOD
2" MIN. EMBEDMENT
1 1/2" MIN. SPACING
BETWEEN FASTENERS

TYPICAL ELEVATION HEAVY ALUM. MULLION -SHORT SPAN-

NOTE 1: ALTERNATE JAMB 8/9 8A/9 ARE OPTIONAL AT ANY WALL JAMB WITHOUT BEING ATTACHED TO SUBSTRATE.

NOTE 2: HORIZONTAL MULLION (DETAIL 3/7) IS OPTIONAL AT ANY LOCATION IN ANY BAY.

D.L.O. = DAYLITE OPENING

TYPICAL INSTALLATION INTO:
WOOD/STEEL/CONCRETE FRAME
2500 P.S.I. CONCRETE @ SILL

DESIGN PRESSURE = +/- 70 PSF

WATER TEST AT 15 PSF
AIR TEST AT 6.24 PSF

Lewis A. Waldrop, P.E.
P. O. Box 620
Alto, GA 30510
706-776-3784

Lewis A. Waldrop, P.E.
FLA. P.E. #21959

1/16/04

Approved as complying with the Florida Building Code
Date MARCH 4 2004
NOA# 04-0209.01
Miami Dade Product Control Division
By

DRAWINGS FOR
DADE COUNTY
PRODUCT APPROVAL

REV	BY	DATE	DESCRIPTION

MANUAL COMP

VISTAWALL ARCHITECTURAL PRODUCTS
803 AIRPORT RD. TERRELL TX 75160 (972) 551-6100
THE VISTAWALL GROUP
BUTLER MANUFACTURING COMPANY

PRODUCT APPROVAL DRAWINGS
FG-5000 WINDOW WALL SYSTEMS
PROTOCOLS: PA 201/202/203
FRAMING
ELEVATIONS

PROJECT

PROJECT NO.

DRAWN WRD | DATE 9/11/03

SCALE 1"=1'-0"

DRAWING NO. FG-5000_02

SHEET 2 OF 10

NOTE:
FIRST ANCHOR IS 2" FROM EDGE OF VERTICAL. EACH ADDITIONAL FASTENER IS AT REQUIRED MIN. SPACING

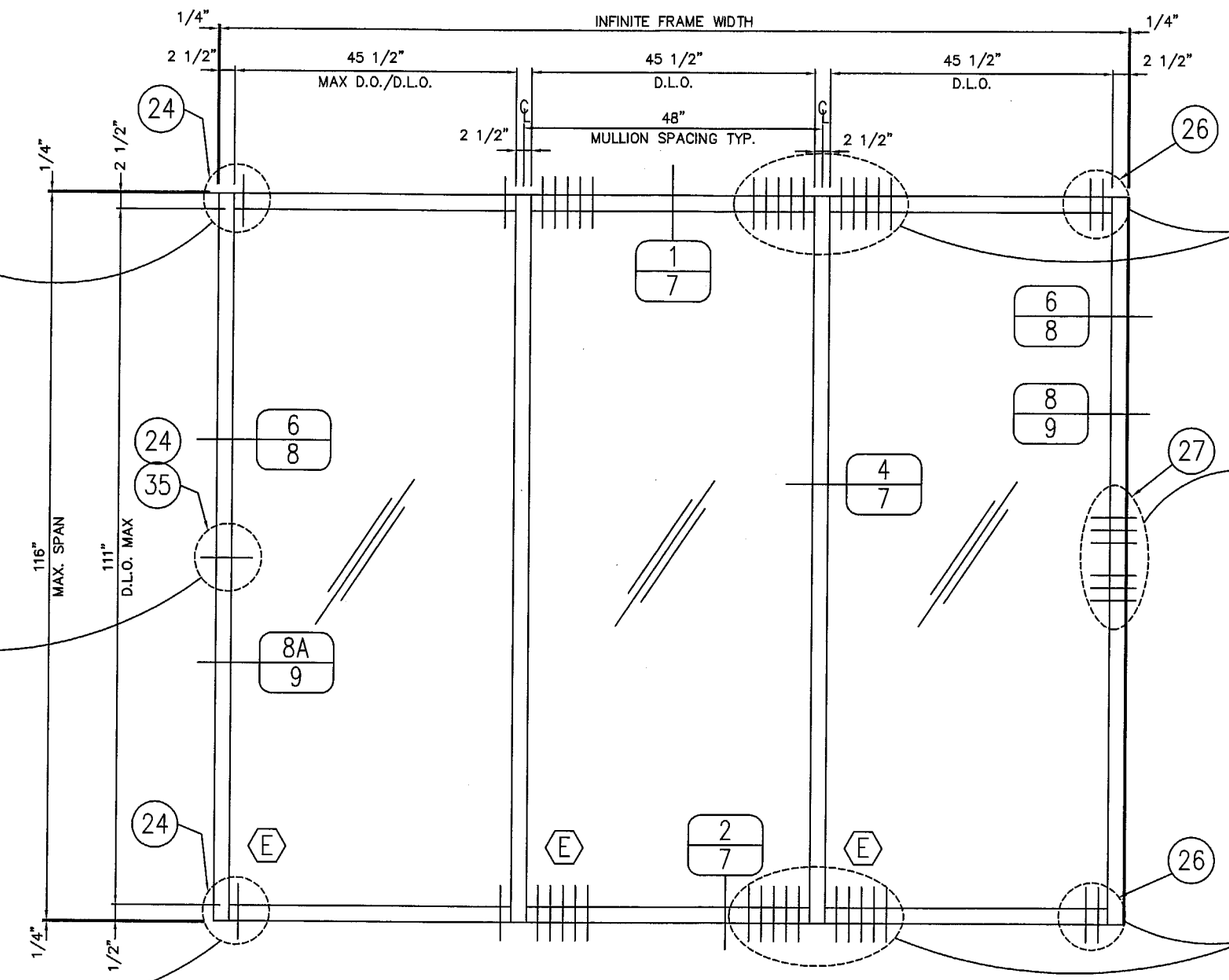

PERIMETER FASTENERS

LOCATE AS SHOWN:
3/8"x1 1/2" GRADE 5 BOLT WITH NUT & WASHER TYPICAL @ STEEL 1 1/2" MIN. SPACING BETWEEN FASTENERS

LOCATE (1) EA. 3" ABOVE & BELOW MID-POINT 3/8"ø x2 1/2" LONG LARGE DIAMETER TAPCON TYPICAL @ CONCRETE, 2" MIN. EMBEDMENT 4 1/2" MIN. SPACING BETWEEN FASTENERS

LOCATE @ MIDPOINT:
3/8"x2" GRADE 5 BOLT WITH NUT & WASHER TYPICAL @ STEEL 1 1/2" MIN. SPACING BETWEEN FASTENERS

LOCATE AS SHOWN:
3/8"ø x2 1/2" LONG LARGE DIAMETER TAPCON TYPICAL @ CONCRETE 2" MIN. EMBEDMENT 4 1/2" MIN. SPACING BETWEEN FASTENERS

PERIMETER FASTENERS

LOCATE AS SHOWN:
3/8"ø x2 1/2" LONG LAGBOLTS TYPICAL @ WOOD – 2" MIN. EMBEDMENT, 1 1/2" MIN. SPACING BETWEEN FASTENERS

LOCATE (3) EA. ABOVE & BELOW:
3/8"ø x3" LONG LAGBOLTS TYPICAL @ WOOD – 2" MIN. EMBEDMENT, 1 1/2" MIN. SPACING BETWEEN FASTENERS

LOCATE AS SHOWN:
3/8"ø x2 1/2" LONG LAGBOLTS TYPICAL @ WOOD – 2" MIN. EMBEDMENT, 1 1/2" MIN. SPACING BETWEEN FASTENERS

TYPICAL ELEVATION HEAVY ALUM. MULLION
-LONG SPAN-

NOTE 1: ALTERNATE JAMB [8/9] [8A/9] ARE OPTIONAL AT ANY WALL JAMB WITHOUT BEING ATTACHED TO SUBSTRATE.

NOTE 2: HORIZONTAL MULLION (DETAIL 3/7) IS OPTIONAL AT ANY LOCATION IN ANY BAY.

TYPICAL INSTALLATION INTO:
WOOD/STEEL/CONCRETE FRAME

DESIGN PRESSURE = +40 PSF/–50 PSF

D.L.O. = DAYLITE OPENING
PA202 (ST), 201, 203

Lewis A. Waldrop, P.E.
P. O. Box 620
Alto, GA 30510
706-778-3784

Lewis A. Waldrop, P.E.
FLA. P.E. #21959

1/15/04

Approved as complying with the Florida Building Code
Date MARCH 4, 2004
NOA# 04-0209.01
Miami Dade Product Control Division
By Manuel Perez

DRAWINGS FOR DADE COUNTY PRODUCT APPROVAL

REV	BY	DATE	DESCRIPTION

MANUAL COMP

VISTAWALL ARCHITECTURAL PRODUCTS
803 AIRPORT RD. TERRELL TX 75160 (972) 551-6100
THE VISTAWALL GROUP
BUTLER MANUFACTURING COMPANY

PRODUCT APPROVAL DRAWINGS
FG-5000 WINDOW WALL SYSTEM
PROTOCOLS: PA 201/202/203
FRAMING ELEVATIONS

PROJECT

PROJECT NO.

DRAWN WRD | DATE 9/11/03

SCALE 1"=1'–0"

DRAWING NO. FG–5000_02

SHEET 3 OF 10

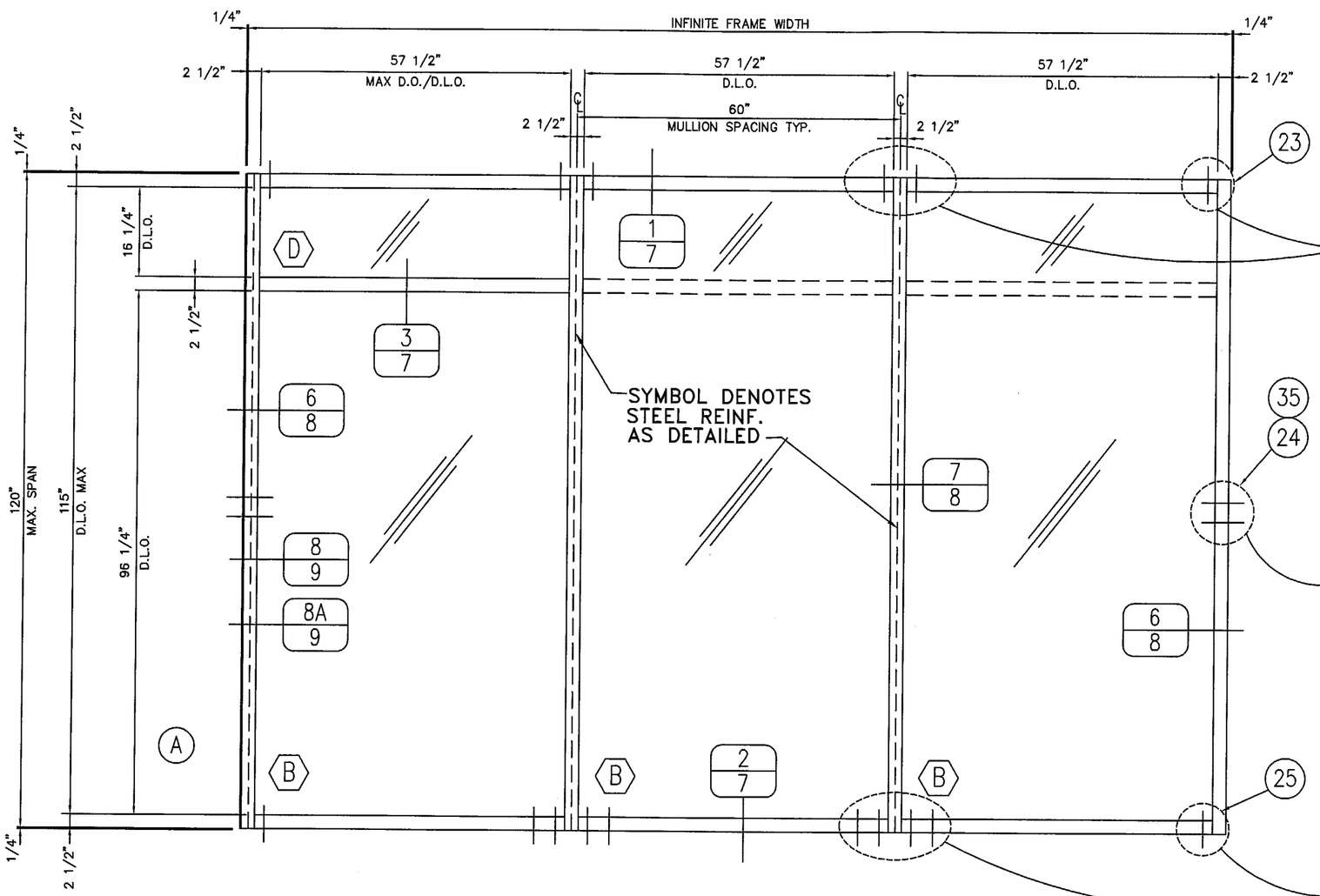

NOTE:
FIRST ANCHOR IS 2" FROM EDGE OF VERTICAL. EACH ADDITIONAL FASTENER IS AT REQUIRED MIN. SPACING

PERIMETER FASTENERS

LOCATE AS SHOWN:
3/8"x1 1/2" GRADE 5 BOLT WITH NUT & WASHER TYPICAL @ STEEL 1 1/2" MIN. SPACING BETWEEN FASTENERS

LOCATE (1) EA. 3" ABOVE & BELOW MID-POINT 3/8"ø x2 1/2" LONG LARGE DIAMETER TAPCON TYPICAL @ CONCRETE, 2" MIN. EMBEDMENT 4 1/2" MIN. SPACING BETWEEN FASTENERS

LOCATE (1) EA. 1 1/2" ABOVE & BELOW MIDPOINT:
3/8"x2" GRADE 5 BOLT WITH NUT & WASHER TYPICAL @ STEEL 1 1/2" MIN. SPACING BETWEEN FASTENERS

LOCATE AS SHOWN:
3/8"ø x2 1/2" LONG LARGE DIAMETER TAPCON TYPICAL @ CONCRETE 2" MIN. EMBEDMENT 4 1/2" MIN. SPACING BETWEEN FASTENERS

TYPICAL ELEVATION LIGHT ALUM. MULLION -LONG SPAN- WITH STEEL REINFORCEMENT

NOTE 1: ALTERNATE JAMB 8/9 8A/9 ARE OPTIONAL AT ANY WALL JAMB WITHOUT BEING ATTACHED TO SUBSTRATE.

NOTE 2: HORIZONTAL MULLION (DETAIL 3/7) IS OPTIONAL AT ANY LOCATION IN ANY BAY.
D.L.O. = DAYLITE OPENING

DESIGN PRESSURE = +/- 90 PSF

TYPICAL INSTALLATION INTO:
STEEL/CONCRETE FRAME
2500 P.S.I. CONCRETE @ SILL

Lewis A. Waldrop, P.E.
P. O. Box 620
Alto, GA 30510
706-778-3784

Lewis A. Waldrop, P.E.
FLA. P.E. #21959

1/15/04

Approved as complying with the Florida Building Code
Date MARCH 4, 2004
NOA# 04-0205.01
Miami Dade Product Control Division
By

DRAWINGS FOR DADE COUNTY PRODUCT APPROVAL

REV	BY	DATE	DESCRIPTION
A	PC	1/3/04	REMOVE GLASS MARKS D,H, & I

MANUAL COMP

VISTAWALL ARCHITECTURAL PRODUCTS
803 AIRPORT RD. TERRELL TX 75160 (972) 551-6100
THE VISTAWALL GROUP
BUTLER MANUFACTURING COMPANY

PRODUCT APPROVAL DRAWINGS
FG-5000 WINDOW WALL SYSTEM
PROTOCOLS: PA 201/202/203

FRAMING ELEVATIONS

PROJECT

PROJECT NO.

DRAWN WRD | DATE 9/11/03

SCALE 1"=1'-0"

DRAWING NO. FG-5000_02

SHEET 4 OF 10

PERIMETER FASTENERS

LOCATE AS SHOWN:
3/8"x1 1/2" GRADE 5 BOLT
WITH NUT & WASHER TYPICAL
@ STEEL 1 1/2" MIN. SPACING
BETWEEN FASTENERS

LOCATE @ MIDPOINT:
3/8"x2" GRADE 5 BOLT
WITH NUT & WASHER TYPICAL
@ STEEL 1 1/2" MIN.
SPACING BETWEEN FASTENERS

LOCATE (1) EA. 3" ABOVE & BELOW
MID-POINT 3/8"øx2 1/2" LONG
LARGE DIAMETER TAPCON TYPICAL
@ CONCRETE, 2" MIN. EMBEDMENT
4 1/2" MIN. SPACING BETWEEN
FASTENERS

LOCATE AS SHOWN:
3/8"øx2 1/2" LONG
LARGE DIAMETER TAPCON
TYPICAL @ CONCRETE
2" MIN. EMBEDMENT
4 1/2" MIN. SPACING
BETWEEN FASTENERS

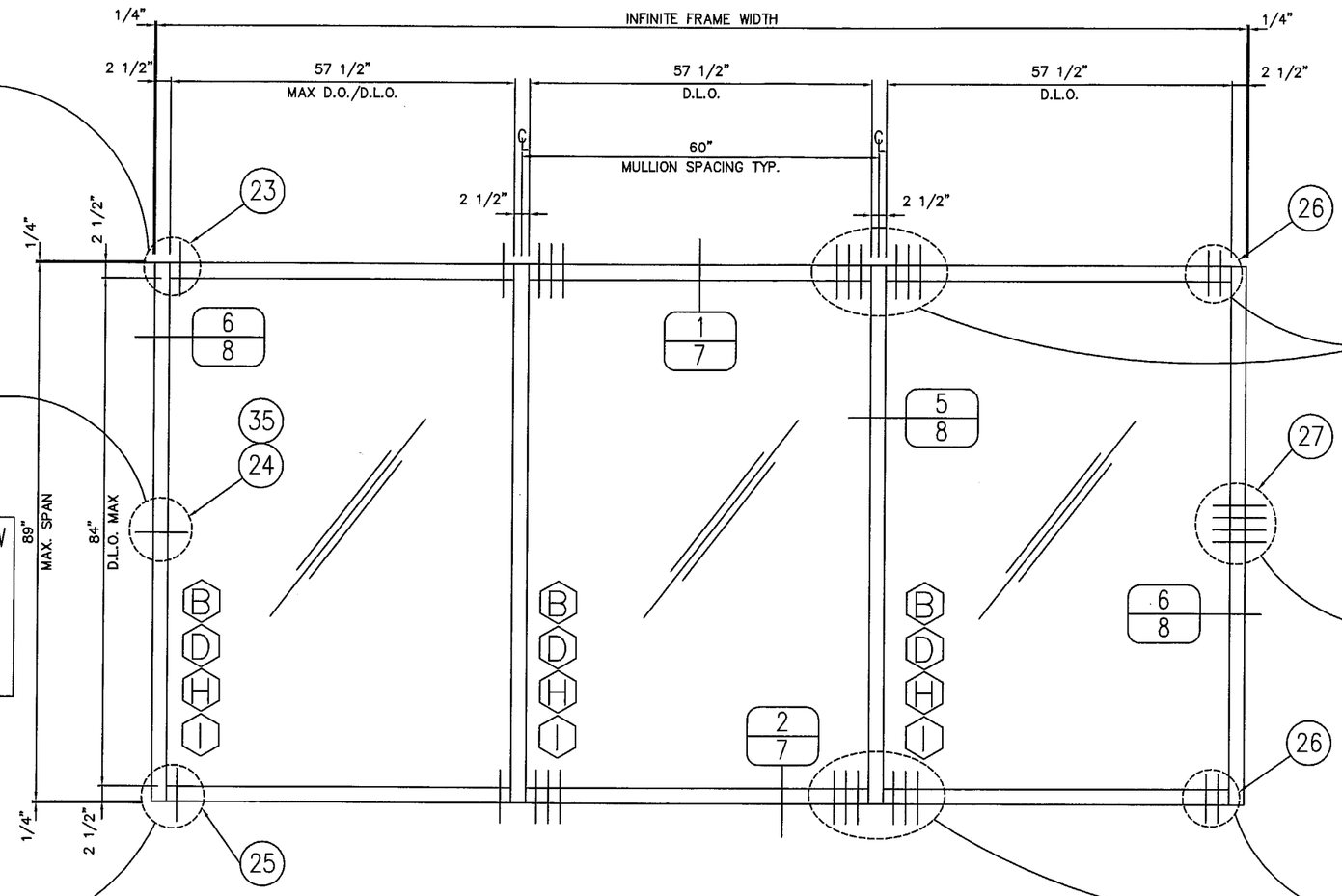

NOTE:
FIRST ANCHOR IS 2" FROM
EDGE OF VERTICAL. EACH
ADDITIONAL FASTENER IS
AT REQUIRED MIN. SPACING

PERIMETER FASTENERS

LOCATE AS SHOWN:
3/8"øx2 1/2" LONG LAGBOLTS
TYPICAL @ WOOD – 2" MIN.
EMBEDMENT, 1 1/2" MIN.
SPACING BETWEEN FASTENERS

LOCATE (2) EA. ABOVE
& BELOW MIDPOINT:
3/8"øx3" LONG LAGBOLTS
TYPICAL @ WOOD – 2" MIN.
EMBEDMENT, 1 1/2" MIN.
SPACING BETWEEN FASTENERS

LOCATE AS SHOWN:
3/8"øx2 1/2" LONG LAGBOLTS
TYPICAL @ WOOD – 2" MIN.
EMBEDMENT, 1 1/2" MIN.
SPACING BETWEEN ANCHORS

TYPICAL ELEVATION LIGHT ALUM. MULLION -SHORT SPAN WITHOUT STEEL-

NOTE 1: ALTERNATE JAMB 8/9 8A/9 IS OPTIONAL AT ANY WALL JAMB WITHOUT BEING ATTACHED TO SUBSTRATE.

NOTE 2: HORIZONTAL MULLION (DETAIL 3/7) IS OPTIONAL AT ANY LOCATION IN ANY BAY.

TYPICAL INSTALLATION INTO:
WOOD/STEEL/CONCRETE FRAME

DESIGN PRESSURE = +/– 70 PSF

D.L.O. = DAYLITE OPENING

PA202 (ST), 201, 203

Lewis A. Waldrop, P.E.
P. O. Box 620
Alto, GA 30510
706-776-3784

Lewis A. Waldrop, P.E.
FLA. P.E. #21959

1/15/04

Approved as complying with the
Florida Building Code
Date MARCH 4, 2004
NOA# 04-0209.01
Miami Dade Product Control
Division
By Manuel Serra

DRAWINGS FOR
DADE COUNTY
PRODUCT APPROVAL

REV	BY	DATE	DESCRIPTION

MANUAL COMP

VISTAWALL ARCHITECTURAL PRODUCTS
803 AIRPORT RD. TERRELL TX 75160 (972) 551-6100
THE VISTAWALL GROUP
BUTLER MANUFACTURING COMPANY

PRODUCT APPROVAL DRAWINGS
FG-5000 WINDOW WALL SYSTEM
PROTOCOLS: PA 201/202/203

FRAMING ELEVATIONS

PROJECT

PROJECT NO.

DRAWN WRD | DATE 9/11/03

SCALE 1"=1'-0"

DRAWING NO. FG-5000_02

SHEET 5 OF 10

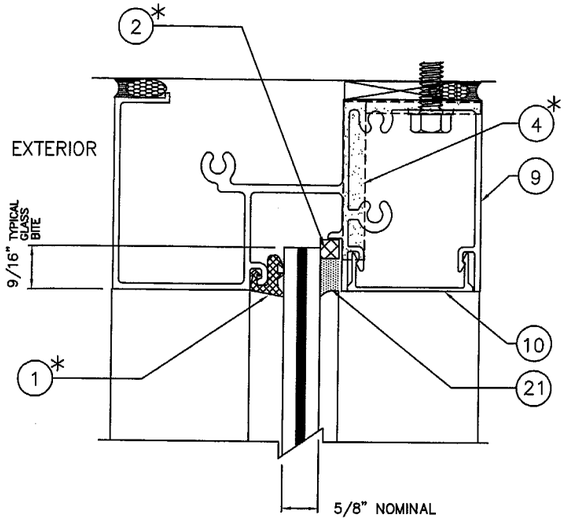

B

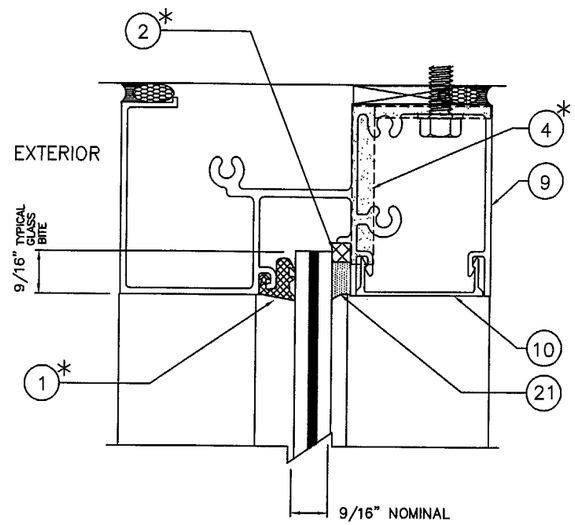

D
E
H
I

TYPICAL GLASS SIZE= DLO +1 1/8"

1* TYPICAL EXTERIOR GASKET

2* TYPICAL INTERIOR SPACER GASKET

4* TYP. @ ALL JOINT INTERSECTIONS

21* TYPICAL INTERIOR/ SEALANT

GLAZING SCHEDULE

GLASS MARK SYMBOL	GLASS TYPE	MANUFACTURER	MAXIMUM D.L.O. SIZE	MAXIMUM SQUARE FEET
B	5/8" OVERALL THICKNESS LAMINATED GLASS "HRG-2", CONSISTING OF TWO 1/4" HS GLASS AND A 0.080 POLYCARBONATE INTERLAYER BETWEEN TWO 0.050 URETHANE INTERLAYER	VIRACON	57 1/2" X 115"	49.9
D	9/16" OVERALL THICKNESS LAMINATED GLASS "SAF-GLAS" 0.070 POLYCARBONATE INTERLAYER BETWEEN TWO 0.015" ADHESIVE LAYERS BY SIG	SECURITY IMPACT GLASS	57 1/2" X 96"	38.3
E	9/16" OVERALL THICKNESS LAMINATED GLASS "SAFLEX" PLUS 100 CONSISTING OF TWO 1/4" HS GLASS, AND A 0.090" SOLUTIA SAFLEX PVB INTERLAYER	SOLUTIA	45 1/2" X 111"	35.1
H	9/16" OVERALL THICKNESS LAMINATED GLASS "SENTRY GLAS PLUS 100", CONSISTING OF TWO 1/4" HS GLASS AND A 0.100" DUPONT SENTRYGLAS PLUS100 PVB INTERLAYER	DUPONT	57 1/2" X 96"	38.3
I	9/16" OVERALL THICKNESS LAMINATED GLASS STORMGLASS CONSISTING OF TWO 1/4" H.S GLASS AND A 0.075" OLDCASTLE INTERLAYER	OLDCASTLE	57 1/2" X 96"	38.3

OPTIONS AND LIMITATIONS

DESIGN PRESSURE P.S.F.	INTERM VERTICAL MULLION	WALL JAMB MULLION	MAX. MULLION LENGTH	MAX. SPAN CL TO CL	QUALIFIED GLASS TYPE
+40/-50	FG-5155 W/O STEEL	FG-5161 W/O STEEL	116"	48"	E
+70/-70	FG-5121 W/O STEEL	FG-5161 W/O STEEL	89"	60"	B D H OR I (A)
+70/-70	FG-5155 W/O STEEL	FG-5161 W/O STEEL	101"	60"	B D H OR I
+90/-90	FG-5121 WITH STEEL	FG-5161 W/O STEEL	120"	60"	B

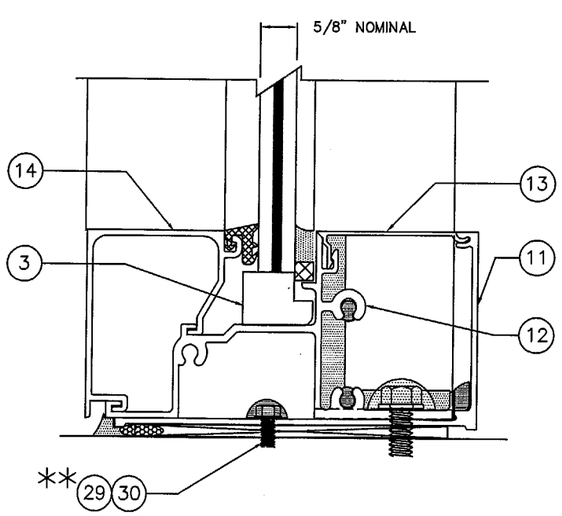

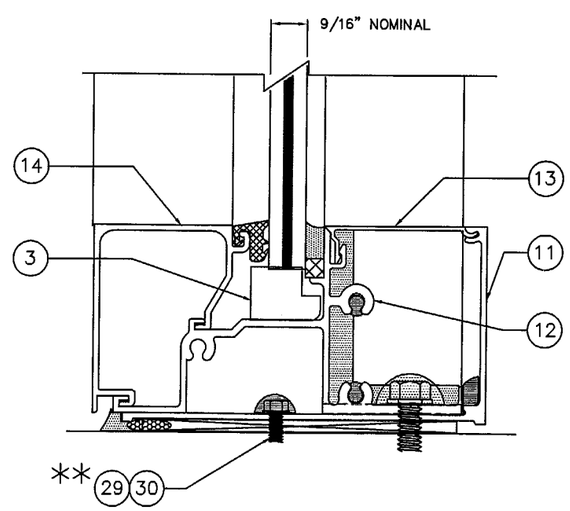

** NON-STRUCTURAL FASTENER -TYPICAL-

Lewis A. Waldrop, P.E.
P. O. Box 620
Alto, GA 30510
706-776-3784

Lewis A. Waldrop, P.E.
FLA. P.E. #21959

1/13/04

Approved as complying with the Florida Buiding Code
Date MARCH 4 2004
NOA# 04-0209.01
Miami Dade Product Control Division
By Manuel Perez

DRAWINGS FOR DADE COUNTY PRODUCT APPROVAL

REV	BY	DATE	DESCRIPTION
A	PC	1/3/04	REV CHART TO MATCH ELEV.

MANUAL COMP

VISTAWALL ARCHITECTURAL PRODUCTS
803 AIRPORT RD. TERRELL TX 75160 (972) 551-6100
THE VISTAWALL GROUP
BUTLER MANUFACTURING COMPANY

PROJECT
PRODUCT APPROVAL DRAWINGS
FG-5000 WINDOW WALL SYSTEM
PROTOCOLS: PA 201/202/203

GLAZING OPTIONS

PROJECT NO.

DRAWN WRD | DATE 9/11/03

SCALE FULL

DRAWING NO. FG-5000_02

SHEET 6 OF 10

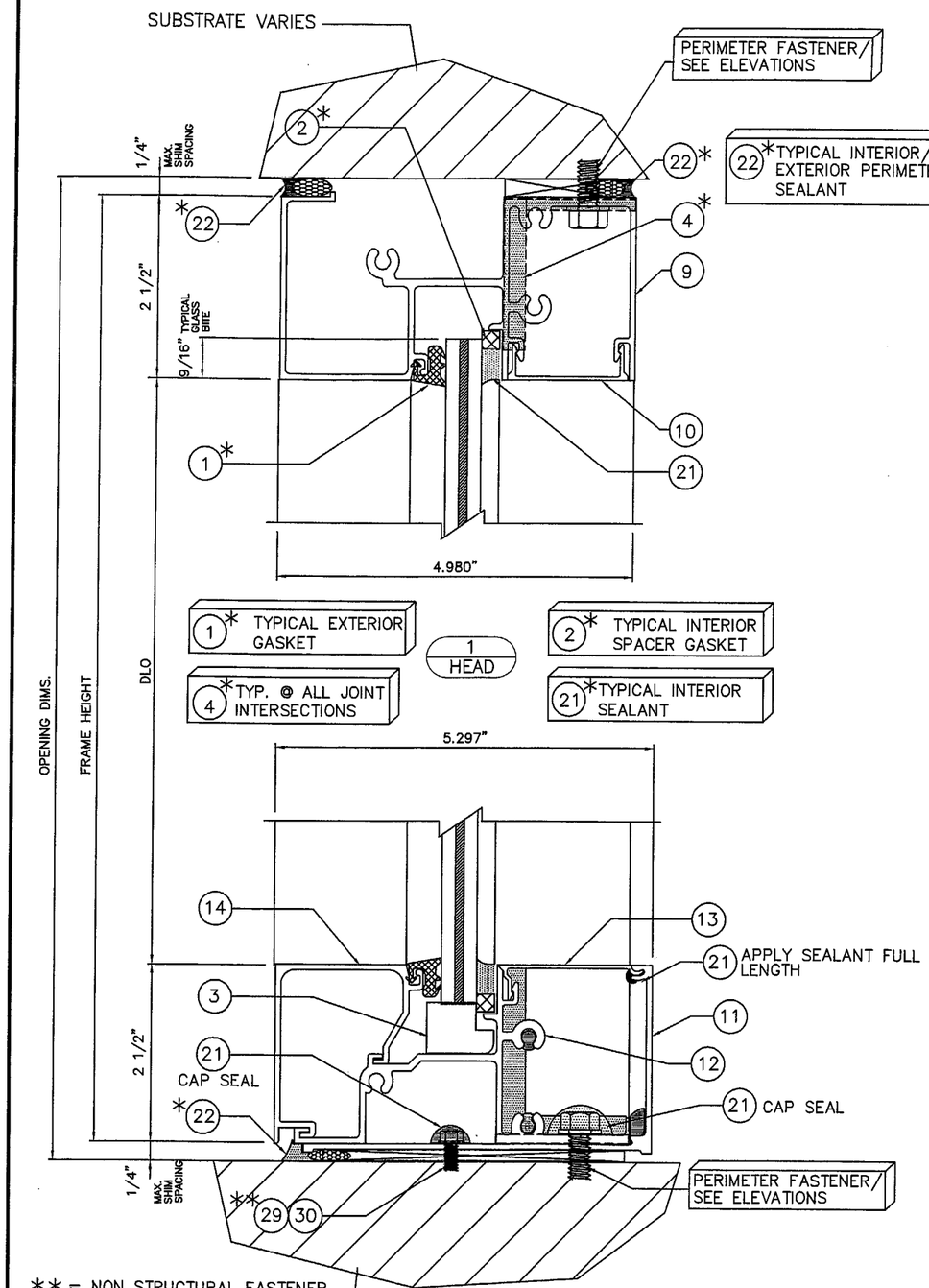

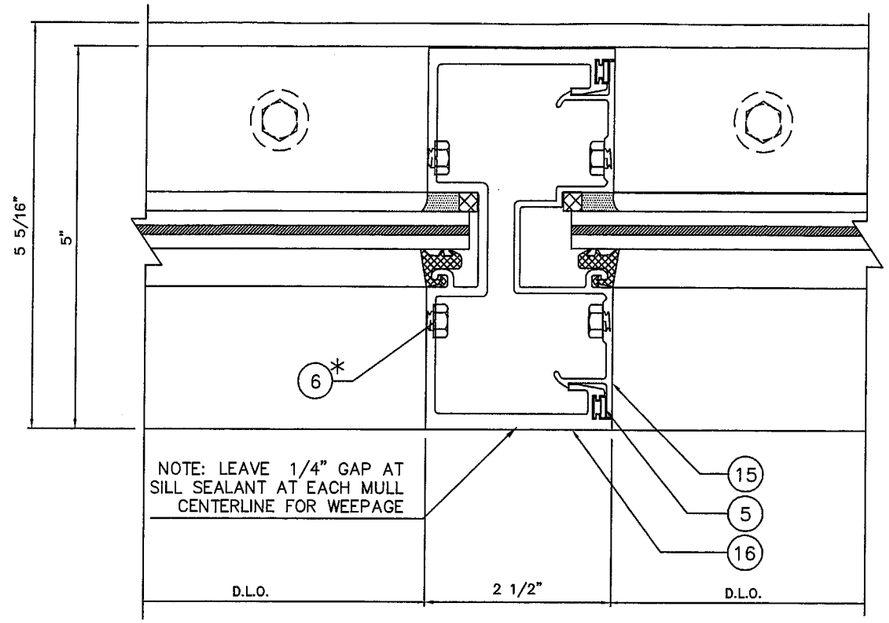

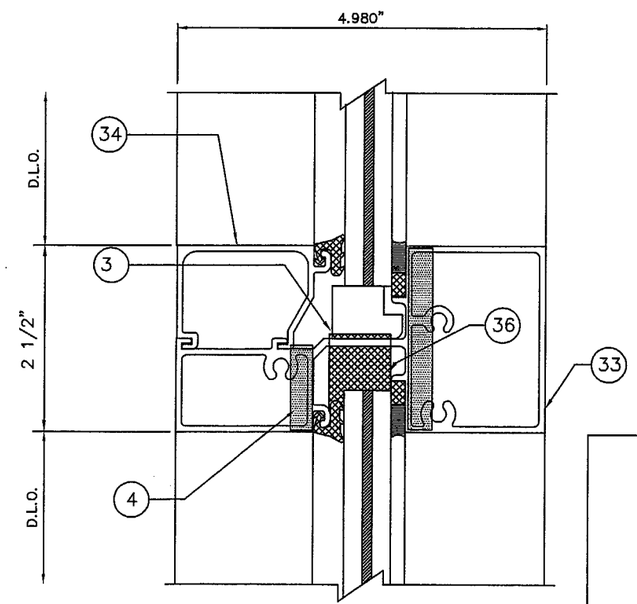

Lewis A. Waldrop, P.E.
P. O. Box 620
Alto, GA 30510
706-778-3784

Lewis A. Waldrop, P.E.
FLA. P.E. #21959

1/18/04

Approved as complying with the Florida Buiding Code
Date MARCH 4, 2004
NOA# 04-0209.01
Miami Dade Product Control Division
By

DRAWINGS FOR DADE COUNTY PRODUCT APPROVAL

REV	BY	DATE	DESCRIPTION

MANUAL COMP

VISTAWALL ARCHITECTURAL PRODUCTS
803 AIRPORT RD. TERRELL TX 75160 (972) 551-6100
THE VISTAWALL GROUP
BUTLER MANUFACTURING COMPANY

PRODUCT APPROVAL DRAWINGS
FG-5000 WINDOW WALL SYSTEM
PROTOCOLS: PA 201/202/203

FRAMING DETAILS

PROJECT

PROJECT NO.

DRAWN WRD | DATE 9/11/03

SCALE FULL

DRAWING NO. FG--5000_02

SHEET 7 OF 10

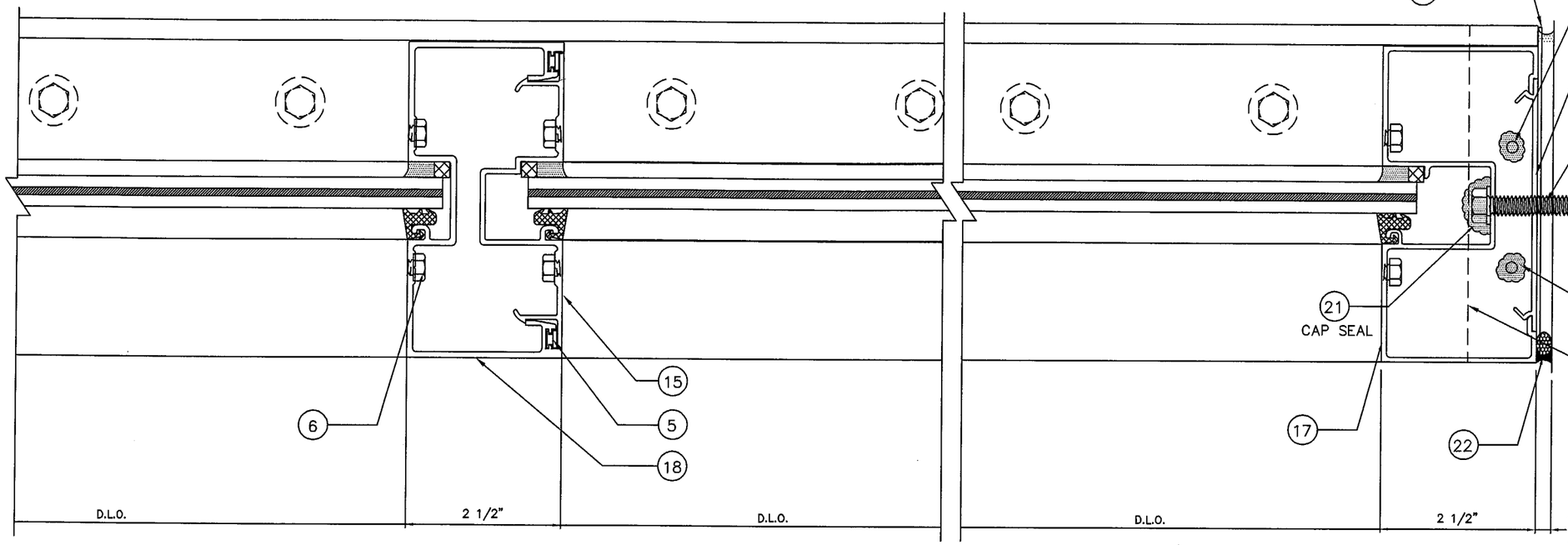

5
LIGHT INTERM. VERTICAL

6
WALL JAMB

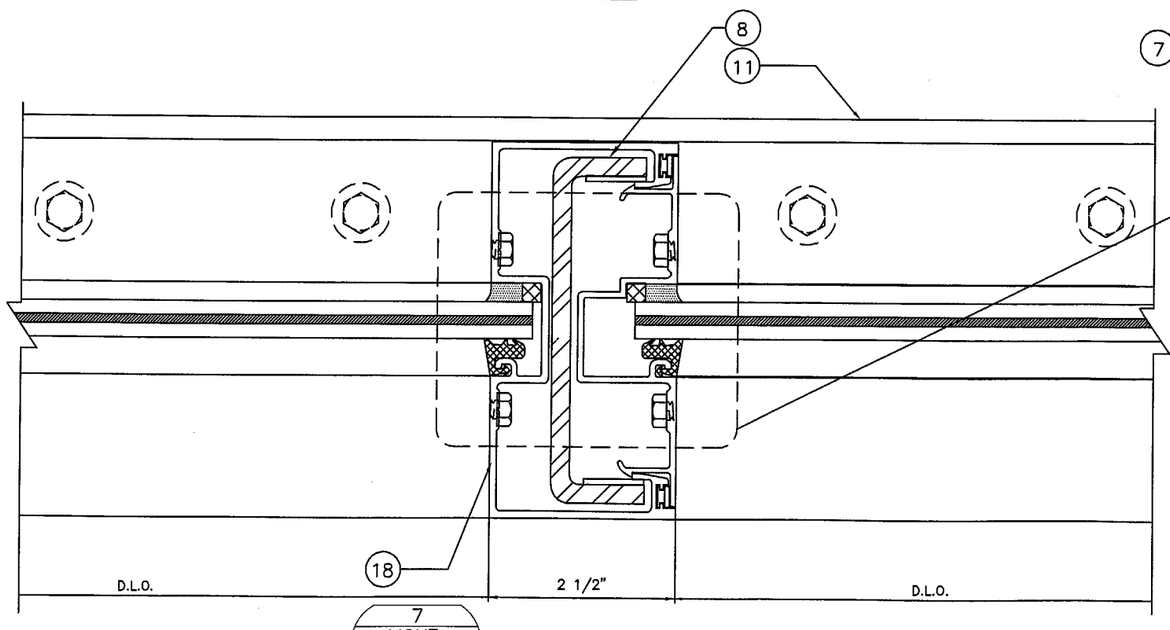

7
LIGHT VERTICAL W/STEEL

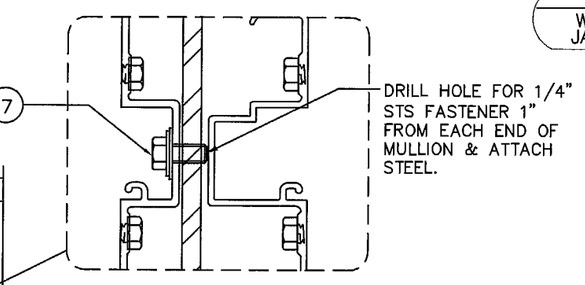

STEEL ATTACHMENT

Lewis A. Waldrop, P.E.
P. O. Box 620
Alto, GA 30510
706-778-3764

Lewis A. Waldrop, P.E.
FLA. P.E. #21959

1/15/04

Approved as complying with the Florida Building Code
Date MARCH 4, 2004
NOA# 04-0209.01
Miami Dade Product Control Division
By

DRAWINGS FOR DADE COUNTY PRODUCT APPROVAL

REV	BY	DATE	DESCRIPTION

MANUAL COMP

VISTAWALL ARCHITECTURAL PRODUCTS
803 AIRPORT RD. TERRELL TX 75160 (972) 551-6100
THE VISTAWALL GROUP
BUTLER MANUFACTURING COMPANY

PROJECT
PRODUCT APPROVAL DRAWINGS
FG-5000 WINDOW WALL SYSTEM
PROTOCOLS: PA 201/202/203

FRAMING DETAILS

PROJECT NO.

DRAWN WRD | DATE 9/11/03

SCALE FULL

DRAWING NO. FG-5000_02

SHEET 8 OF 10

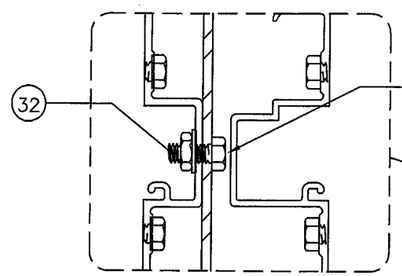

8B
STEEL ATTACHMENT

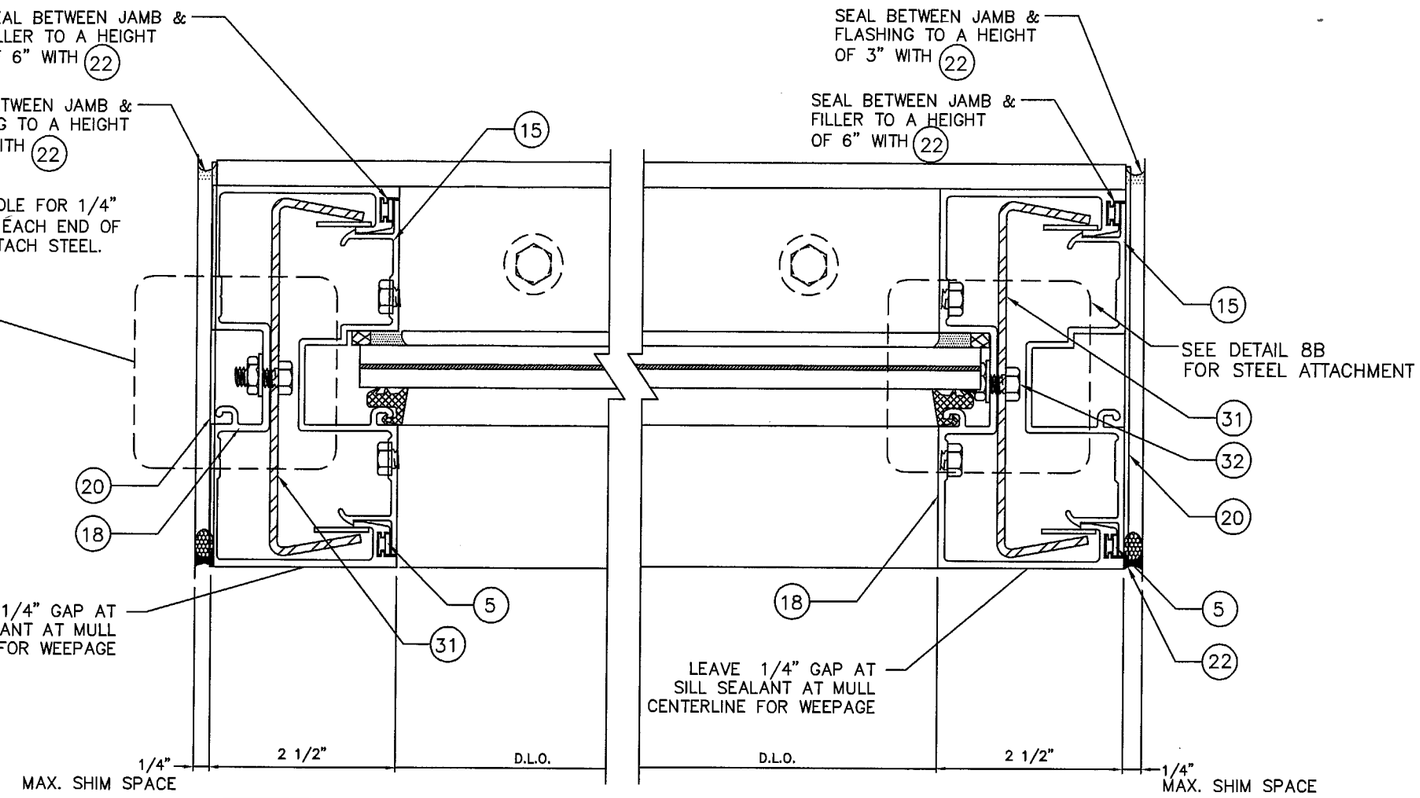

8A
OPTIONAL WALL JAMB

8
OPTIONAL WALL JAMB

Lewis A. Waldrop, P.E.
P. O. Box 620
Alto, GA 30510
706-778-3784

Lewis A. Waldrop, P.E.
FLA. P.E. #21959

1/15/04

Approved as complying with the Florida Building Code
Date MARCH 4, 2004
NOA# 04-0209.01
Miami Dade Product Control Division
By

DRAWINGS FOR DADE COUNTY PRODUCT APPROVAL

REV	BY	DATE	DESCRIPTION

MANUAL COMP

VISTAWALL ARCHITECTURAL PRODUCTS
803 AIRPORT RD. TERRELL TX 75160 (972) 551-6100
THE VISTAWALL GROUP
BUTLER MANUFACTURING COMPANY

PROJECT
PRODUCT APPROVAL DRAWINGS
FG-5000 WINDOW WALL SYSTEM
PROTOCOLS: PA 201/202/203

FRAMING DETAILS

PROJECT NO.

DRAWN WRD | DATE 9/11/03

SCALE FULL

DRAWING NO. FG-5000_02

SHEET 9 OF 10

BILL OF MATERIALS

ITEM No.	PART NUMBER	DESCRIPTION	DIMENSIONS	MATERIAL	MANUFACTURER	NOTES
1.	FG–1133	EXTERIOR GLAZING GASKET	.197 SPACE	EPDM	VARIES	
2.	V2110	INTERIOR SSA TAPE	.312 X .312	THERMAL BOND	NORTON	
3.	FG–5105	SETTING BLOCK SILL & HORIZONAL	4" LONG	EDPM	VISTAWALL	
4.	SM–5601	JOINT SEALANT TAPE	.125 X .50 VARIES	BUTYL	SCHNEE–MOREHEAD	
5.	CW 998	BULB GASKET FOR FILLER	VARIES	FOAM–TITE	AMESBURY	
6.	FS–8	SPLINE ASSEMBLY SCREW	#14 X 1 HHSTS	STEEL	VARIES	
7.	FS–38	ATTACH STEEL REINFORCEMENT	1/4–20 X ½" HH TYPE F	STEEL	VARIES	
8.	FG5000–PP–8	STEEL CHANNEL FOR FG–5121 (MULL)	1.25 X 4.562 X .250	A36 STEEL	VARIES	FULL LENGTH OF MULLION
9.	FG–5110	HEAD	2.50 X 4.98 X .080	6063–T6 ALUMINUM	VISTAWALL	
10.	FG–5113	HEAD FILLER	.50 X 1.697 X .050	6063–T5 ALUMINUM	VISTAWALL	
11.	FG–5166	SUB SILL FLASHING	2.625 X 4.875 X .078	6063–T5 ALUMINUM	VISTAWALL	
12.	FG–5112	SILL	2.50 X 4.703 X .080	6063–T6 ALUMINUM	VISTAWALL	
13.	FG–5165	SILL FILLER	.500 X 2.055 X .062	6063–T6 ALUMINUM	VISTAWALL	
14.	FG–5115	SILL GLAZING BEAD	2.500 X 1.863 X .078	6063–T6 ALUMINUM	VISTAWALL	
15.	FG–5109	OPEN BACK MULLION FILLER	.780 X 4.66 X .08	6063–T6 ALUMINUM	VISTAWALL	
16.	FG–5155	HEAVY WALL VERTICAL MULLION	2.50 X 5.00 X .213	6063–T6 ALUMINUM	VISTAWALL	
17.	FG–5161	WALL JAMB	2.50 X 5.00 X .075	6063–T6 ALUMINUM	VISTAWALL	
18.	FG–5121	LIGHT VERTICAL MULLION	2.50 X 5.00 X .094	6063–T6 ALUMINUM	VISTAWALL	
19.	FG5000–FP–12	ANCHOR PLATE	.375 X 4.00 X .070	6063–T6 ALUMINUM	VISTAWALL	18" LONG–CENTERED ON JAMB
20.	FG5000–FP–10	SILL FLASHING END DAM	2.50 X 1.00 X .062	6063–T6 ALUMINUM	VISTAWALL	5.00" LONG
21.	DOW 995	STRUCTURAL SILICONE	FILL SPACE	SILICONE	DOW CORNING	
22.	921	USED AS PERIMETER SEALANT	FILL SPACE	POLYURETHANE	VULKEM	
23.	FASTENER	FOR ATTACHING HEAD TO STEEL SUBSTRATE	⅜" X 1 1/2" BOLT WITH NUT & WASHER	STEEL SAE J429 GRADE 5	VARIES	1 ½" MIN. SPACING
24.	FASTENER	FOR ATTACHING JAMB TO STEEL SUBSTRATE	⅜" X 2" BOLT WITH NUT & WASHER	STEEL SAE J429 GRADE 5	VARIES	1 ½" MIN. SPACING
25.	FASTENER	FOR ATTACHING SILL TO CONCRETE SUBSTRATE	⅜" X 2 1/2" LONG LD TAPCON	STEEL	VARIES	2" MIN. EMBEDMENT 4 ½" MIN. SPACING
26.	FASTENER	FOR ATTACHING HEAD/SILL TO WOOD SUBSTRATE	⅜" X 2 1/2" LONG LAG BOLTS	STEEL	VARIES	2" MIN. EMBEDMENT 1 ½" MIN. SPACING
27.	FASTENER	FOR ATTACHING JAMB TO WOOD SUBSTRATE	⅜" X 3" LONG LAG BOLTS	STEEL	VARIES	2" MIN. EMBEDMENT 1 ½" MIN. SPACING
28.	POP RIVET	BUTTONHEAD RIVET FOR ATTACHING FG5000–FP–10 TO FG–5166	⅛" DIA X ⅜" – ½" GRIP	STEEL	VARIES	ATTACH AS SHOWN, USE #30 DRILL
29.	FASTENER	FOR ATTACHING SUB SILL FLASHING TO CONCRETE SUBSTRATE	3/16" X 2" SHWH	STEEL	TAPCON	1" MIN. EMBEDMENT SPACE AS REQUIRED NON–STRUCTURAL
30.	FASTENER	FOR ATTACHING SUBSILL FLASHING TO WOOD SUBSTRATE	3/16" X 2" LAG BOLT	STEEL	VARIES	1" MIN. EMBEDMENT SPACE AS REQUIRED NON–STRUCTURAL
31.	FG5000–PP–9	STEEL CHANNEL FOR FG–5121 (JAMB)	1.25 X 4.688 X 12ga	A36 STEEL	VISTAWALL	FULL LENGTH OF MULLION
32.	FS–39 FSN–37 FSW–65	ATTACHMENT OF STEEL REINFORCEMENT	1/4" X 1" HH BOLT W/ 1/4" NUT & (2) LOCKWASHERS	STEEL	VISTAWALL	ATTACH 1" FROM TOP AND 1" FROM BOTTOM
33.	FG–5111	INTERMEDIATE HORIZONTAL	2.50 X 4.98 X .080	6063–T6 ALUMINUM	VISTAWALL	
34.	FG–5114	GLASS STOP FOR INTERM. HORZ.	1.25 X 1.863 X .078	6063–T6 ALUMINUM	VISTAWALL	
35.	FASTENER	FOR ATTACHING JAMB TO CONCRETE	3/8" X 3" LONG LARGE DIA. TAPCON	STEEL	VARIES	2" MIN. EMBEDMENT 4 1/2" MIN. SPACING
36.	FG5000–FP–5 FG5000–FP–6	WATER DEFLECTORS	VARIES	RIGID VINYL	VISTAWALL	RIGHT HAND & LEFT HAND WATER DEFLECTORS @ EACH END OF ITEM #33

Lewis A. Waldrop, P.E.
P. O. Box 620
Alto, GA 30510
706-778-3784

Lewis A. Waldrop, P.E.
FLA. P.E. #21659

Lew Waldrop
1/15/04

Approved as complying with the Florida Building Code
Date MARCH 4 2004
NOA# 04-0209.01
Miami Dade Product Control Division
By Manuel Perez

DRAWINGS FOR DADE COUNTY PRODUCT APPROVAL

REV	BY	DATE	DESCRIPTION

MANUAL COMP

VISTAWALL ARCHITECTURAL PRODUCTS
803 AIRPORT RD. TERRELL TX 75160 (972) 551-6100
THE VISTAWALL GROUP
BUTLER MANUFACTURING COMPANY

PROJECT
PRODUCT APPROVAL DRAWINGS
FG-5000 WINDOW WALL SYSTEM
PROTOCOLS: PA 201/202/203
BILL OF MATERIALS
FRAMING

PROJECT NO.

DRAWN WRD | DATE 9/11/03

SCALE 1"=1'–0"

DRAWING NO. FG–5000_02

SHEET 10 OF 10