MIAMI-DADE

BUILDING CODE COMPLIANCE OFFICE (BCCO)
PRODUCT CONTROL DIVISION

MIAMI-DADE COUNTY, FLORIDA
METRO-DADE FLAGLER BUILDING
140 WEST FLAGLER STREET, SUITE 1603
MIAMI, FLORIDA 33130-1563
(305) 375-2901 FAX (305) 375-2908

NOTICE OF ACCEPTANCE (NOA)

Pittsburgh Corning Corporation.
800 Presque Isle Drive
Pisttsburgh, PA 15239

SCOPE: This NOA is being issued under the applicable rules and regulations governing the use of construction materials. The documentation submitted has been reviewed by Miami-Dade County Product Control Division and accepted by the Board of Rules and Appeals (BORA) to be used in Miami Dade County and other areas where allowed by the Authority Having Jurisdiction (AHJ).

This NOA shall not be valid after the expiration date stated below. The Miami-Dade County Product Control Division (In Miami Dade County) and/or the AHJ (in areas other than Miami Dade County) reserve the right to have this product or material tested for quality assurance purposes. If this product or material fails to perform in the accepted manner, the manufacturer will incur the expense of such testing and the AHJ may immediately revoke, modify, or suspend the use of such product or material within their jurisdiction. BORA reserves the right to revoke this acceptance, if it is determined by Miami-Dade County Product Control Division that this product or material fails to meet the requirements of the applicable building code.

This product is approved as described herein, and has been designed to comply with the Florida Building Code including the High Velocity Hurricane Zone.

DESCRIPTION: Glass Block.

APPROVAL DOCUMENT: Drawing No. KE, titled "KWiK'N EZ Rigid Track Silicone System with THICKSET Series 90 Glass Block", sheets 1 and 2, prepared by Pittsburgh Corning Corporation, dated 01/15/04 with last revision on May 2005, bearing the Miami-Dade County Product Control Approval stamp with the Notice of Acceptance number and approval date by the Miami-Dade County Product Control Division.

MISSILE IMPACT RATING: Large and Small Missile Resistant

LABELING: Each unit shall bear a permanent label with the manufacturer's name or logo, city, state or company logo and the following statement: "Miami-Dade County Product Control Approved" or "MDCPCA", unless otherwise noted herein.

RENEWAL of this NOA shall be considered after a renewal application has been filed and there has been no change in the applicable building code negatively affecting the performance of this product.

TERMINATION of this NOA will occur after the expiration date or if there has been a revision or change in the materials, use, and/or manufacture of the product or process. Misuse of this NOA as an endorsement of any product, for sales, advertising or any other purposes shall automatically terminate it. Failure to comply with any section of this NOA shall be cause for termination and removal of NOA.

ADVERTISEMENT: The NOA number preceded by the words Miami-Dade County, Florida, and followed by the expiration date may be displayed in advertising literature. If any portion of the NOA is displayed, then it shall be done in its entirety.

INSPECTION: A copy of this entire NOA shall be provided to the user by the manufacturer or its distributors and shall be available for inspection at the job site at the request of the Building Official.

This NOA consists of this page, evidence page as well as the approval document mentioned above.

The submitted documentation was reviewed by **Candido F. Font PE**

12/01/05

PRODUCT CONTROL ACCEPTED

Pittsburgh Corning Corporation

NOTICE OF ACCEPTANCE: EVIDENCE SUBMITTED

A DRAWINGS

1. Drawing prepared by Pittsburgh Corning Corporation titled "KWiK'NEZ Rigid Track Silicone System with THICKSET Series 90 Glass Block", Drawing No. KE, dated 01/15/04, with latest revision on May, 2005, Sheets 1 and 2 of 2, signed and sealed by C. D. Hays, PE

B TEST

1. Test Report of Large Missile Impact Resistant Test Per TAS 201, Uniform Static Air Pressure Test per TAS 202 and Cyclic Wind Pressure Loading Test Per TAS 203 on "Series/Model 8" x 8" x 4" Thickset 90", prepared by Architectural Testing Report #01-44639.03, dated 12/02/03, signed and sealed by J. A Reed, PE

C CALCULATIONS

1. Calculations prepared by Engineering Analytics, Inc sheets 1 through 4, of Thickset Series Fasteners, dated 05/02/05 signed and sealed by C. D. Hays PE.

D QUALITY ASSURANCE

1. Building Code Compliance Office.

E STATEMENT

1. Code compliance letter issued by Engineering Analytics, Inc. on 02/26/04 signed and sealed by C. D. Hays PE.
2. No financial Interest letter issued by Pittsburgh Corning Corporation on 01/22/04 signed N. T. Loomis and notarized by J. A. Stephens.

12/01/05

Candido F. Font PE
Senior Product Control Examiner
NOA N: 04-0301.01
Expiration Date: December 1, 2010
Approval Date: December 11, 2005

Page 1 - Layouts

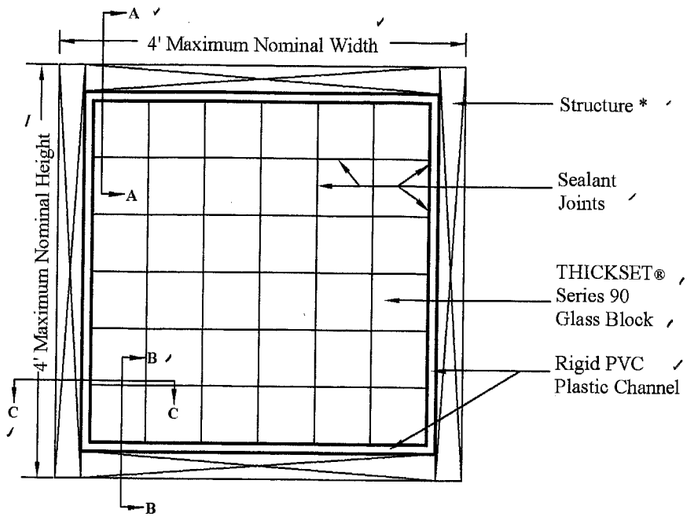

Impact Resistant
Design Pressure Rating
+/- 100 PSF

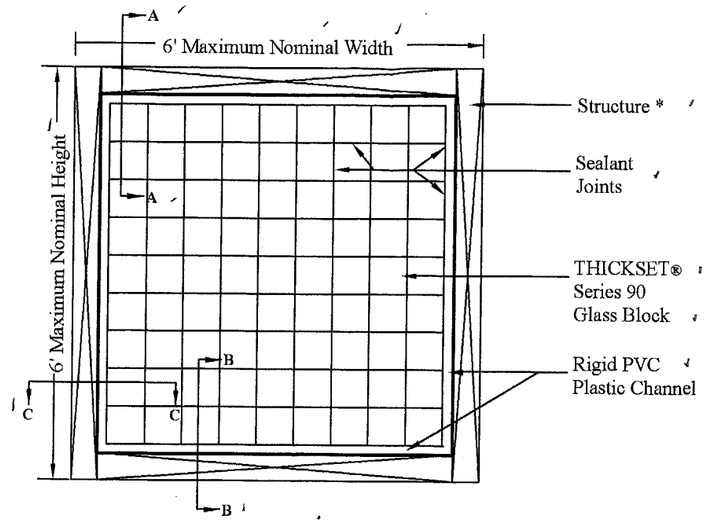

Impact Resistant
Design Pressure Rating
+/- 68 PSF

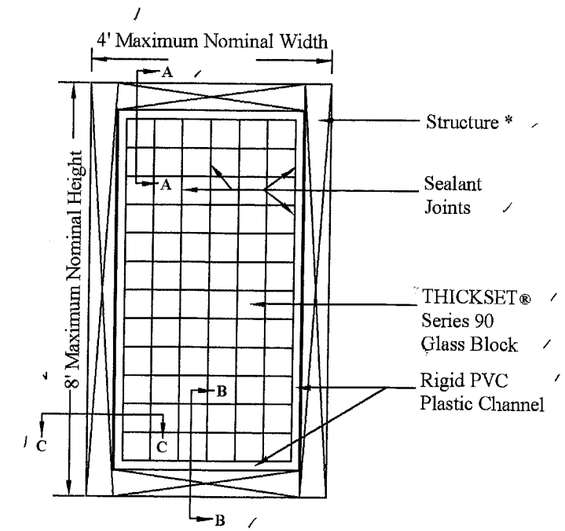

Impact Resistant
Design Pressure Rating
+/- 80 PSF

Specifications:

- Glass Block Units: THICKSET® 90 Series 8" x 8" x 4" or 6" x 6" x 4" (nominal size).
- Frame and Spacers: Extruded white rigid PVC. Frame corners are cut square or mitered and are silicone sealed. Extruded by Quaker Plastic Corporation with NOA # 05-0912.08
- Sealant: Pittsburgh Corning Glass Block Sealant. One part neutral fast curing structural silicone sealant.
- Sealant Locations: All horizontal and vertical glass block joints; inside corners of perimeter channels; two beads (1/2" from each edge) between back of perimeter channles and framing members; two beads each above and below "long" horizontal spacer (no sealant required for "short" vertical spacer); perimeter joints between glass block and channel legs; and perimeter joints between channels and framing members.
- Reinforcement: PVC spacers between all horizontal and vertical joints. Spacers in channels are not required.
- Anchorage: Secure perimeter channel to wood frame with # 6 x 1" flat head galvanized screws in pre-drilled holes, staggered 6" to 7" O.C.
- For masonry attachment: Secure wood frame (buck) using 3/16" x 1" embedment depth Hilti Kwik-Con II fasteners or equal at 6" to 7" O.C. Countersink fastener heads into wood frame. Secure perimeter channel to wood frame using anchorage described above.
- Shim Spaces: For shim spaces up to 1/4" between the perimeter channel and wood frame, use either #6 x 1-1/2" flat head galvanized screws @ 3" O.C., or #8 x 1-1/2" flat head galvanized screws @ 4" O.C. All screws to be secured through all shims.

Approved as complying with the Florida Building Code
Date 12/01/05
NOA# 04-0301.01
Miami Dade Product Control Division
By

Pittsburgh Corning Glass Block

Series	Pattern	Nominal Dimensions	Face Thickness
Thickset® 90	DECORA®	8" x 8"x 4" 6" x 6"x 4"	0.75 in. 0.75 in.
Thickset® 90	VUE®	8" x 8"x 4" 6" x 6"x 4"	0.75 in. 0.75 in.
Thickset® 90	ENDURA®	8" x 8"x 4"	0.75 in.

Revisions:
(1) Deleted reference to PVC-NOA in second specifications note.
(2) Added shim spaces to specifications.

Carrie D. Harp
PE36806
10/12/05

KWiK'N EZ® Rigid Track Silicone System with THICKSET® Series 90 Glass Block

DESIGN	N.T.L.	SCALE	N.T.S.	REV.	(1)	(2)	PITTSBURGH CORNING CORP.	DRAWING #	SHEET
DRAWN	R. Bender	DATE	1/15/04	BY	NTL	NTL	800 PRESQUE ISLE DRIVE	KE	1 OF 2
CHECK	N.T.L.	DATE	1/15/04	DATE	8/04	5/05	PITTSBURGH, PA 15239		

Page 2 - Details

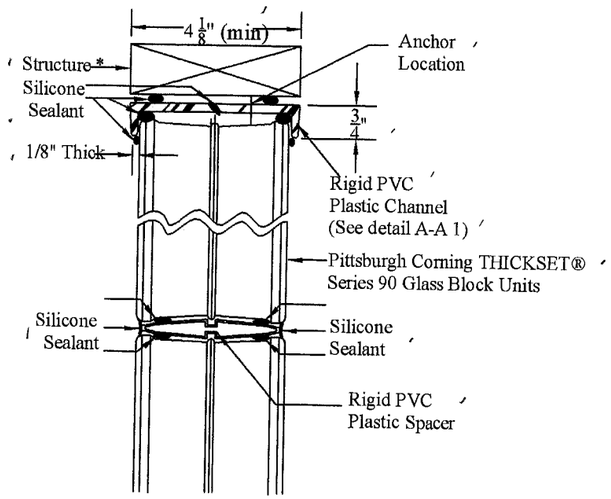

Detail A-A (Head)

* The structure can be any approved material as long as the screw anchors have the same spacing and capacity.

Detail A-A 1 (Channel at Head)

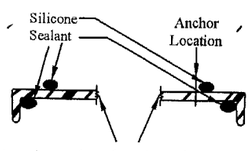

Perimeter channel, at head, to be cut lengthwise down the center for installation of last row of glass block.

The part of half channel that is secured with screws, should be on the exterior side.

1/4" bead of sealant applied horizontally across the top inside corners of channel halves.

Revisions:

(1) Added cross section details of channel and spacer

Detail B-B (Sill)

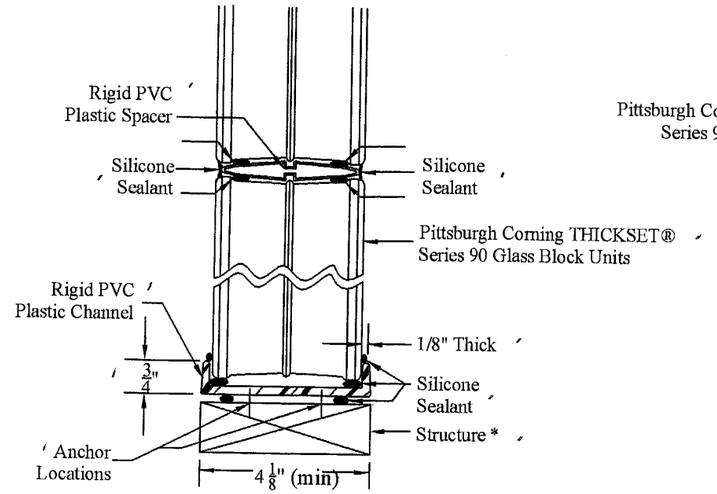

Detail C-C (Jamb)

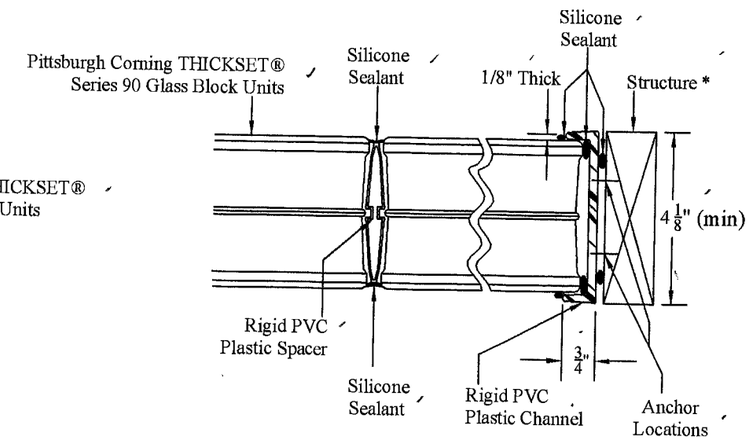

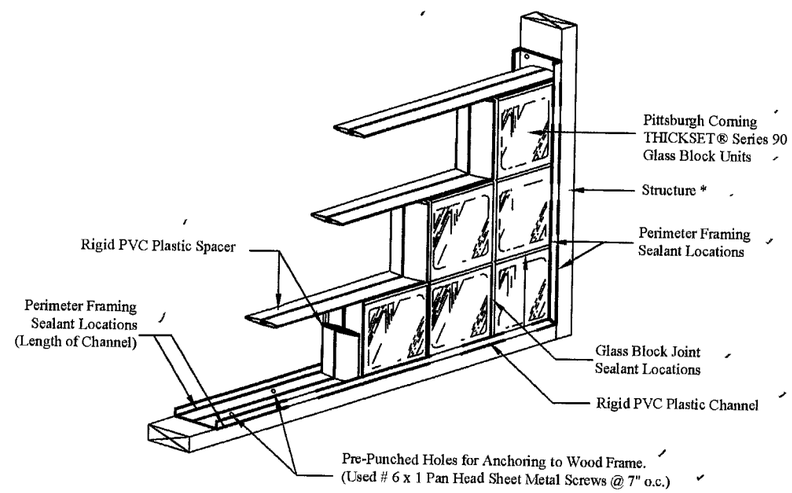

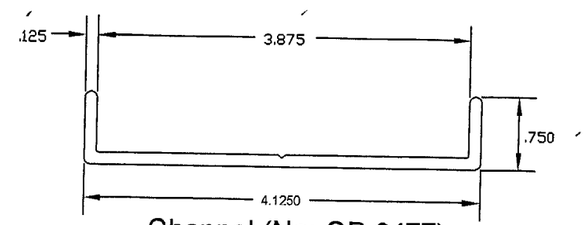

Channel (No: QP-0477)
NOA # 05-0912.08

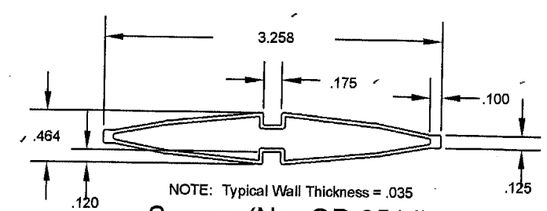

Spacer (No. QP-0514)
NOA # 05-0912.08

Approved as complying with the Florida Building Code
Date 12/01/05
NOA# 04-0301.01
Miami Dade Product Control Division
By

Carve J Hoop
PE36806
10/12/05

KWiK'N EZ® Rigid Tract Silicone System with THICKSET® Series 90 Glass Block								
DESIGN	N.T.L.	SCALE	N.T.S.	REV.	(1)	PITTSBURGH CORNING CORP. 800 PRESQUE ISLE DRIVE PITTSBURGH, PA 15239	DRAWING# KE	SHEET 2 OF 2
DRAWN	R. Bender	DATE	1/15/04	BY	NTL			
CHECK	N.T.L.	DATE	1/15/04	DATE	8/04			