MIAMI-DADE

BUILDING CODE COMPLIANCE OFFICE (BCCO)
PRODUCT CONTROL DIVISION

MIAMI-DADE COUNTY, FLORIDA
METRO-DADE FLAGLER BUILDING
140 WEST FLAGLER STREET, SUITE 1603
MIAMI, FLORIDA 33130-1563
(305) 375-2901 FAX (305) 375-2908

NOTICE OF ACCEPTANCE (NOA)

Kinco, Ltd.
5245 Old Kings Road N.
Jacksonville, FL 32254

SCOPE:

This NOA is being issued under the applicable rules and regulations governing the use of construction materials. The documentation submitted has been reviewed by Miami-Dade County Product Control Division and accepted by the Board of Rules and Appeals (BORA) to be used in Miami Dade County and other areas where allowed by the Authority Having Jurisdiction (AHJ).

This NOA shall not be valid after the expiration date stated below. The Miami-Dade County Product Control Division (In Miami Dade County) and/or the AHJ (in areas other than Miami Dade County) reserve the right to have this product or material tested for quality assurance purposes. If this product or material fails to perform in the accepted manner, the manufacturer will incur the expense of such testing and the AHJ may immediately revoke, modify, or suspend the use of such product or material within their jurisdiction. BORA reserves the right to revoke this acceptance, if it is determined by Miami-Dade County Product Control Division that this product or material fails to meet the requirements of the applicable building code.

This product is approved as described herein, and has been designed to comply with the Florida Building Code, including the High Velocity Hurricane Zone.

DESCRIPTION: Series MPSGD Aluminum Sliding Glass Door (L.M.I.)

APPROVAL DOCUMENT: Drawing No. **W04-10**, titled "Series -MPGSD Alum Sliding Glass Door (L.M.I.)", sheets 1 through 6 of 6, dated 02/11/04, prepared by Al- Farooq Corporation, signed and sealed by Humayoun Farooq, P.E., bearing the Miami-Dade County Product Control Approval stamp with the Notice of Acceptance number and approval date by the Miami-Dade County Product Control Division.

MISSILE IMPACT RATING: Large and Small Missile Impact

LABELING: Each unit shall bear a permanent label with the manufacturer's name or logo, city, state and following statement: "Miami-Dade County Product Control Approved", unless otherwise noted herein.

RENEWAL of this NOA shall be considered after a renewal application has been filed and there has been no change in the applicable building code negatively affecting the performance of this product.

TERMINATION of this NOA will occur after the expiration date or if there has been a revision or change in the materials, use, and/or manufacture of the product or process. Misuse of this NOA as an endorsement of any product, for sales, advertising or any other purposes shall automatically terminate this NOA. Failure to comply with any section of this NOA shall be cause for termination and removal of NOA.

ADVERTISEMENT: The NOA number preceded by the words Miami-Dade County, Florida, and followed by the expiration date may be displayed in advertising literature. If any portion of the NOA is displayed, then it shall be done in its entirety.

INSPECTION: A copy of this entire NOA shall be provided to the user by the manufacturer or its distributors and shall be available for inspection at the job site at the request of the Building Official.

This NOA consists of this page 1 and evidence pages E-1 and E-2, as well as approval document mentioned above.

The submitted documentation was reviewed by **Theodore Berman, P.E.**

4/28/2004

PRODUCT CONTROL ACCEPTED

NOA No 04-0302.02
Expiration Date: May 20, 2009
Approval Date: May 20, 2004

Kinco, Ltd.

NOTICE OF ACCEPTANCE: EVIDENCE SUBMITTED

A. DRAWINGS

1. Manufacturers die drawings and sections.
2. Drawing No. **W04-10**, titled "Series-MPSGD Alum Sliding Glass Door (L.M.I.)", sheets 1 through 6 of 6, dated 02/11/04, prepared by AL-Farooq Corporation, signed and sealed by Humayoun Farooq, P.E.

B. TESTS

1. Test reports on 1) Air Infiltration Test, per FBC, TAS 202-94
   2) Uniform Static Air Pressure Test, Loading per FBC, TAS 20294
   3) Water Resistance Test, per FBC, TAS 202-94
   4) Large Missile Impact Test per FBC, TAS 201-94
   5) Cyclic Wind Pressure Loading per FBC, TAS 203-94
   6) Forced Entry Test, per FBC 2411 3.2.1 and TAS 202-94

   along with marked-up drawings of an aluminum sliding glass door, prepared by Certified Testing Laboratories Architectural Division, Test Report No. **CTLA-12606-W**, dated 12/23/03, signed and sealed by Ramesh Patel, P.E.
2. Test reports on 1) Large Missile Impact Test per FBC, TAS 201-94
   2) Cyclic Wind Pressure Loading per FBC, TAS 203-94

   along with marked-up drawings of an aluminum sliding glass door, prepared by Certified Testing Laboratories Architectural Division, Test Report No. **CTLA-12606-W-1**, dated 01/28/04, signed and sealed by Ramesh Patel, P.E

C. CALCULATIONS

1. Anchor Calculations, ASTM-E1300, and structural analysis, prepared by AL-Farooq Corporation, dated 02/10/04, signed and sealed by Humayoun Farooq, P.E.

D. QUALITY ASSURANCE

1. Miami Dade Building Code Compliance Office (BCCO).

E. MATERIAL CERTIFICATIONS

1. Notice of acceptance No. **01-1204.01** issued to "E.I. Dupont DeNemours" for "Sentry Glass ® Plus" approved on 01/17/02 and expiring on 01/14/07.
2. Notice of Acceptance No. **03-0421.02** issued to "Solutia Inc." for "Saflex IIIG " approved on 01/08/04 and expiring on 05/21/06.

Theodore Berman, P.E.
Deputy Director, Product Control Division
NOA No 04-0302.02
Expiration Date: May 20, 2009
Approval Date: May 20, 2004

NOTICE OF ACCEPTANCE: EVIDENCE SUBMITTED

F. STATEMENTS

1. Statement letter of conformance, dated February 10, 2004, signed and sealed by Humayoun Farooq, P.E.
2. Statement letter of no financial interest, dated February 10, 2004, signed and sealed by Humayoun Farooq, P.E.

G. OTHER

1. Letter from consultant stating that the product is in compliance with the Florida Building Code (FBC).

Theodore Berman, P.E.
Deputy Director, Product Control Division
NOA No 04-0302.02
Expiration Date: May 20, 2009
Approval Date: May 20, 2004

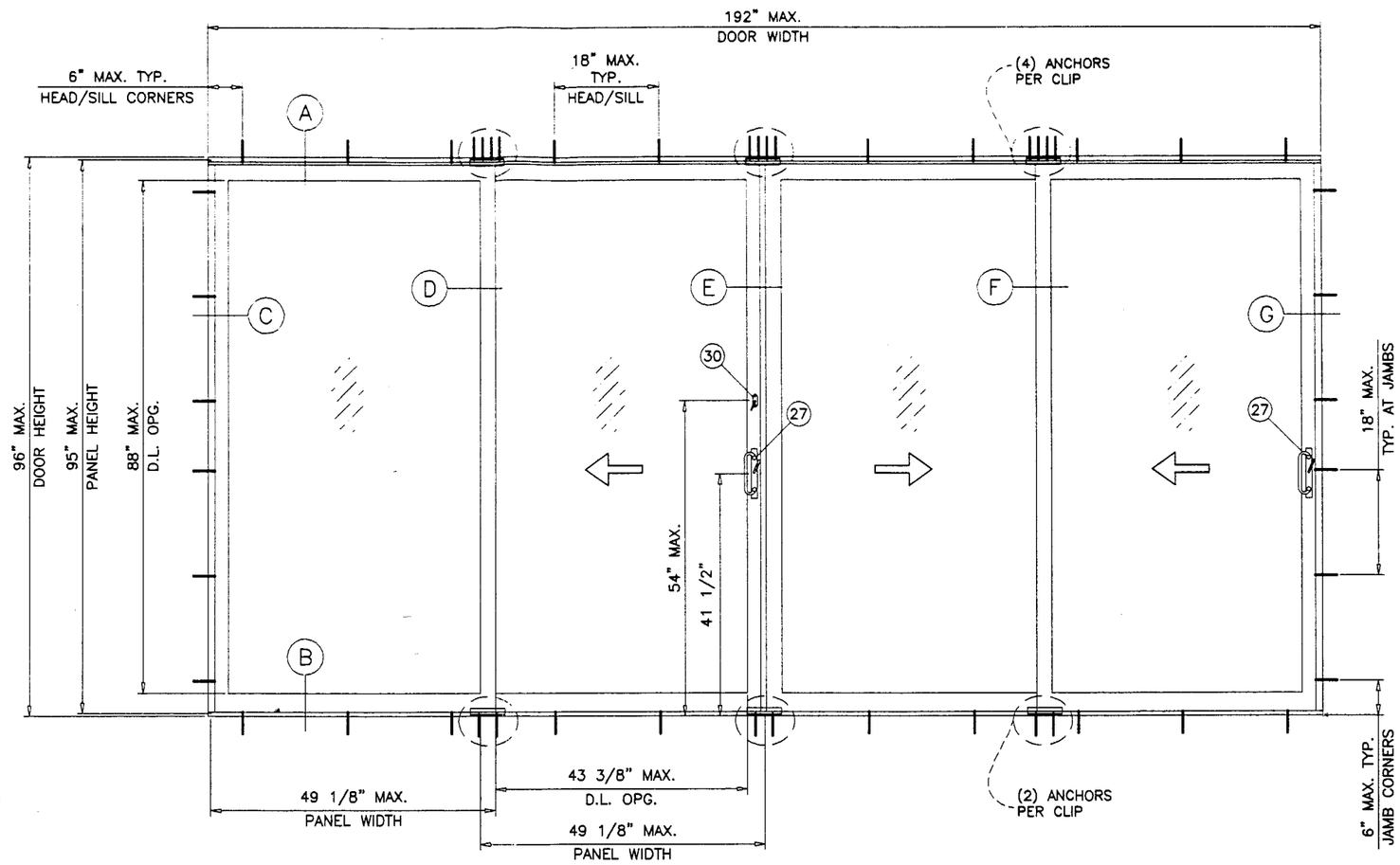

TYPICAL ELEVATION
TESTED UNIT

DOORS GLAZED WITH LAMINATED GLASS RATED FOR LARGE MISSILE IMPACT AND REQUIRE NO SHUTTERS.

SERIES-MPSGD ALUM SLIDING GLASS DOOR (L.M.I.)

DESIGN LOAD RATING FOR DOORS TO BE AS PER CHART SHOWN ON SHEET 2.

THIS PRODUCT IS DESIGNED TO COMPLY WITH THE HIGH VELOCITY HURRICANE ZONE OF THE 2001 FLORIDA BUILDING CODE.

WOOD BUCKS BY OTHERS, MUST BE ANCHORED PROPERLY TO TRANSFER LOADS TO THE STRUCTURE.

ANCHORS SHALL BE AS LISTED, SPACED AS SHOWN ON DETAILS. ANCHOR EMBEDMENT TO BASE MATERIAL SHALL BE BEYOND WALL DRESSING OR STUCCO.

ANCHORING OR LOADING CONDITIONS NOT SHOWN IN THESE DETAILS ARE NOT PART OF THIS APPROVAL.

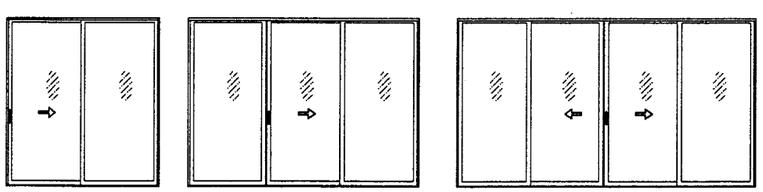

XO (SHOWN)
OX
XX

OXO (SHOWN)

OXXO

APPROVED CONFIGURATIONS

TWO TRACK FRAME DOOR CONFIGURATIONS OF MORE THAN FOUR PANELS USING STILE COMBINATIONS SHOWN IN THESE DETAILS MAY ALSO BE APPROVED (EXAMPLE OOXXOO).

Approved as complying with the Florida Buiding Code
Date 05/20/04
NOA# 04-0302.02
Miami Dade Product Control Division
By [signature]

Engr: DR. HUMAYOUN FAROOQ
STRUCTURES
FLA. PE # 16557
C.A.N. 3538

APR 12 2004

AL-FAROOQ CORPORATION
ENGINEERS, PLANNERS & PRODUCT DESIGN
1235 SW 87 AVE
MIAMI, FLORIDA 33174
TEL. (305) 264-8100 FAX. (305) 262-6978

COMP-ANL\W04-10KL

SERIES-MPSGD ALUM SLIDING GLASS DOOR (L.M.I.)

KINCO LTD.
280 S.W. 14 th AVE
POMPANO BEACH, FL 33069
TEL. (305) 783-0111

revisions:

no	date	by	description
A	03.19.04		REV. PER BCCO COMMENTS

date: 02-11-04
scale: 1/2"=1'-0"
dr. by: HAMID
chk. by:

drawing no.
W04-10

sheet 1 of 6

DESIGN LOAD CAPACITY - PSF GLASS TYPES 'A', 'A1' OR 'B', 'B1'					
PANEL WIDTH NOMINAL	DOOR HEIGHT	2-1/2" SILL		3-1/4" SILL	
		EXT. (+)	INT. (-)	EXT. (+)	INT. (-)
36"	80"	50.0	80.0	70.0	80.0
40"		50.0	80.0	70.0	80.0
44"		50.0	80.0	70.0	80.0
48"		50.0	80.0	70.0	80.0
52"		50.0	80.0	70.0	80.0
56"		50.0	80.0	70.0	80.0
36"	96"	50.0	80.0	70.0	80.0
40"		50.0	80.0	70.0	80.0
44"		50.0	80.0	70.0	80.0
48"		50.0	80.0	70.0	80.0

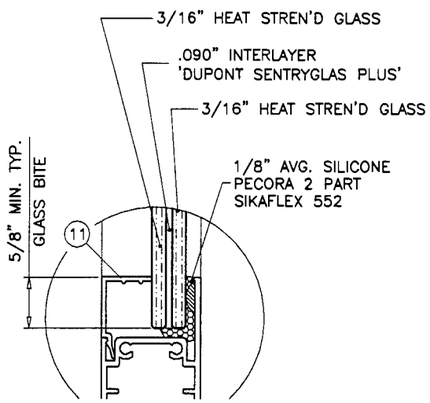

GLASS TYPE 'A'

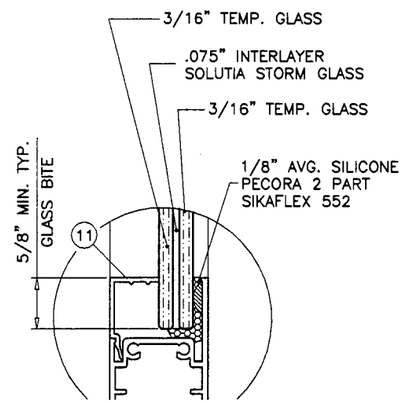

GLASS TYPE 'B'

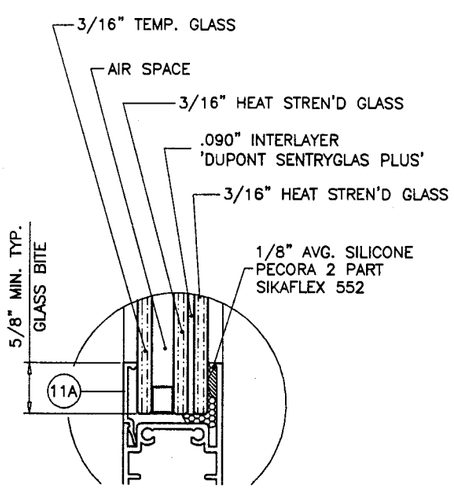

GLASS TYPE 'A1'

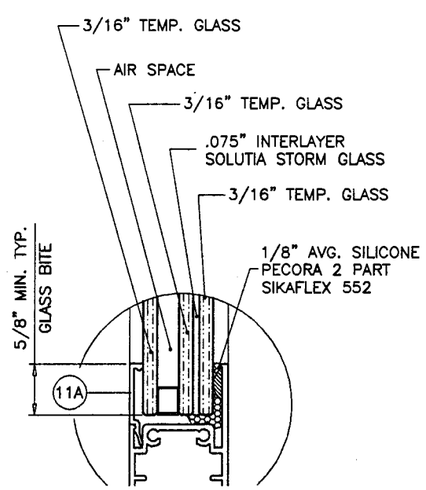

GLASS TYPE 'B1'

ITEM #	PART #	QUANTITY	DESCRIPTION	MATERIAL	MANF./SUPPLIER/REMARKS
1	KCO-295	1	FRAME HEAD	6063-T6	-
2	KCO-317	1	FRAME SILL (2-1/2" LEG)	6063-T6	-
2A	KCO-318	1	FRAME SILL (3-1/4" LEG)	6063-T6	-
3	KCO-304	1	FRAME JAMB	6063-T6	-
4	KCO-313	1/ PANEL	TOP RAIL	6063-T6	-
5	-	-	-	-	-
6	KCO-312	1/ PANEL	BOTTOM RAIL	6063-T6	-
7	KCO-302	AS REQD.	LOCK STILE	6063-T6	-
8	KCO-305	AS REQD.	INNER INTERLOCK	6063-T6	-
9	KCO-308	AS REQD.	OUTER INTERLOCK	6063-T6	-
10	KCO-310	AS REQD.	ASTRAGAL STILE	6063-T6	-
11	RP-931	AS REQD.	GLASS STOP (LAM. GLASS)	RIGID PVC	-
11A	RP-930	AS REQD.	GLASS STOP (INSUL. GLASS)	RIGID PVC	-
12	KCO-303	AS REQD.	INNER INTERLOCK STIFFENER	6063-T6	-
13	KCO-306	AS REQD.	OUTER INTERLOCK STIFFENER	6063-T6	-
14	KCO-300	AS REQD.	ASTRAGAL STIFFENER	6063-T6	-
16	KCO-309	AS REQD.	HEAD/SILL RETAINING CLIP	6063-T6	6" LONG
17	KCO-020	2/ FIX. PANEL	FIX. PANEL SKATE	DELRIN	2-1/2" LONG
18	KCO-019	4/ PANEL	PANEL TOP GUIDE	DELRIN	AT TOP RAIL CORNERS
19	KCO-319	1/ FIX. PANEL	FIX. PANEL CLIP	6063-T6	FULL LENGTH
20	-	-	-	-	-
21	-	AS REQD.	PILE WITH FIN W'STRIPPING	-	.380" X .187"
22	-	2/ PANEL	BOTTOM RAIL W'STRIPPING	VINYL	.030" X .700"
23	#10 X 1"	8/ PANEL	PANEL ASSY SCREWS	-	PH SMS
25	-	-	-	-	-
26	-	2/ MOV. PANEL	ROLLER ASSEMBLY	-	-
27	SL-3182B	1/ MOV. PANEL	LATCH ASSEMBLY	-	BY MBC
28	-	1/ LOCK	KEEPER	-	-
30	SL-3182B	*	UPPER LATCH	-	BY MBC
31	-	AS REQD.	SELF ADHESIVE PILE PAD	WOOL	AT HEAD AND SILL

* AT MALE ASTRAGAL ONLY
USE LEVER #SL-3181S ON INSIDE FACE OF STILE ONLY
AND NO EXTERIOR OR INTERIOR PULL HANDLES.

Approved as complying with the
Florida Buiding Code
Date 05/20/04
NOA# 04-0302.02
Miami Dade Product Control
Division
By Theodore Barman

Engr: DR. HUMAYOUN FAROOQ
STRUCTURES
FLA. PE # 16557
C.A.N. 3538

APR 12 2004

AL-FAROOQ CORPORATION
ENGINEERS, PLANNERS & PRODUCT DESIGN
1235 SW 87 AVE
MIAMI, FLORIDA 33174
TEL. (305) 264-8100 FAX. (305) 262-6978

COMP-ANL\W04-10KL

SERIES-MPSGD ALUM SLIDING GLASS DOOR (L.M.I.)

KINCO LTD.
280 S.W. 14 th AVE
POMPANO BEACH, FL 33069
TEL. (305) 783-0111

revisions:

no	date	by	description
A	03.19.04		REV. PER BCCO COMMENTS

date: 02-11-04
scale: 1/2" = 1"
dr. by: HAMID
chk. by:

drawing no.
W04-10

sheet 2 of 6

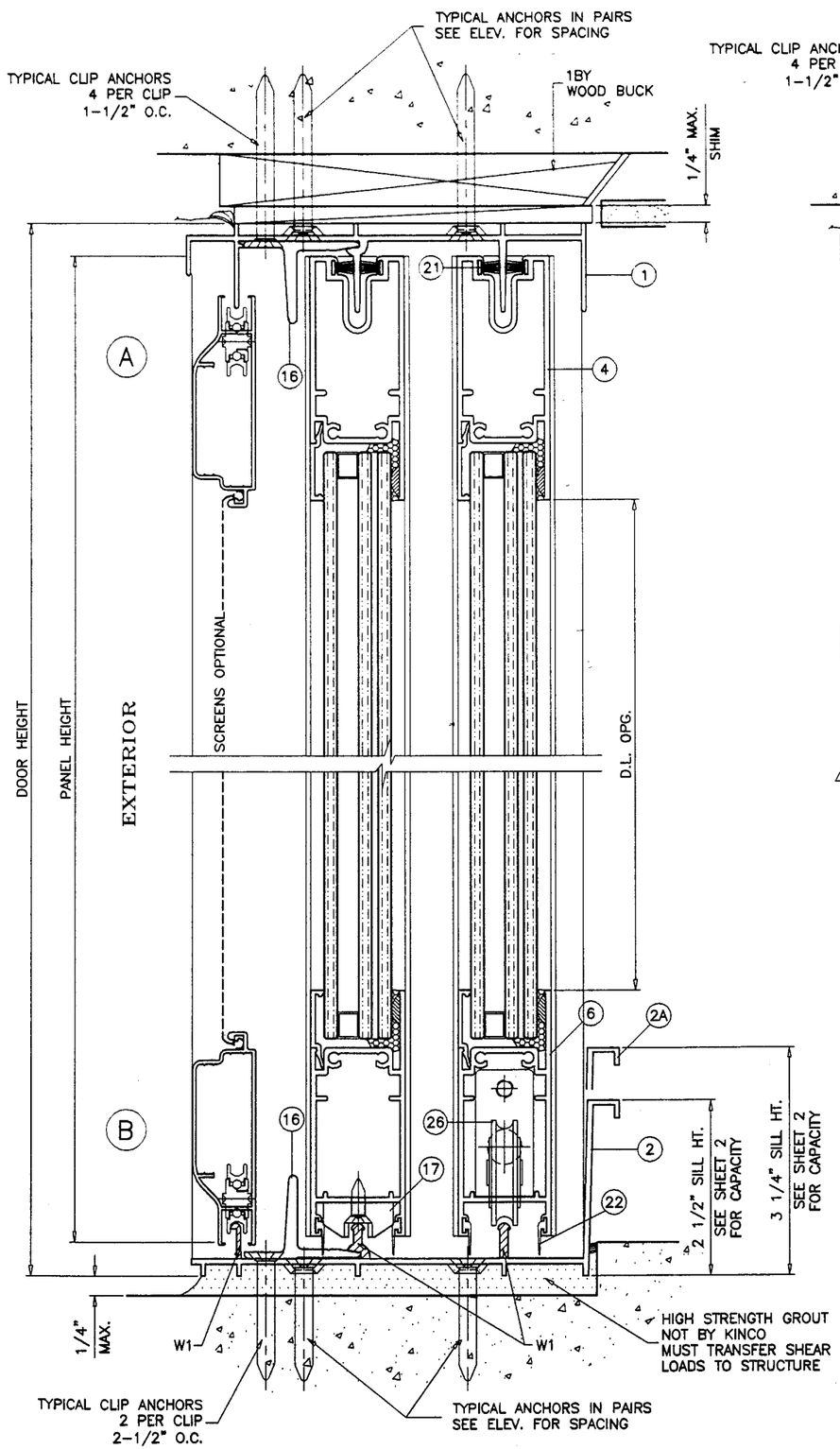

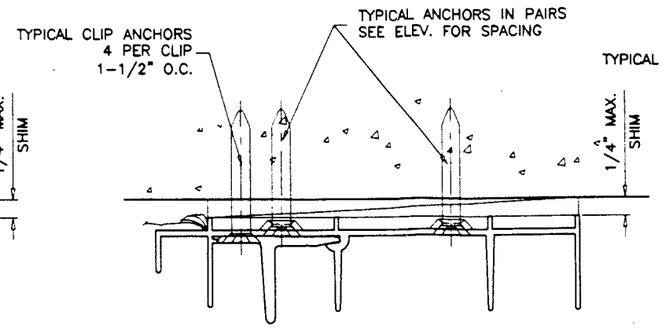

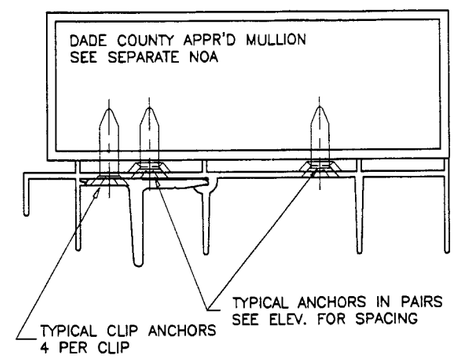

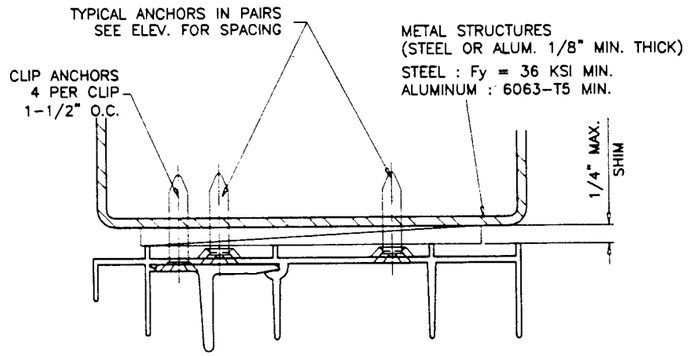

WOOD BUCKS NOT BY KINCO, MUST SUSTAIN LOADS IMPOSED BY GLAZING SYSTEM AND TRANSFER THEM TO THE BUILDING STRUCTURE.

TYPICAL ANCHORS: SEE ELEV. FOR SPACING

1/4" TAPCONS

INTO 2BY WOOD BUCKS OR WOOD STRUCTURE
1-3/8" MIN. PENETRATION INTO WOOD

THRU 1BY BUCKS INTO CONC. OR MASONRY
1-1/4" MIN. EMBED INTO CONC. OR MASONRY

DIRECTLY INTO CONC. OR MASONRY
1-1/4" MIN. EMBED INTO CONC. OR MASONRY

1/4" TEKS OR SELF DRILLING SCREWS (GRADE 5 CRS)

INTO METAL STRUCTURES (1/8" MIN. THICKNESS)
(1/4" MAX. SHIM SPACE)

#10 SMS OR SELF DRILLING SCREWS

INTO DADE COUNTY APPROVED MULLIONS
(NO SHIM SPACE)

SEALANT:

ALL JOINTS AND FRAME CONNECTIONS SEALED WITH WHITE/ALUMINUM COLORED SEALANT.

WEEPHOLES:

W1 = 2-5/8" WEEP NOTCH AT EACH END

Approved as complying with the Florida Building Code
Date 05/20/04
NOA# 04-0302.02
Miami Dade Product Control Division
By [signature]

Engr: DR. HUMAYOUN FAROOQ
STRUCTURES
FLA. PE # 16557
C.A.N. 3538
APR 12 2004

AL-FAROOQ CORPORATION
ENGINEERS, PLANNERS & PRODUCT DESIGN
1235 SW 87 AVE
MIAMI, FLORIDA 33174
TEL. (305) 264-8100 FAX. (305) 262-6978
COMP-ANL\W04-10KL

SERIES-MPSGD ALUM SLIDING GLASS DOOR (L.M.I.)

KINCO LTD.
280 S.W. 14 th AVE
POMPANO BEACH, FL 33069
TEL. (305) 783-0111

revisions:

no	date	by	description
A	03.19.04		NO CHANGE THIS SHEET

date: 02-11-04
scale: 1/2" = 1"
dr. by: HAMID
chk. by:

drawing no.
W04-10

sheet 3 of 6

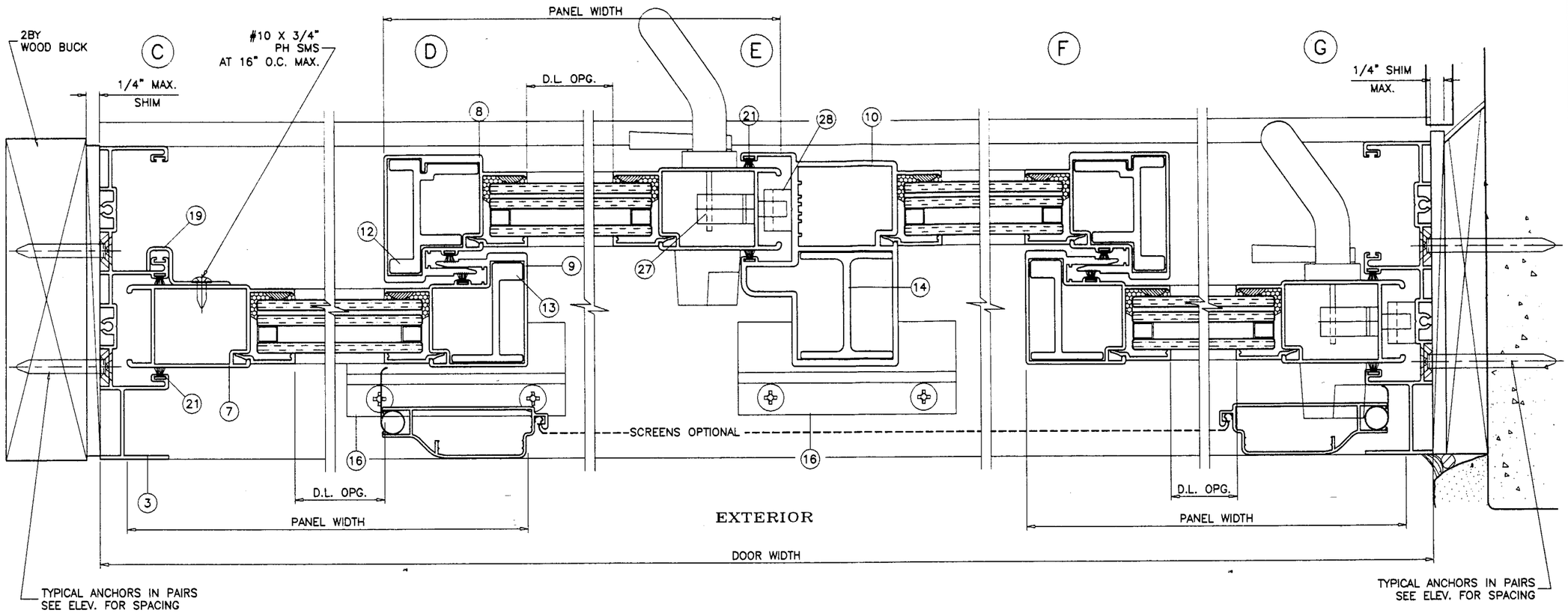

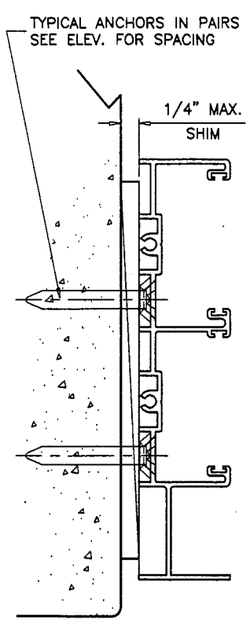

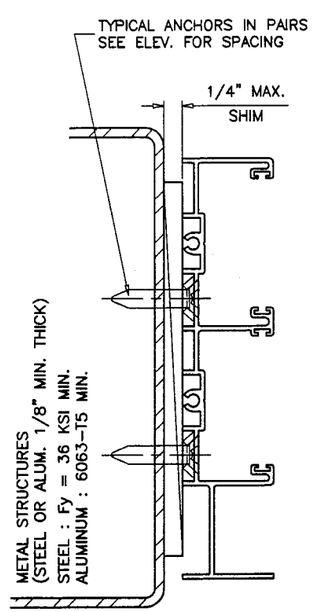

Approved as complying with the
Florida Building Code
Date 05/20/04
NOA# 04-0302.02
Miami Dade Product Control
Division
By

Engr: DR. HUMAYOUN FAROOQ
STRUCTURES
FLA. PE # 16557
C.A.N. 3538

APR 12 2004

AL-FAROOQ CORPORATION
ENGINEERS, PLANNERS & PRODUCT DESIGN
1235 SW 87 AVE
MIAMI, FLORIDA 33174
TEL. (305) 264-8100 FAX. (305) 262-6978
COMP-ANL\W04-10KL

SERIES-MPSGD ALUM SLIDING GLASS DOOR (L.M.I.)

KINCO LTD.
280 S.W. 14 th AVE
POMPANO BEACH, FL 33069
TEL. (305) 783-0111

revisions:

no	date	by	description
A	03.19.04		NO CHANGE THIS SHEET

date: 02-11-04
scale: 1/2" = 1"
dr. by: HAMID
chk. by:

drawing no.
W04-10

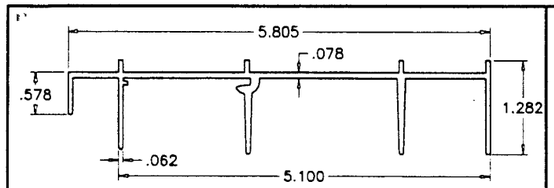

1 FRAME HEAD

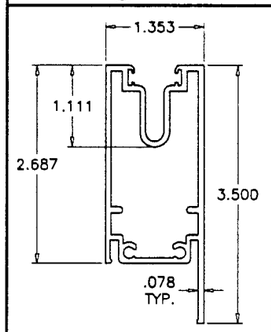

4 PANEL TOP RAIL

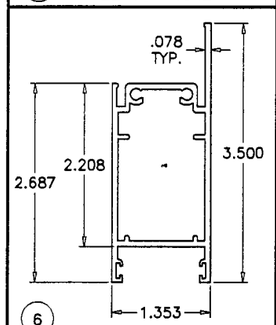

6 PANEL BOTTOM RAIL

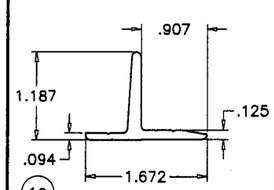

16 HEAD/SILL RETAINING CLIP

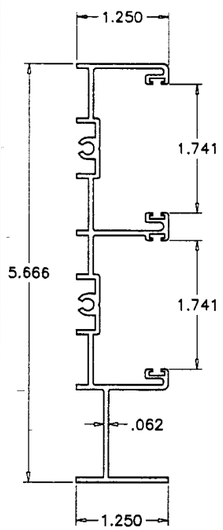

3 FRAME JAMB

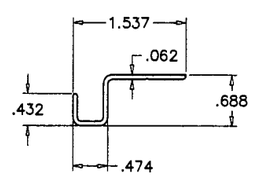

19 FIXED PANEL CLIP

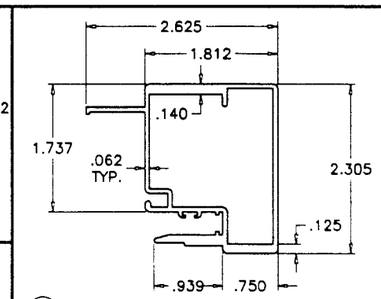

8 INNER INTERLOCK

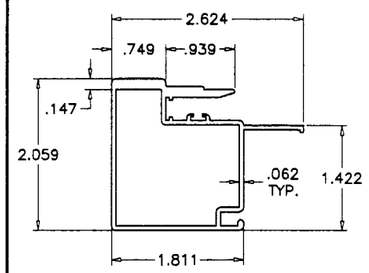

9 OUTER INTERLOCK

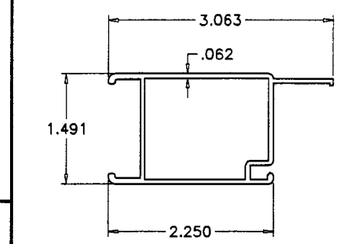

7 LOCK STILE

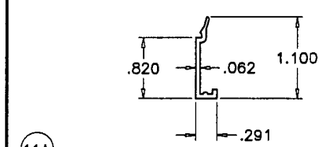

11A GLASS STOP INSULATED GLASS

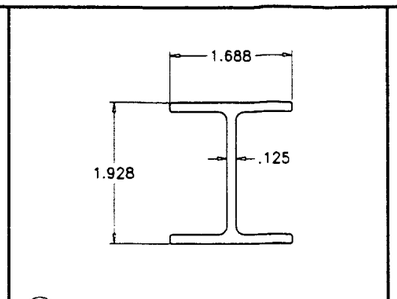

14 FEMALE ASTRAGAL STIFFENER

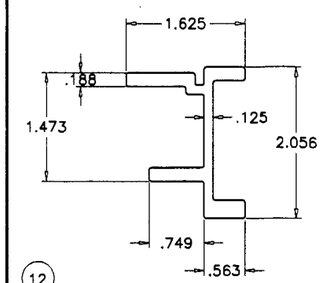

12 INNER INTERLOCK STIFFENER

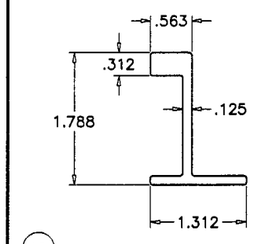

13 OUTER INTERLOCK STIFFENER

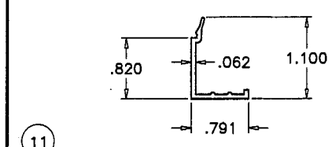

11 GLASS STOP LAMINATED GLASS

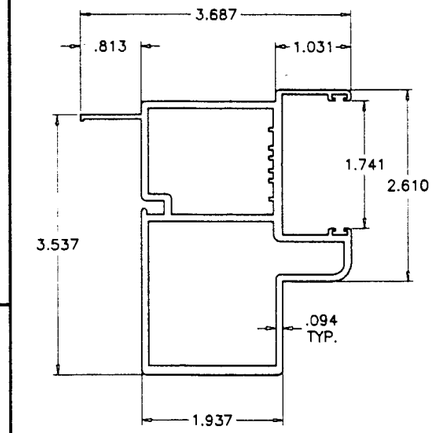

10 ASTRAGAL STILE

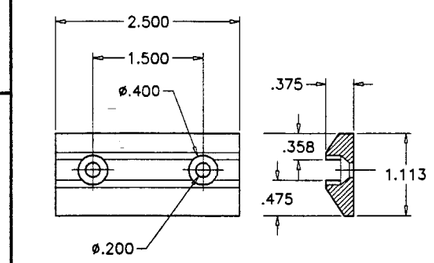

17 FIX. PANEL SKATE

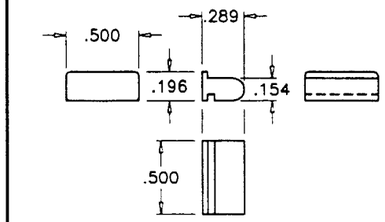

18 PANEL TOP GUIDE
SCALE 1:1

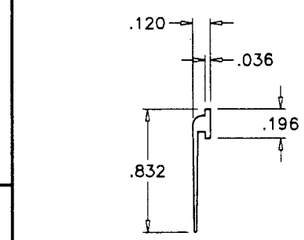

22 BOTTOM RAIL W'STRIPPING
SCALE 1:1

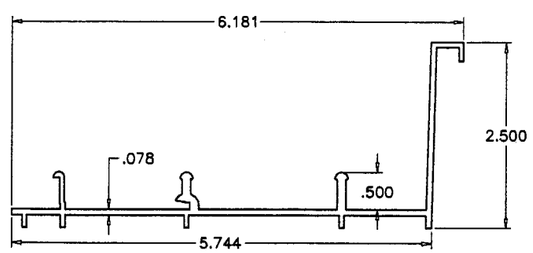

2 2-1/2" FRAME SILL

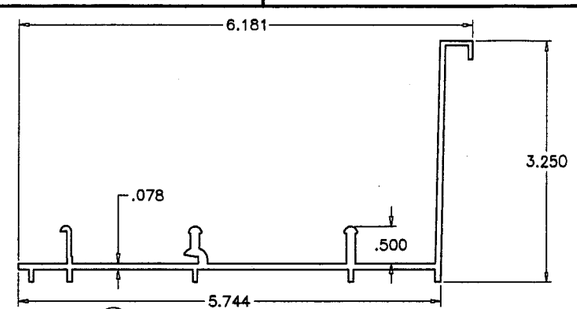

2A 3-1/2" FRAME SILL

Approved as complying with the Florida Building Code
Date 05/20/04
NOA# 04-0302.02
Miami Dade Product Control Division
By

Engr: DR. HUMAYOUN FAROOQ
STRUCTURES
FLA. PE # 16557
C.A.N. 3538

APR 1 2 2004

AL-FAROOQ CORPORATION
ENGINEERS, PLANNERS & PRODUCT DESIGN
1235 SW 87 AVE
MIAMI, FLORIDA 33174
TEL. (305) 264-8100 FAX. (305) 262-6978
COMP-ANL\W04-10KL

SERIES-MPSGD ALUM SLIDING GLASS DOOR (L.M.I.)

KINCO LTD.
280 S.W. 14 th AVE
POMPANO BEACH, FL 33069
TEL. (305) 783-0111

revisions:

no	date	by	description
A	03.19.04		REV. PER BCCO COMMENTS

date: 02-11-04
scale: 1/2" = 1"
dr. by: HAMID
chk. by:

drawing no.
W04-10

sheet 5 of 6

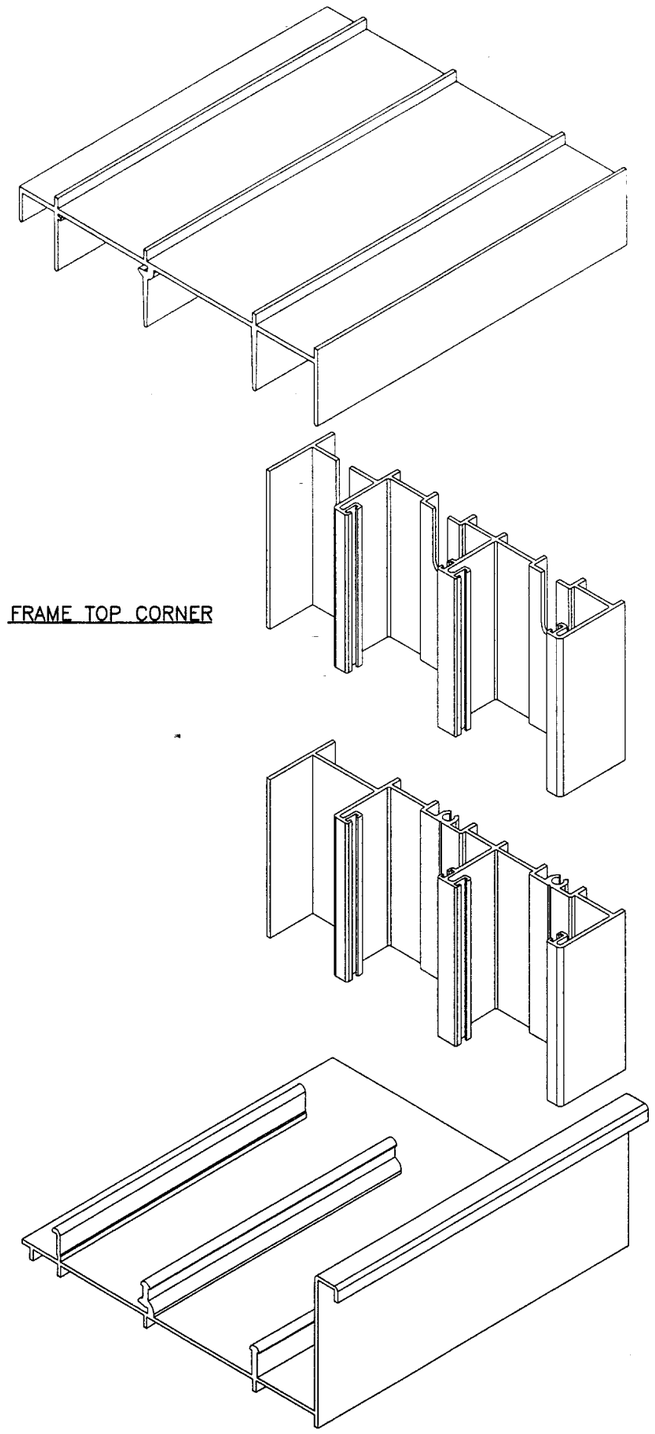

FRAME TOP CORNER

FRAME BOTTOM CORNER

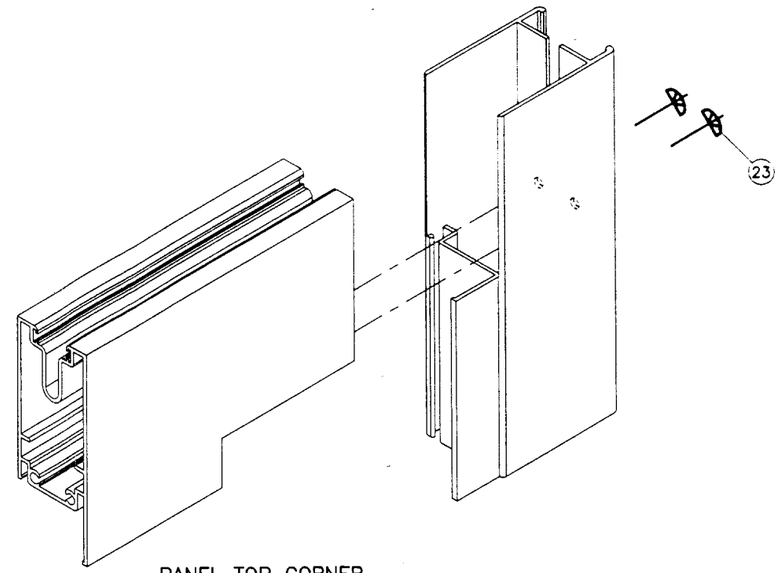

PANEL TOP CORNER

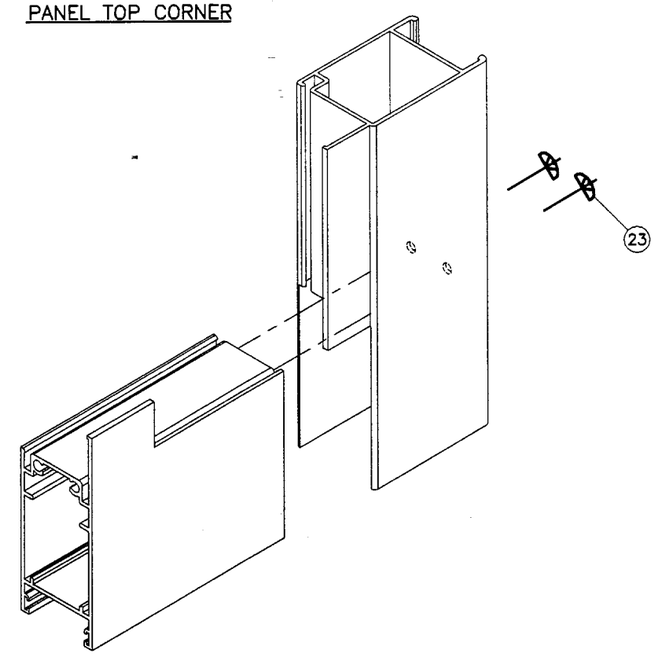

PANEL BOTTOM CORNER

Approved as complying with the
Florida Buiding Code
Date 05/20/04
NOA# 04-0202.02
Miami Dade Product Control
Division
By

Engr: DR. HUMAYOUN FAROOQ
STRUCTURES
FLA. PE # 16557
C.A.N. 3538

APR 12 2004

AL-FAROOQ CORPORATION
ENGINEERS, PLANNERS & PRODUCT DESIGN
1235 SW 87 AVE
MIAMI, FLORIDA 33174
TEL. (305) 264-8100 FAX. (305) 262-6978

COMP-ANL\W04-10KL

SERIES-MPSGD ALUM SLIDING GLASS DOOR (L.M.I.)

KINCO LTD.
280 S.W. 14 th AVE
POMPANO BEACH, FL 33069
TEL. (305) 783-0111

revisions:

no	date	by	description
A	03.19.04		NO CHANGE THIS SHEET

date: 02-11-04
scale: 1/2" = 1"
dr. by: HAMID
chk. by:

drawing no.
W04-10

sheet 6 of 6