MIAMI-DADE

BUILDING CODE COMPLIANCE OFFICE (BCCO)
PRODUCT CONTROL DIVISION

MIAMI-DADE COUNTY, FLORIDA
METRO-DADE FLAGLER BUILDING
140 WEST FLAGLER STREET, SUITE 1603
MIAMI, FLORIDA 33130-1563
(305) 375-2901 FAX (305) 375-2908

NOTICE OF ACCEPTANCE (NOA)

Vistawall Architectural Products
803 Airport Road
Terrell, TX 75160

SCOPE:
This NOA is being issued under the applicable rules and regulations governing the use of construction materials. The documentation submitted has been reviewed by Miami-Dade County Product Control Division and accepted by the Board of Rules and Appeals (BORA) to be used in Miami Dade County and other areas where allowed by the Authority Having Jurisdiction (AHJ).

This NOA shall not be valid after the expiration date stated below. The Miami-Dade County Product Control Division (In Miami Dade County) and/or the AHJ (in areas other than Miami Dade County) reserve the right to have this product or material tested for quality assurance purposes. If this product or material fails to perform in the accepted manner, the manufacturer will incur the expense of such testing and the AHJ may immediately revoke, modify, or suspend the use of such product or material within their jurisdiction. BORA reserves the right to revoke this acceptance, if it is determined by Miami-Dade County Product Control Division that this product or material fails to meet the requirements of the applicable building code.

This product is approved as described herein, and has been designed to comply with the Florida Building Code, including the High Velocity Hurricane Zone.

DESCRIPTION: Series FG-5100 Aluminum Window Wall System

APPROVAL DOCUMENT: Drawing No. **FG5100-02**, titled " Series "FG-5100" Window Wall System", sheets 1 through 16 of 16, prepared by manufacture, dated 1/16/04, signed and sealed by William D. Cook, P.E., bearing the Miami-Dade County Product Control Approval stamp with the Notice of Acceptance number and approval date by the Miami-Dade County Product Control Division.

MISSILE IMPACT RATING: Large and Small Missile Impact

LABELING: Each unit shall bear a permanent label with the manufacturer's name or logo, city, state and following statement: "Miami-Dade County Product Control Approved", unless otherwise noted herein.

RENEWAL of this NOA shall be considered after a renewal application has been filed and there has been no change in the applicable building code negatively affecting the performance of this product.

TERMINATION of this NOA will occur after the expiration date or if there has been a revision or change in the materials, use, and/or manufacture of the product or process. Misuse of this NOA as an endorsement of any product, for sales, advertising or any other purposes shall automatically terminate this NOA. Failure to comply with any section of this NOA shall be cause for termination and removal of NOA.

ADVERTISEMENT: The NOA number preceded by the words Miami-Dade County, Florida, and followed by the expiration date may be displayed in advertising literature. If any portion of the NOA is displayed, then it shall be done in its entirety.

INSPECTION: A copy of this entire NOA shall be provided to the user by the manufacturer or its distributors and shall be available for inspection at the job site at the request of the Building Official.
This NOA consists of this page 1 and evidence page E-1, as well as approval document mentioned above.
The submitted documentation was reviewed by **Herminio F. Gonzalez, P.E., Director, BCCO**

7/28/04

PRODUCT CONTROL ACCEPTED

NOTICE OF ACCEPTANCE: EVIDENCE SUBMITTED

A. DRAWINGS

1. Manufacturers die drawings and sections.
2. Drawing No. **FG5100-02,** titled "Series "FG-5100" Window Wall System", sheets 1 through 16 of 16, prepared by manufacture, dated 1/16/04, signed and sealed by William D. Cook, P.E.

B. TESTS

1. Test reports on 1) Air Infiltration Test, per FBC, TAS 202-94
   2) Uniform Static Air Pressure Test, Loading per FBC,TAS 202-94
   3) Water Resistance Test, per FBC, TAS 202-94
   4) Large Missile Impact Test per FBC, TAS 201-94
   5) Cyclic Wind Pressure Loading per FBC, TAS 203-94

   along with marked-up drawings and installation diagram of aluminum window wall system, prepared by Certified Testing Laboratory Architectural Division, Test Report No. **CTLA- 1177W**, dated 01/06/04, signed and sealed by Ramesh Patel, P.E.

C. CALCULATIONS

1. Anchor Calculations, ASTM-E1300, and structural analysis, prepared by manufacture, dated 1/16/04 with revisions on 04/13/04, signed and sealed by William D. Cook, P.E.

D. QUALITY ASSURANCE

1. Miami Dade Building Code Compliance Office (BCCO).

E. MATERIAL CERTIFICATIONS

1. Notice of Acceptance No. **03-0514.15** issued to "Oldcastle Glass Inc." for "Stormglass Laminated Glass " dated 12/11/03, expiring on 12/11/08.
2. Notice of Acceptance No. **03-0421.02** issued to " Solutia Inc." for "Saflex IIG PVB Interlayer" dated 01/08/04, expiring on 5/21/06.

F. STATEMENTS

1. Statement letter of no financial interest, dated 02/21/04 signed and sealed by William D. Cook, P.E.
2. Statement letter of Code Compliance issued by Bromley- Cook, on 02/21/04 signed and sealed by William D. Cook, P.E.

G. OTHER

1. Letter from consultant stating that the product is in compliance with the Florida Building Code (FBC).

Herminio F. Gonzalez, P.E.
Director, Building Code Compliance Office
NOA No 04-0308.02
Expiration Date: August 19, 2009
Approval Date: August 19, 2004

PRODUCT APPROVAL DRAWINGS
FG-5100 FRAMING SYSTEM WITH MULTIPLE INFILLS
FOR USE IN HURRICANE ZONES
REQUIRING LARGE MISSLE IMPACT PROTECTION

INDEX TO DRAWINGS

SHEET 1 - INDEX TO DRAWINGS AND NOTES

SHEET 2: TYPICAL ELEVATION LIGHT ALUM. MULLION WITH STEEL-LONG SPAN
SHEET 3: TYPICAL ELEVATION HEAVY ALUM. MULLION W/O STEEL-SHORT SPAN
SHEET 4: TYPICAL ELEVATION LIGHT ALUM. MULLION W/O STEEL-SHORT SPAN
SHEET 5: TYPICAL HEAVY ALUM. MULLION W/O STEEL-LONG SPAN
SHEET 6: TYPICAL ELEVATIONS FOR DOORS-INTERMEDIATE JAMB-WITH STEEL (DOORS QUALIFIED ON SEPARATE TEST REPORT)
SHEET 7: GLAZING SCHEDULE

SHEET 8: FRAMING DETAILS
SHEET 9: FRAMING DETAILS
SHEET 10: FRAMING DETAILS
SHEET 11: FRAMING DETAILS
SHEET 12: FRAMING DETAILS

SHEET 13: BILL OF MATERIALS FOR FRAMING AND ACCESSORIES

SHEET 14: PERIMETER FASTENER LOCATIONS FOR ELEVATIONS WITH DOORS (CONCRETE)
SHEET 15: PERIMETER FASTENER LOCATIONS FOR ELEVATIONS WITH DOORS (STEEL)
SHEET 16: PERIMETER FASTENER LOCATIONS FOR ELEVATIONS WITH DOORS (WOOD)

ABBREVIATIONS:
D.L.O.= DAYLIGHT OPENING
D.O.= DOOR OPENING

BROMLEY • COOK ENGINEERING
Structural Engineering Services
2004 N.E. 49th Street
Ft. Lauderdale, FL 33308
954-772-4624

JUL - 1 2004

WILLIAM D. COOK P.E
FLA. P.E. #43904
FLA. S.I. #2008

Approved as complying with the Florida Building Code
Date 08/19/04
NOA# 04-0308.02
Miami-Dade Product Control Division
By

DRAWINGS FOR DADE COUNTY PRODUCT APPROVAL

REV	BY	DATE	DESCRIPTION

MANUAL COMP

VISTAWALL
ARCHITECTURAL PRODUCTS
214 WALT SANDERS MEMORIAL BLVD. NEWNAN, GA. 30265 (770) 252-3090
THE VISTAWALL GROUP
BUTLER MANUFACTURING COMPANY

PROJECT
PRODUCT TEST DRAWINGS
FG-5100 WINDOW WALL SYSTEM
PROTOCOLS: PA201/202/203
GENERAL NOTES AND INFORMATION

PROJECT NO.

DRAWN: WRD
DATE: 1/16/04
SCALE

DRAWING NO.: FG5100_02
SHEET: 1 OF 16

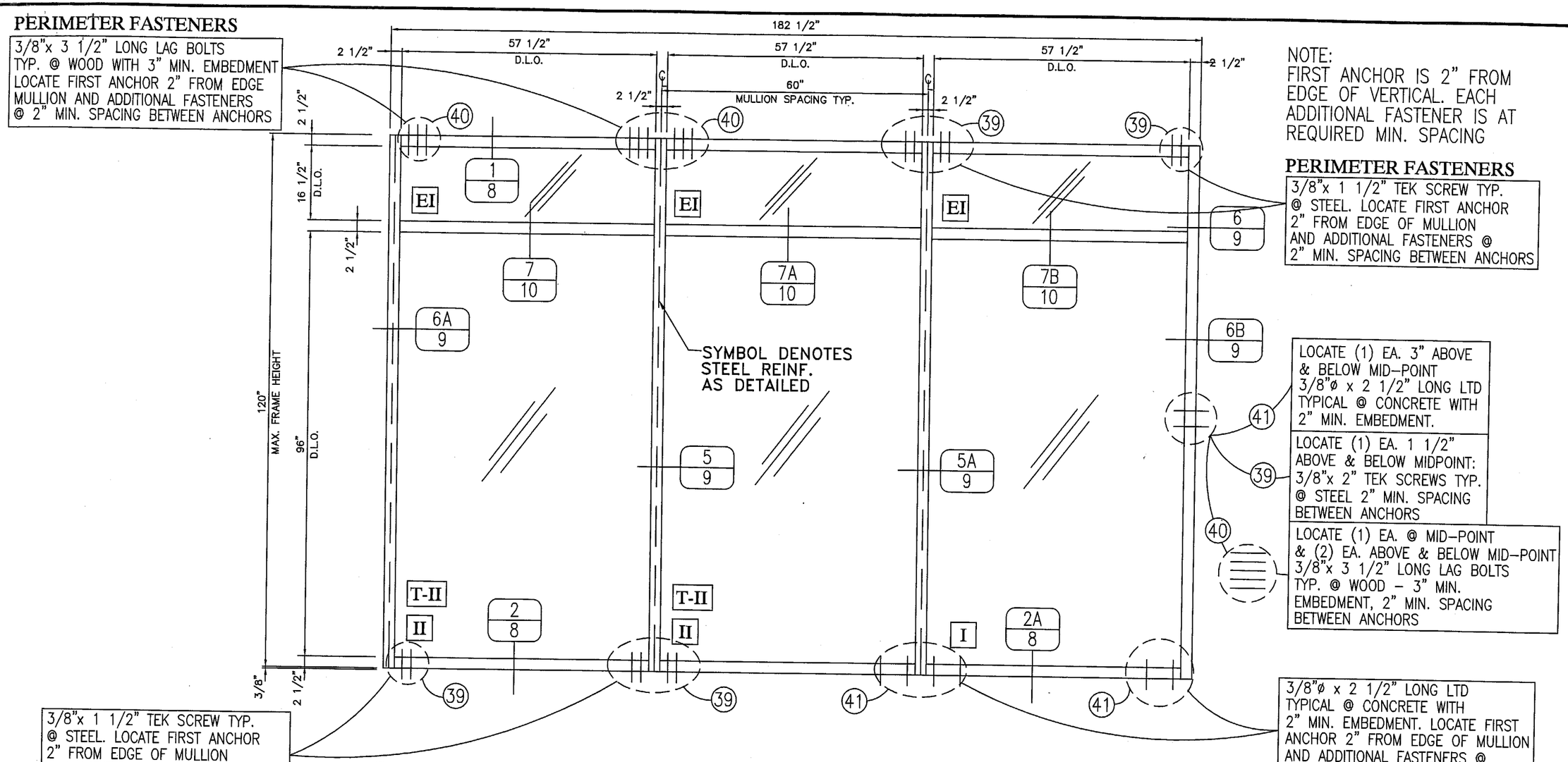

TYPICAL ELEVATION LIGHT ALUM. MULLION WITH STEEL REINFORCEMENT-LONG SPAN-

DESIGN PRESSURE = +70/−80 PSF

WATER TEST @ 15 PSF

AIR TEST @ 6.24 PSF

TYPICAL INSTALLATION INTO:
WOOD/STEEL/CONCRETE FRAME
2500 P.S.I. CONCRETE @ SILL

NOTE 1: GLASS SIZE D.L.O. +1 1/8"

NOTE 2: ALTERNATE WALL JAMB 6A/9 IS OPTIONAL WITHOUT BEING ATTACHED TO SUBSTRATE

NOTE 3: HORIZONTAL MULLION DETAIL 7/10, OR 7A/10 IS OPTIONAL IN ANY BAY

NOTE 4: FG-5183 TRANSITION GLAZING ADAPTER IS OPTIONAL IN ANY BAY

BROMLEY • COOK ENGINEERING
Structural Engineering Services
2004 N.E. 49th Street
Ft. Lauderdale, FL 33308
954-772-4624

JUL - 1 2004

WILLIAM D. COOK P.E
FLA. P.E. #43904
FLA. S.I. #2008

Approved as complying with the Florida Buiding Code
Date 08/19/04
NOA# 04-0308.02
Miami-Dade Product Control Division
By

DRAWINGS FOR DADE COUNTY PRODUCT APPROVAL

REV	BY	DATE	DESCRIPTION

MANUAL COMP

VISTAWALL ARCHITECTURAL PRODUCTS
803 AIRPORT RD. TERRELL TX 75160 (972) 551-6100
THE VISTAWALL GROUP
BUTLER MANUFACTURING COMPANY

PROJECT
PRODUCT APPROVAL DRAWINGS
FG-5100 WINDOW WALL SYSTEM
PROTOCOLS: PA201/202/203
FRAMING ELEVATIONS

PROJECT NO.

DRAWN WRD | DATE 1/16/04

SCALE 1/2"=1'-0"

DRAWING NO. FG5100_02

SHEET 2 OF 16

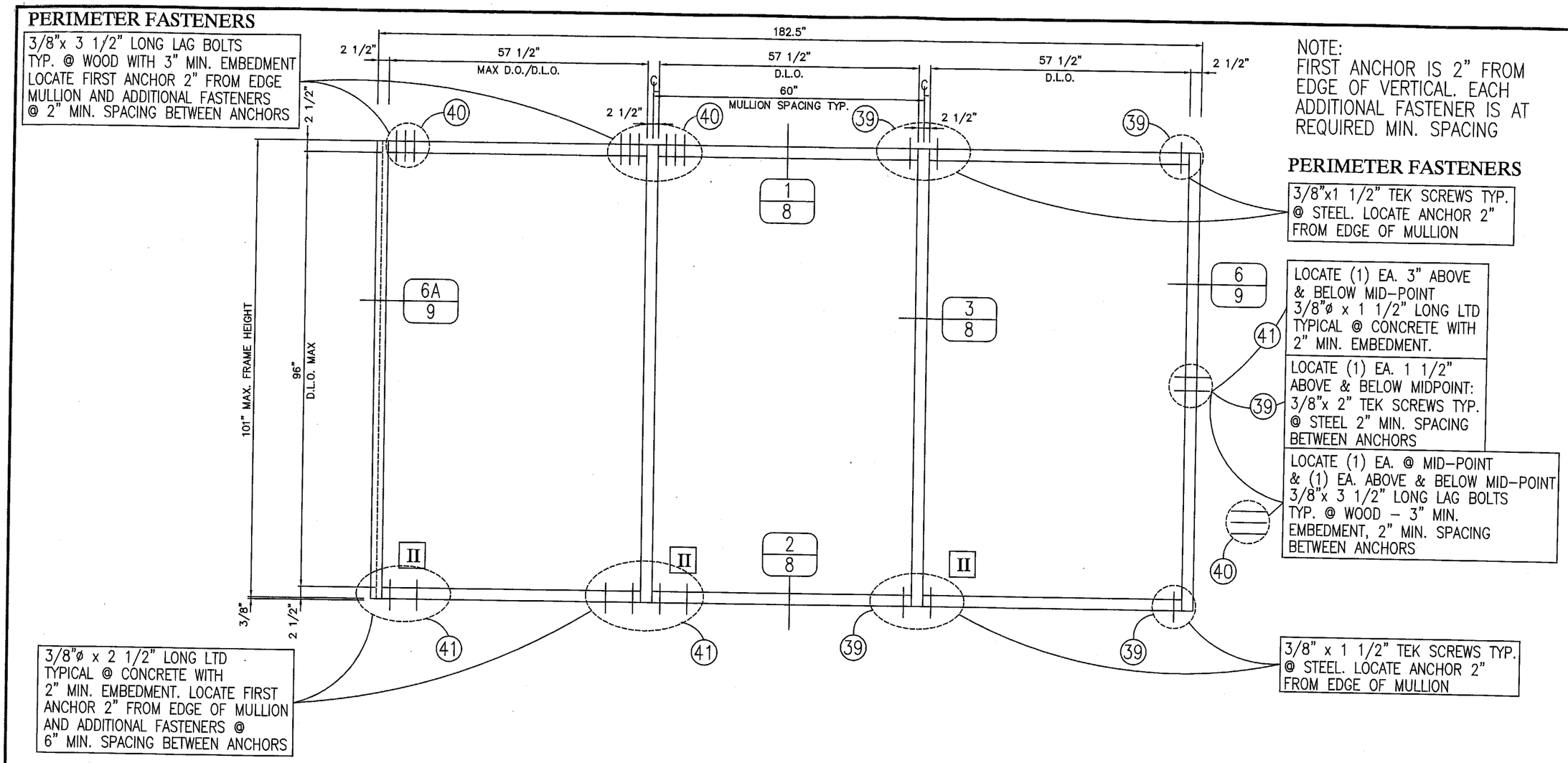

TYPICAL ELEVATION HEAVY ALUM. MULLION WITHOUT STEEL -SHORT SPAN-

DESIGN PRESSURE = +70/−80 PSF

TYPICAL INSTALLATION INTO:
WOOD/STEEL/CONCRETE FRAME
2500 P.S.I. CONCRETE @ SILL

NOTE 1: GLASS SIZE D.L.O. +1 1/8"

NOTE 2: ALTERNATE WALL JAMB (6A/9) IS OPTIONAL WITHOUT BEING ATTACHED TO SUBSTRATE

NOTE 3: HORIZONTAL MULLION (7/10 OR 7A/10) IS OPTIONAL IN ANY BAY.

NOTE 4: FG-5183 TRANSITION GLAZING ADAPTER IS OPTIONAL IN ANY BAY

BROMLEY • COOK ENGINEERING
Structural Engineering Services
2004 N.E. 49th Street
Ft. Lauderdale, FL 33308
954-772-4624

JUL - 1 2004

WILLIAM D. COOK P.
FLA. P.E. #43904
FLA. S.I. #2008

Approved as complying with the Florida Buiding Code
Date 08/19/04
NOA# 04-0308.02
Miami-Dade Product Control Division
By

DRAWINGS FOR DADE COUNTY PRODUCT APPROVAL

REV	BY	DATE	DESCRIPTION

MANUAL COMP

VISTAWALL ARCHITECTURAL PRODUCTS
803 AIRPORT RD. TERRELL TX 75160 (972) 551-6100
THE VISTAWALL GROUP
BUTLER MANUFACTURING COMPANY

PROJECT
PRODUCT APPROVAL DRAWINGS
FG-5100 WINDOW WALL SYSTEMS
PROTOCOLS: PA 201/202/203
FRAMING ELEVATIONS

PROJECT NO.

DRAWN WRD | DATE 1/16/04

SCALE 1/2"=1'-0"

DRAWING NO. FG5100_02

SHEET 3 OF 16

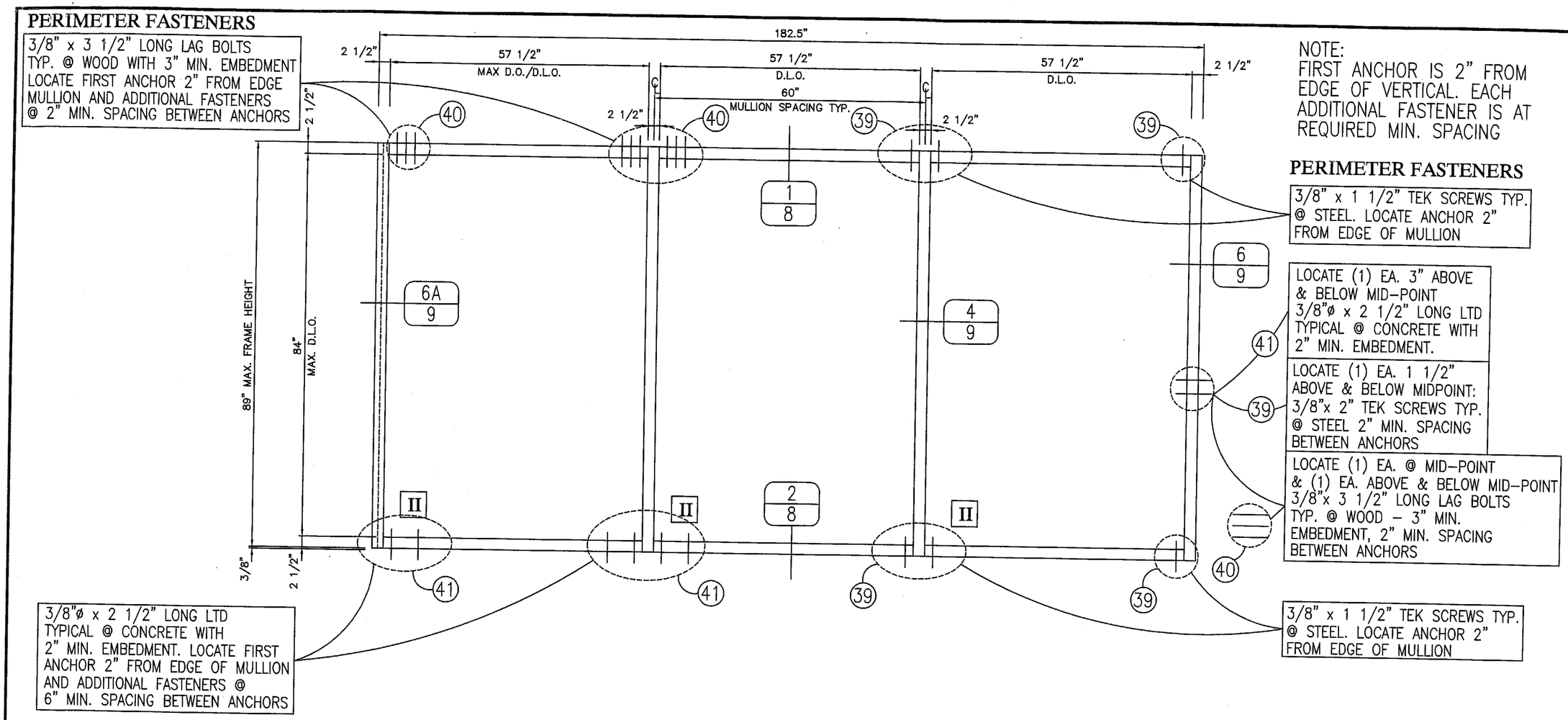

TYPICAL ELEVATION LIGHT ALUM. MULLION WITHOUT STEEL -SHORT SPAN-

DESIGN PRESSURE = +60/−65 PSF

TYPICAL INSTALLATION INTO:
WOOD/STEEL/CONCRETE FRAME
2500 P.S.I. CONCRETE @ SILL

NOTE 1: GLASS SIZE D.L.O. +1 1/8"

NOTE 2: ALTERNATE WALL JAMB (6A/9) IS OPTIONAL WITHOUT BEING ATTACHED TO SUBSTRATE

NOTE 3: HORIZONTAL MULLION (7/10 OR 7A/10) IS OPTIONAL IN ANY BAY.

NOTE 4: FG-5183 TRANSITION GLAZING ADAPTER IS OPTIONAL IN ANY BAY

BROMLEY • COOK ENGINEERING
Structural Engineering Services
2004 N.E. 49th Street
Ft. Lauderdale, FL 33308
954-772-4624

JUL - 1 2004

WILLIAM D. COOK P.E
FLA. P.E. #43904
FLA S.I. #2008

Approved as complying with the Florida Buiding Code
Date 08/19/04
NOA# 04-0308.02
Miami Dade Product Control Division
By

DRAWINGS FOR DADE COUNTY PRODUCT APPROVAL

REV	BY	DATE	DESCRIPTION

MANUAL COMP

VISTAWALL ARCHITECTURAL PRODUCTS
803 AIRPORT RD. TERRELL TX 75160 (972) 551-6100
THE VISTAWALL GROUP
BUTLER MANUFACTURING COMPANY

PROJECT
PRODUCT APPROVAL DRAWINGS
FG-5100 WINDOW WALL SYSTEMS
PROTOCOLS: PA 201/202/203
FRAMING ELEVATIONS

PROJECT NO.

DRAWN	DATE
WRD	1/16/04

SCALE 1/2"=1'-0"

DRAWING NO. FG5100_02

SHEET 4 OF 16

PERIMETER FASTENERS

3/8"x 3 1/2" LONG LAG BOLTS
TYP. @ WOOD WITH 3" MIN. EMBEDMENT
LOCATE FIRST ANCHOR 2" FROM EDGE
MULLION AND ADDITIONAL FASTENERS
@ 2" MIN. SPACING BETWEEN ANCHORS

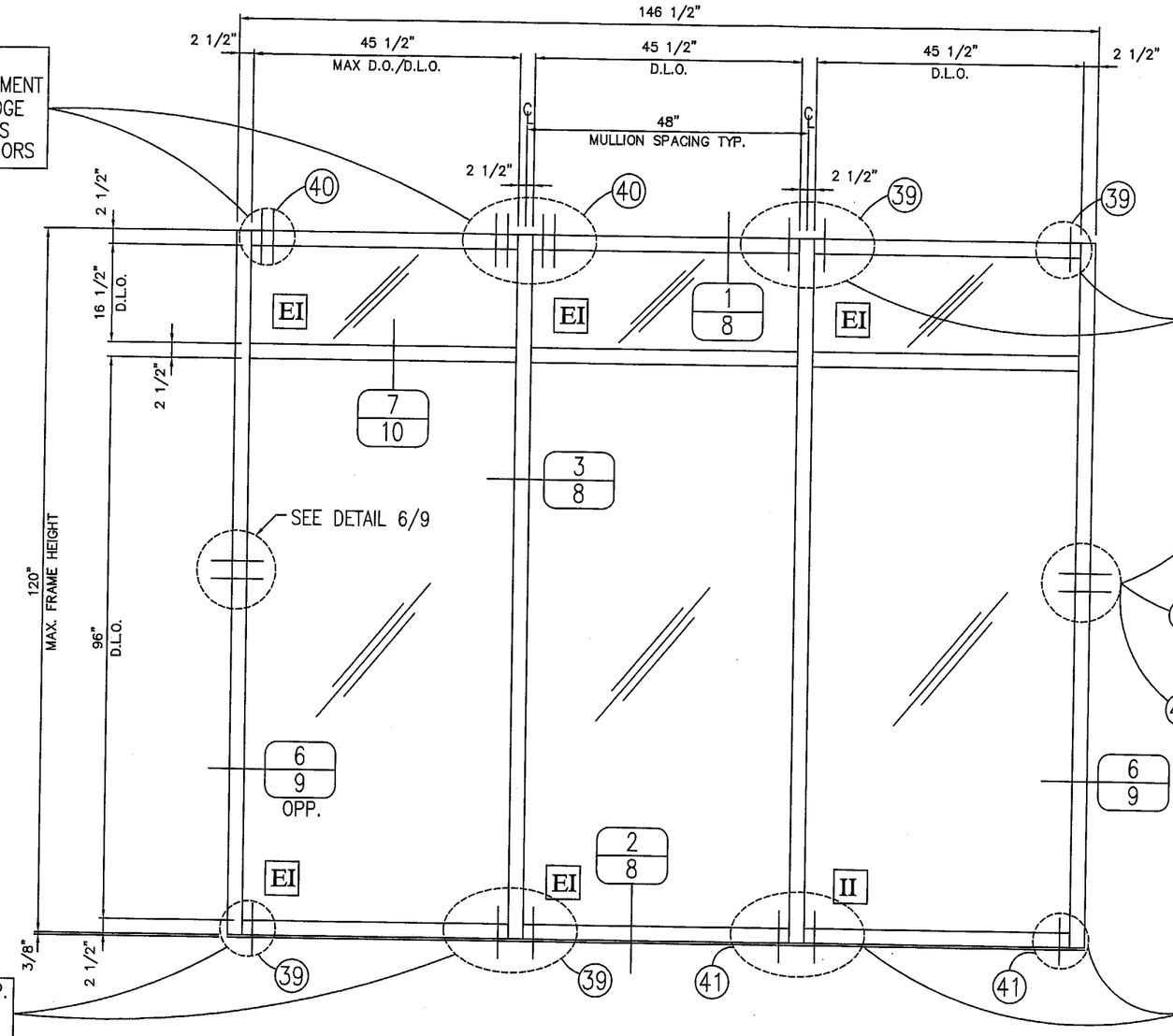

NOTE:
FIRST ANCHOR IS 2" FROM EDGE OF VERTICAL. EACH ADDITIONAL FASTENER IS AT REQUIRED MIN. SPACING

PERIMETER FASTENERS

3/8" x 1 1/2" TEK SCREW TYP.
@ STEEL. ANCHOR 2" FROM
EDGE OF MULLION

LOCATE (1) EA. 3" ABOVE & BELOW MID-POINT 3/8"ø x 2 1/2" LONG LTD TYPICAL @ CONCRETE WITH 2" MIN. EMBEDMENT. (41)

LOCATE (1) EA. 1" ABOVE & BELOW MIDPOINT: 3/8" x 2" TEK SCREWS TYP. @ STEEL (39)

LOCATE (1) EA. 1" ABOVE & BELOW MID-POINT 3/8" x 3 1/2" LONG LAG BOLTS TYP. @ WOOD – 3" MIN. EMBEDMENT (40)

3/8" x 1 1/2" TEK SCREW TYP.
@ STEEL. ANCHOR
2" FROM EDGE OF MULLION

3/8"ø x 2 1/2" LONG LTD
TYPICAL @ CONCRETE WITH
2" MIN. EMBEDMENT. LOCATE
ANCHOR 2" FROM EDGE OF MULLION

TYPICAL HEAVY MULLION WITHOUT STEEL -LONG SPAN-

DESIGN PRESSURE = +60/–65 PSF

TYPICAL INSTALLATION INTO:
WOOD/STEEL/CONCRETE FRAME
2500 P.S.I. CONCRETE @ SILL

NOTE 1: GLASS SIZE D.L.O. +1 1/8"
NOTE 2: HORIZONTAL MULLION (DETAIL 7A/10) IS OPTIONAL IN ANY BAY.
NOTE 3: FG–5183 TRANSITION GLAZING ADAPTER IS OPTIONAL IN ANY BAY

BROMLEY • COOK ENGINEERING
Structural Engineering Services
2004 N.E. 49th Street
Ft. Lauderdale, FL 33308
954-772-4624

JUL - 1 2004

WILLIAM D. COOK P.E
FLA. P.E. #43904
FLA S.I. #2008

Approved as complying with the Florida Buiding Code
Date 08/19/04
NOA# 04-0308.02
Miami Dade Product Control Division
By

DRAWINGS FOR DADE COUNTY PRODUCT APPROVAL

REV	BY	DATE	DESCRIPTION

MANUAL COMP

VISTAWALL ARCHITECTURAL PRODUCTS
803 AIRPORT RD. TERRELL TX 75160 (972) 551-6100
THE VISTAWALL GROUP
BUTLER MANUFACTURING COMPANY

PRODUCT APPROVAL DRAWINGS
FG-5100 WINDOW WALL SYSTEM
PROTOCALS: PA 201/202/203

FRAMING ELEVATIONS

PROJECT

PROJECT NO.

DRAWN WRD | DATE 1/16/04

SCALE 1/2"=1'–0"

DRAWING NO. FG5100_02

SHEET 5 OF 16

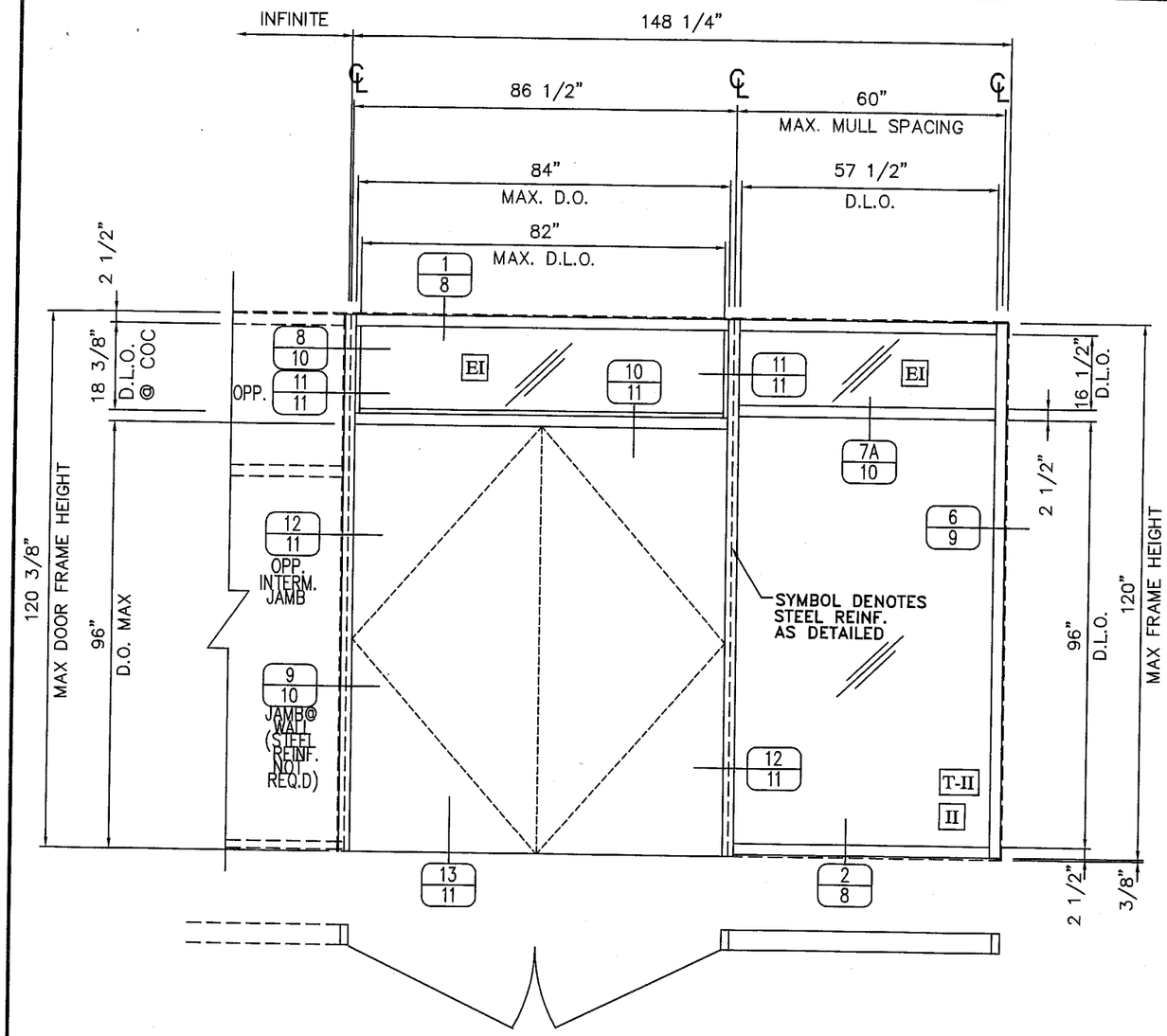

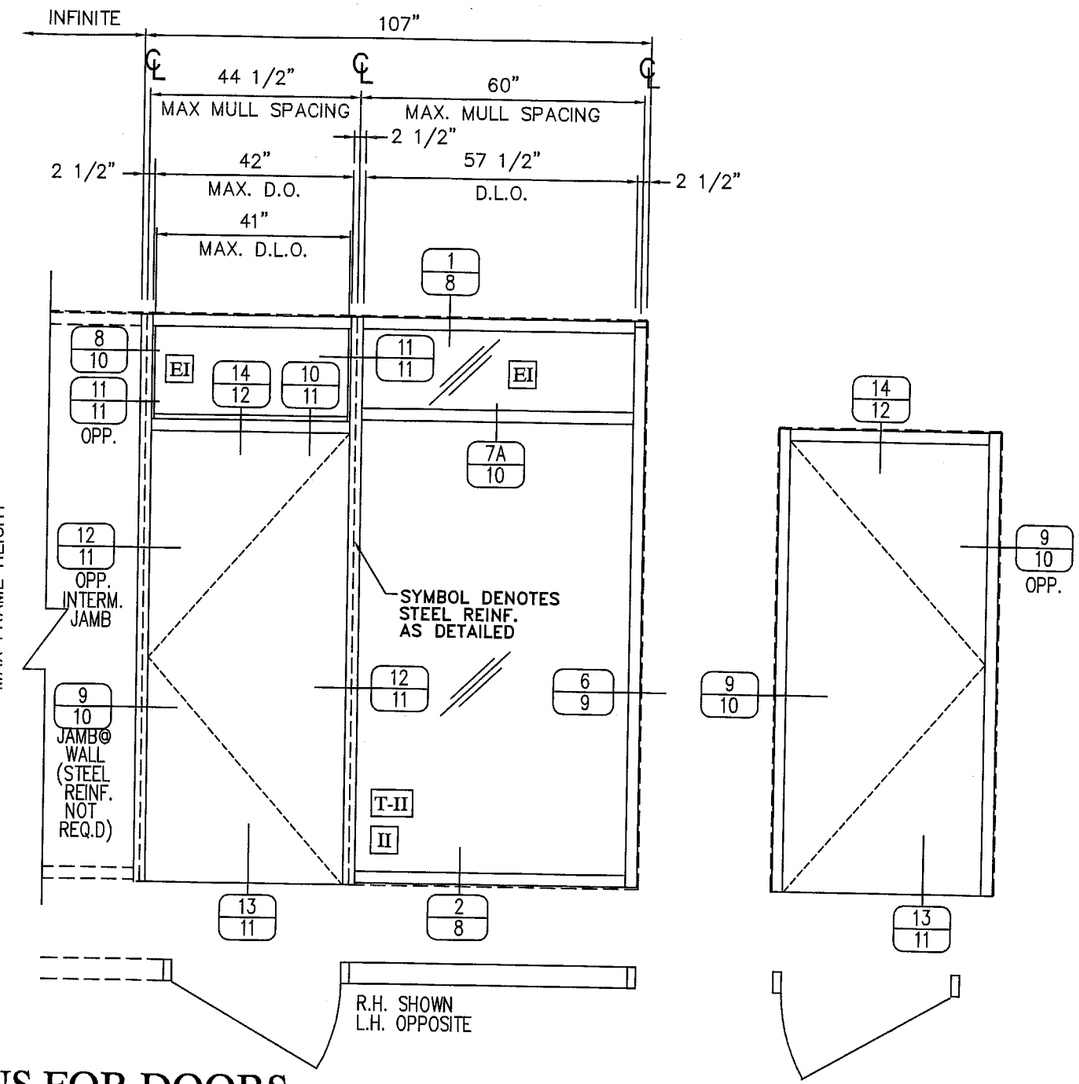

TYPICAL ELEVATIONS FOR DOORS
-LONG SPAN-

DESIGN PRESSURE = +70/−80 PSF

NOTE 1: GLASS SIZE D.L.O. +1 1/8"
NOTE 2: SEE SHEETS 14,15 AND 16 FOR PERIMETER FASTENER SCHEDULE AND LOCATIONS
NOTE 3: HORIZONTAL MULLION (DETAIL 7/10) IS OPTIONAL IN ANY BAY.
NOTE 4: FG−5183 TRANSITION GLAZING ADAPTER IS OPTIONAL IN ANY BAY
NOTE 5: DOORS ARE SHOWN ON SEPERATE SUBMISSION

BROMLEY • COOK ENGINEERING
Structural Engineering Services
2004 N.E. 49th Street
Ft. Lauderdale, FL 33308
954-772-4624

JUL - 1 2004

WILLIAM D. COOK P.E
FLA. P.E. #43904
FLA. S.I. #2008

Approved as complying with the Florida Building Code
Date 08/19/04
NOA# 04-0308.02
Miami Dade Product Control Division
By

DRAWINGS FOR DADE COUNTY PRODUCT APPROVAL

REV	BY	DATE	DESCRIPTION

MANUAL COMP

VISTAWALL ARCHITECTURAL PRODUCTS
214 WALT SANDERS MEMORIAL BLVD. NEWNAN, GA. 30265 (770) 252-3000
THE VISTAWALL GROUP
BUTLER MANUFACTURING COMPANY

PROJECT
PRODUCT APPROVAL DRAWINGS
FG-5100 WINDOW WALL SYSTEM
PROTOCOLS: PA201,202,203
FRAMING AND DOOR ELEVATIONS

PROJECT NO. DADE CO
DRAWN WRD
DATE 1/16/04
SCALE 3/8"=1'−0"
DRAWING NO. FG5100_02
SHEET 6 OF 16

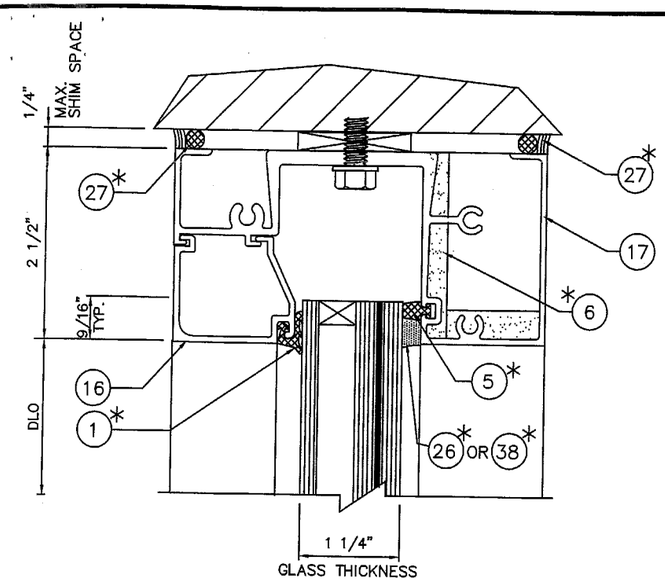

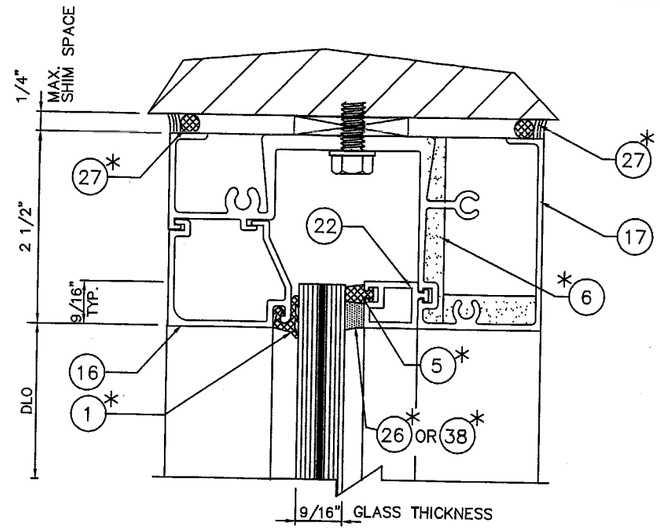

GLAZING SCHEDULE

GLASS MARK SYMBOL	GLASS TYPE	MANUFACTURER	MAXIMUM D.L.O. SIZE	MAXIMUM SQUARE FEET
II	1 1/4" STORMGLASS INSULATED--1/4" H.S.-1/2" AIR SPACE-1/4" H.S.- .075 STORMGLASS INTERLAYER - 1/4" H.S.	OLDCASTLE	57 1/2" X 96"	38.3
EI	1 1/4" .090 PVB INSULATED 1/4" H.S.- 1/2" AIRSPACE-1/4" H.S.- .090 SAFLEX PVB 1/4 H.S.	OLDCASTLE	45 1/2" X 96"	30.3
T-II	1 1/4" STORMGLASS INSULATED--1/4" TEMP-1/2" AIR SPACE-1/4" H.S.- .075 STORMGLASS INTERLAYER - 1/4" H.S.	OLDCASTLE	57 1/2" X 96"	38.3
I	9/16" STORMGLASS CONSISTING OF TWO 1/4" H.S GLASS AND A 0.075" OLDCASTLE INTERLAYER	OLDCASTLE	57 1/2" X 96"	38.3

OPTIONS AND LIMITATIONS

DESIGN PRESSURE P.S.F.	INTERM VERTICAL MULLION	WALL JAMB MULLION	MAX. MULLION LENGTH	MAX. SPAN CL TO CL	QUALIFIED GLASS TYPE
+70/-80	FG-5175 W/O STEEL	FG-5174 W/O STEEL	101"	60"	II
+60/-65	FG-5173 W/O STEEL	FG-5174 W/O STEEL	89"	60"	II
+60/-65	FG-5175 W/O STEEL	FG-5174 W/O STEEL	120"	48"	EI OR II
+70/-80	FG-5173 WITH STEEL	FG-5174 W/O STEEL	120"	60"	T-II I OR II
+70/-80	FG-5173 WITH STEEL	FG-5173 WITH STEEL	120"	60"	T-II I OR II

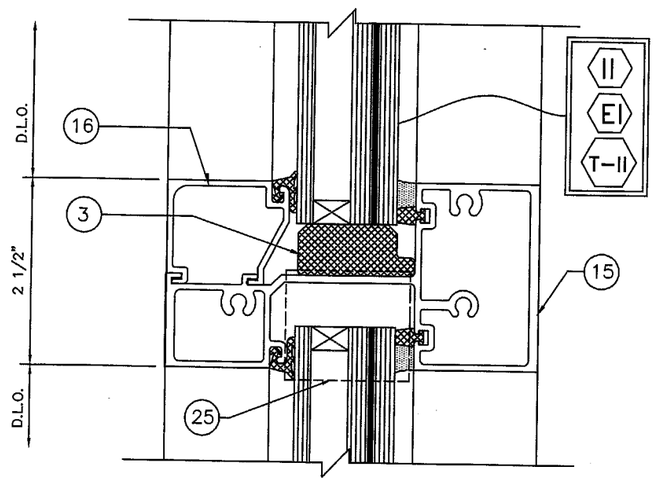

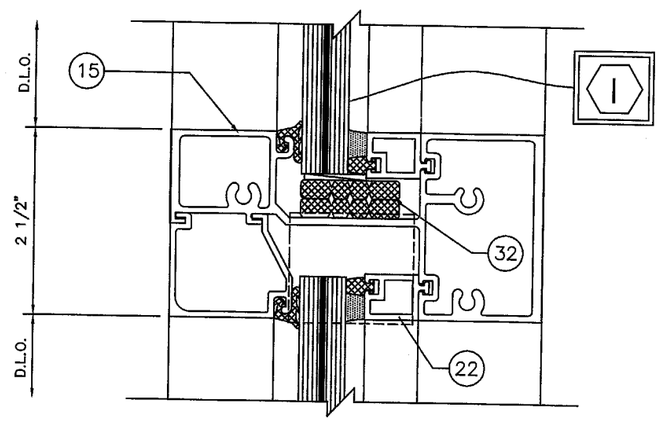

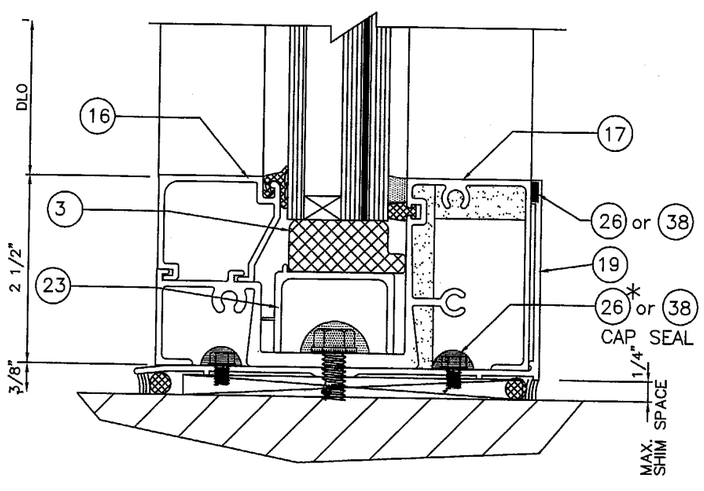

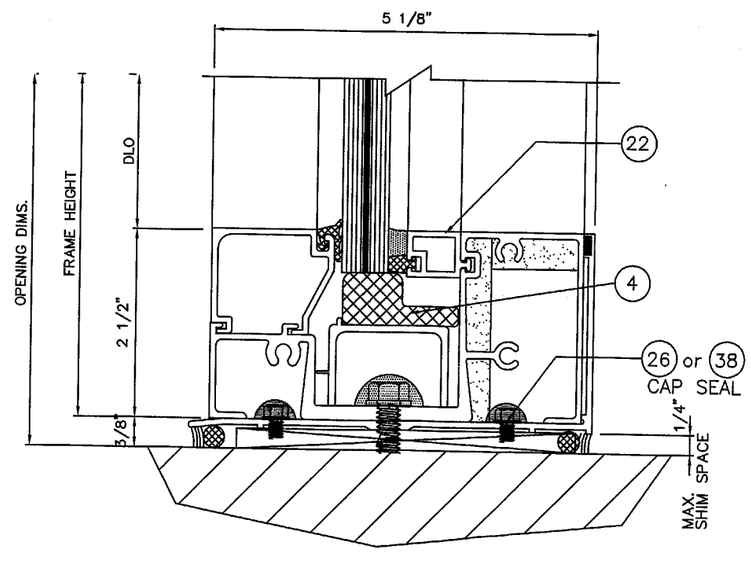

TYPICAL GLASS SIZE= DLO +1 1/8"

7* TYPICAL AT ALL SPLINES	1* TYPICAL EXTERIOR GASKET
26* or 38* TYPICAL INTERIOR SEALANT	6* TYP. @ ALL JOINT INTERSECTIONS
27* TYPICAL EXTERIOR & INTERIOR SEALANT	5* TYPICAL INTERIOR SPACER GASKET

BROMLEY • COOK ENGINEERING
Structural Engineering Services
2004 N.E. 49th Street
Ft. Lauderdale, FL 33308
954-772-4624

JUL - 1 2004

WILLIAM D. COOK P.E
FLA. P.E. #43904
FLA. S.I. #2008

Approved as complying with the Florida Building Code
Date 08/19/04
NOA# 04-0308.02
Miami-Dade Product Control Division
By

DRAWINGS FOR DADE COUNTY PRODUCT APPROVAL

REV	BY	DATE	DESCRIPTION

MANUAL COMP

VISTAWALL ARCHITECTURAL PRODUCTS
803 AIRPORT RD. TERRELL TX 75160 (972) 551-6100
THE VISTAWALL GROUP
BUTLER MANUFACTURING COMPANY

PROJECT
PRODUCT APPROVAL DRAWINGS
FG-5100 WINDOW WALL SYSTEM
PROTOCOLS: PA 201/202/203

GLAZING OPTIONS

PROJECT NO.

DRAWN WRD | DATE 1/16/04

SCALE 6"=1'-0"

DRAWING NO. FG5100_02

SHEET 7 OF 16

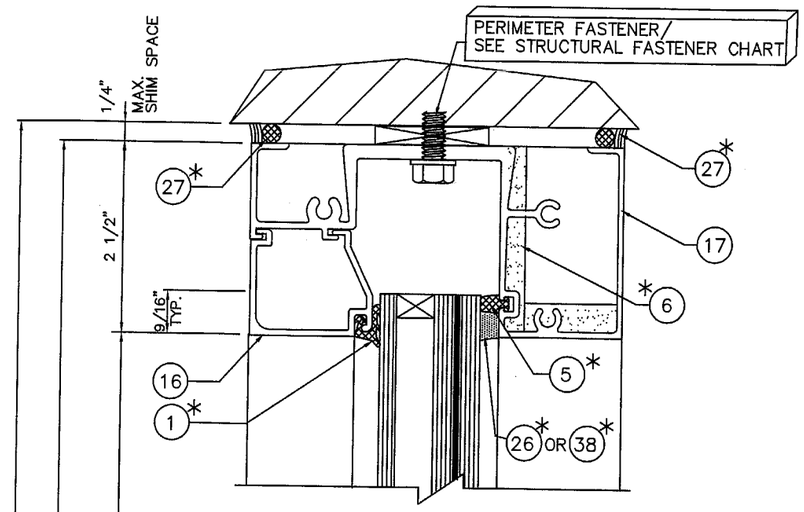

1
HEAD

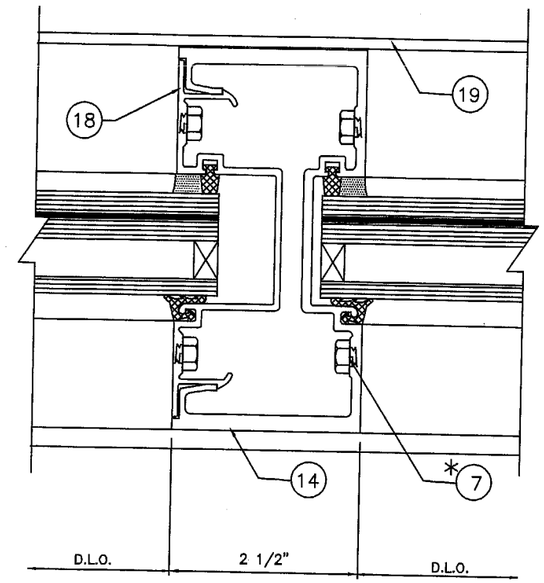

3
HEAVY INTERM. VERTICAL

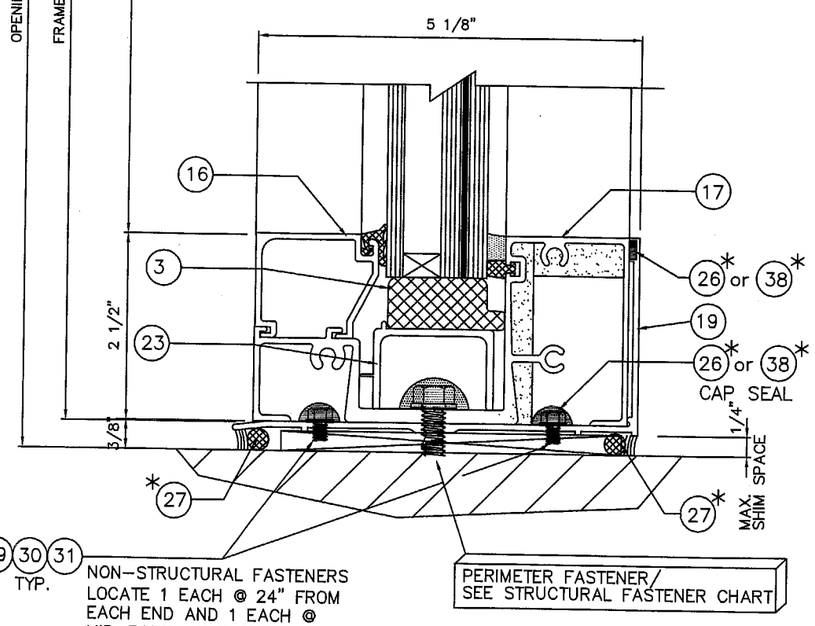

2
SILL

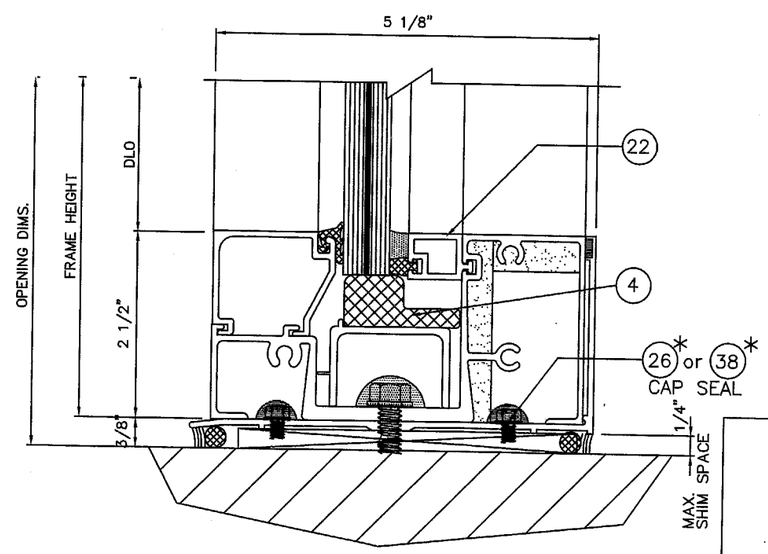

2A
SILL

7* TYPICAL AT ALL SPLINES	1* TYPICAL EXTERIOR GASKET
26* or 38* TYPICAL INTERIOR SEALANT	6* TYP. @ ALL JOINT INTERSECTIONS
27* TYPICAL EXTERIOR & INTERIOR SEALANT	5* TYPICAL INTERIOR SPACER GASKET

BROMLEY • COOK ENGINEERING
Structural Engineering Services
2004 N.E. 49th Street
Ft. Lauderdale, FL 33308
954-772-4624

JUL - 1 2004

WILLIAM D. COOK P.E
FLA. P.E. #43904
FLA. S.I. #2008

Approved as complying with the Florida Buiding Code
Date 08/19/04
NOA# 04-0308.02
Miami Dade Product Control Division
By

DRAWINGS FOR DADE COUNTY PRODUCT APPROVAL

REV	BY	DATE	DESCRIPTION

MANUAL COMP

VISTAWALL ARCHITECTURAL PRODUCTS
803 AIRPORT RD. TERRELL TX 75160 (972) 551-6100
THE VISTAWALL GROUP
BUTLER MANUFACTURING COMPANY

PROJECT
PRODUCT APPROVAL DRAWINGS
FG-5100 WINDOW WALL SYSTEM
PROTOCOLS: PA 201/202/203

FRAMING DETAILS

PROJECT NO.

DRAWN	DATE
WRD	1/16/04

SCALE 6"=1'-0"

DRAWING NO. FG5100_02

SHEET 8 OF 16

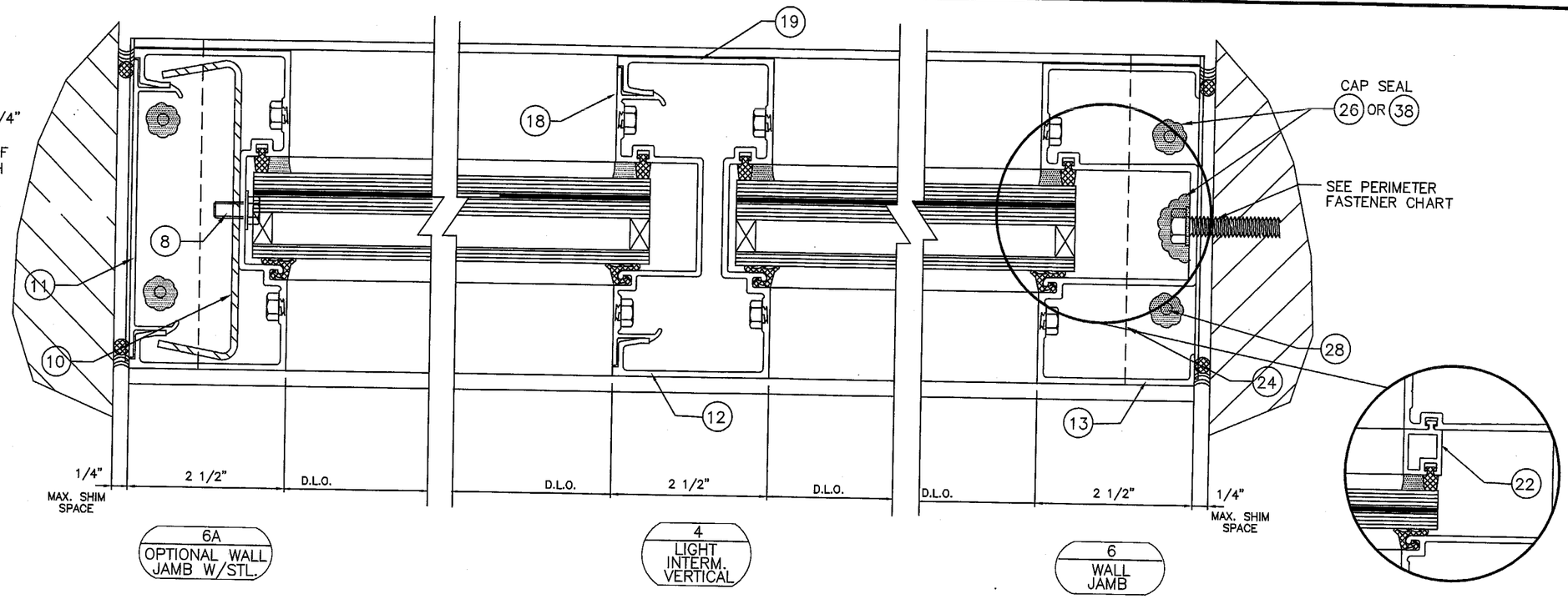

6A
OPTIONAL WALL JAMB W/STL.

4
LIGHT INTERM. VERTICAL

6
WALL JAMB

6B
WALL JAMB

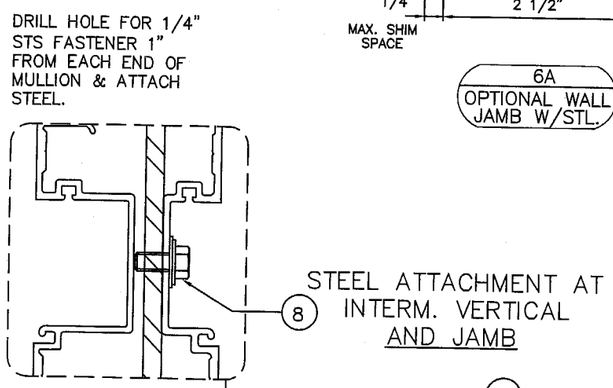

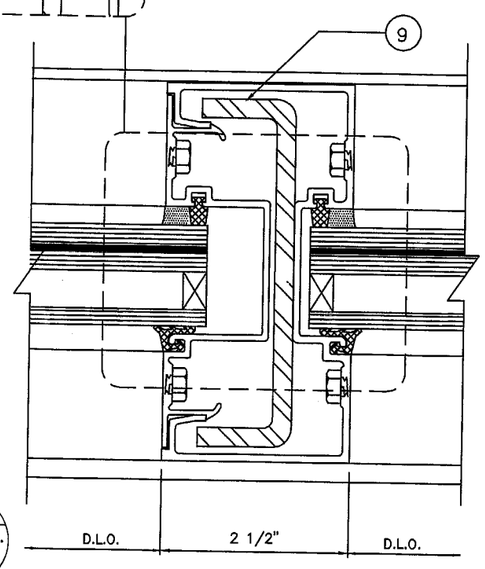

5
LIGHT INTERM. VERTICAL STEEL

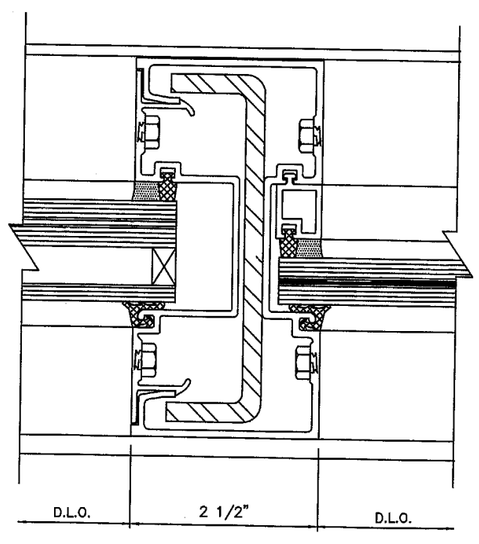

5A
LIGHT INTERM. VERTICAL STEEL

7 * TYPICAL AT ALL SPLINES	1 * TYPICAL EXTERIOR GASKET
26 * or 38 * TYPICAL INTERIOR SEALANT	6 * TYP. @ ALL JOINT INTERSECTIONS
27 * TYPICAL EXTERIOR & INTERIOR SEALANT	5 * TYPICAL INTERIOR SPACER GASKET

BROMLEY • COOK ENGINEERING
Structural Engineering Services
2004 N.E. 49th Street
Ft. Lauderdale, FL 33308
954-772-4624

JUL - 1 2004

WILLIAM D. COOK P.E
FLA. P.E. #43904
FLA. S.I. #2008

Approved as complying with the Florida Building Code
Date 08/19/04
NOA# 04-0308.02
Miami Dade Product Control Division
By

DRAWINGS FOR DADE COUNTY PRODUCT APPROVAL

REV	BY	DATE	DESCRIPTION

MANUAL COMP

VISTAWALL ARCHITECTURAL PRODUCTS
803 AIRPORT RD. TERRELL TX 75160 (972) 551-6100
THE VISTAWALL GROUP
BUTLER MANUFACTURING COMPANY

PROJECT
PRODUCT APPROVAL DRAWINGS
FG-5100 WINDOW WALL SYSTEMS
PROTOCOLS: PA 201/202/203

FRAMING DETAILS

PROJECT NO.

DRAWN WRD | DATE 1/16/04

SCALE 6"=1'-0"

DRAWING NO. FG5100_02

SHEET 9 OF 16

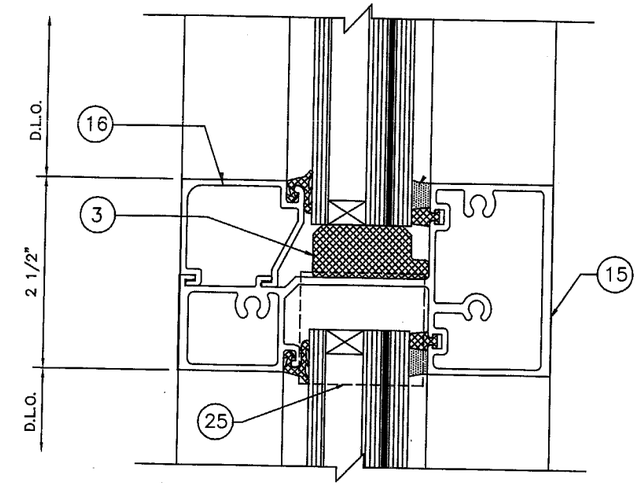

7
HORIZONTAL MULLION

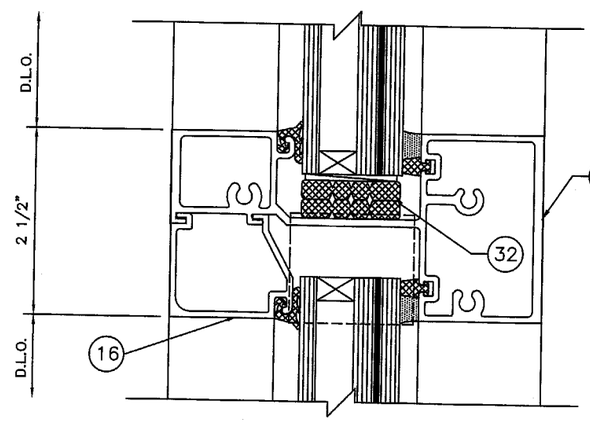

7A
HORIZONTAL MULLION REVERSED

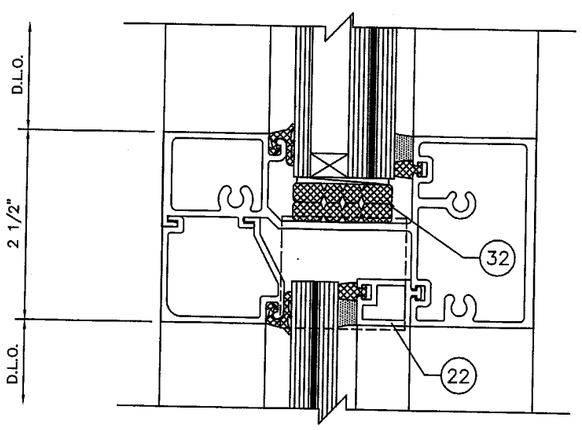

7B
HORIZONTAL MULLION REVERSED

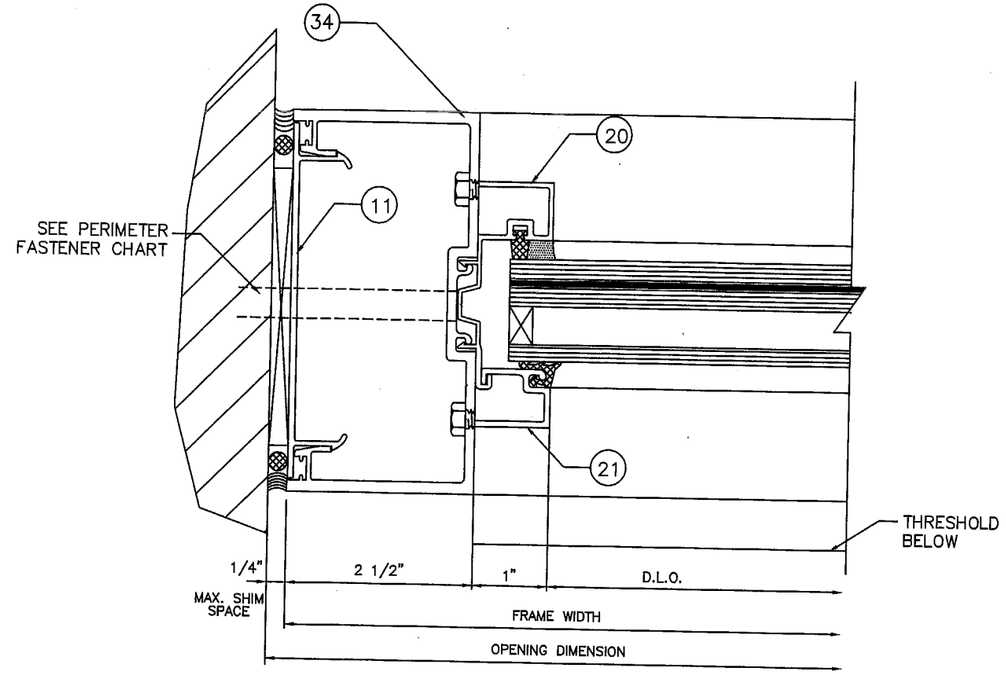

8
JAMB TO WALL @ TRANSOM

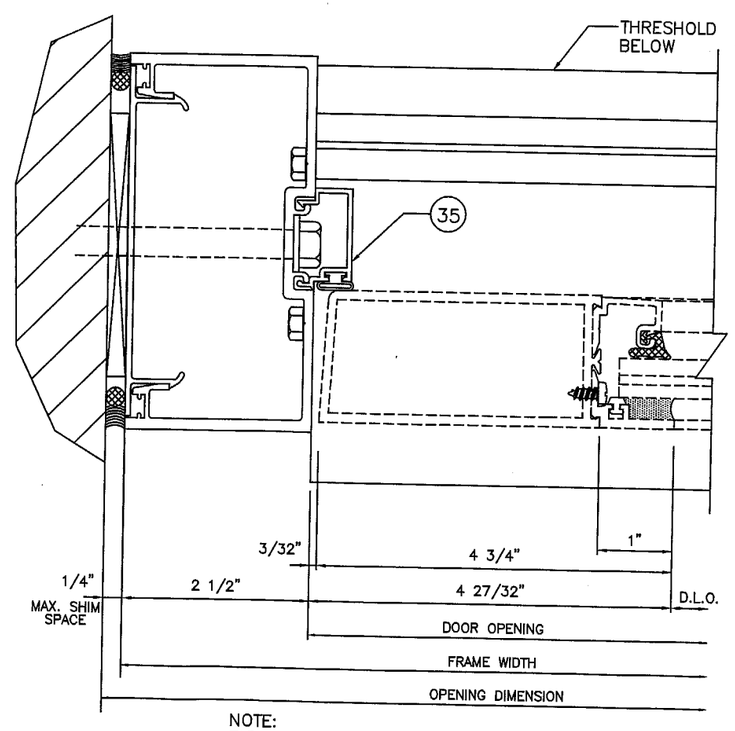

9
JAMB AT WALL

NOTE:
TYPICAL FOR BUTT HINGES OR OFFSET PIVOTS

1 *TYPICAL EXTERIOR GASKET

6 *TYP. @ ALL JOINT INTERSECTIONS

5 *TYPICAL INTERIOR SPACER GASKET

7 *TYPICAL AT ALL SPLINES

26 *or 38 *TYPICAL INTERIOR SEALANT

27 *TYPICAL EXTERIOR & INTERIOR SEALANT

BROMLEY • COOK ENGINEERING
Structural Engineering Services
2004 N.E. 49th Street
Ft. Lauderdale, FL 33308
954-772-4624

JUL - 1 2004

WILLIAM D. COOK P.E
FLA. P.E. #43904
FLA. S.I. #2008

Approved as complying with the Florida Building Code
Date 08/19/04
NOA# 04.0308.02
Miami Dade Product Control Division
By

DRAWINGS FOR DADE COUNTY PRODUCT APPROVAL

REV	BY	DATE	DESCRIPTION

MANUAL COMP

VISTAWALL ARCHITECTURAL PRODUCTS
803 AIRPORT RD. TERRELL TX 75160 (972) 551-6100
THE VISTAWALL GROUP
BUTLER MANUFACTURING COMPANY

PROJECT
PRODUCT APPROVAL DRAWINGS
FG-5100 WINDOW WALL SYSTEM
PROTOCOLS: PA201/202/203

FRAMING DETAILS

PROJECT NO.

DRAWN WRD | DATE 1/16/04

SCALE 6"=1'-0"

DRAWING NO. FG5100_02

SHEET 10 OF 16

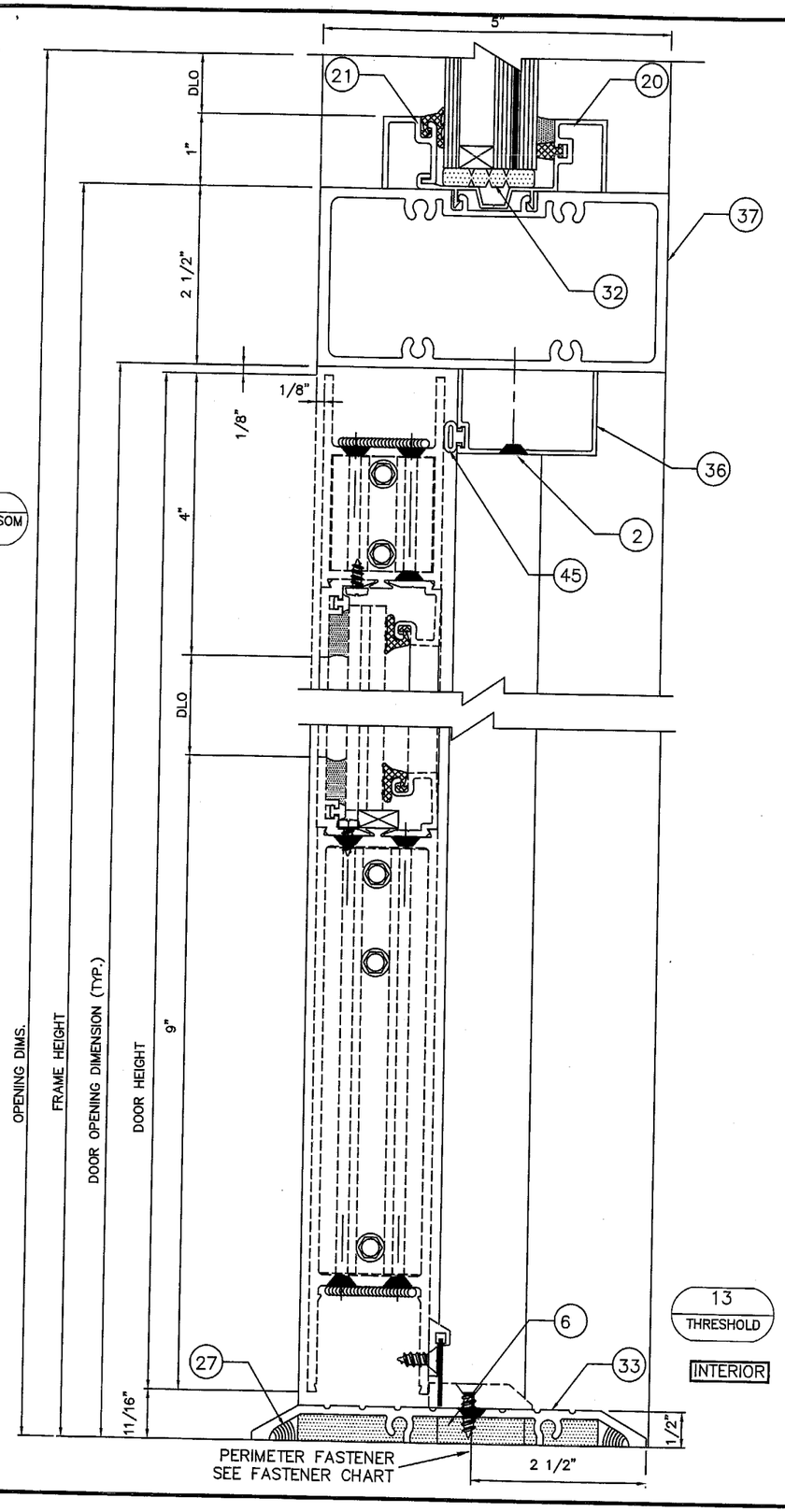

10
HEADER/TRANSOM HEADER

13
THRESHOLD

INTERIOR

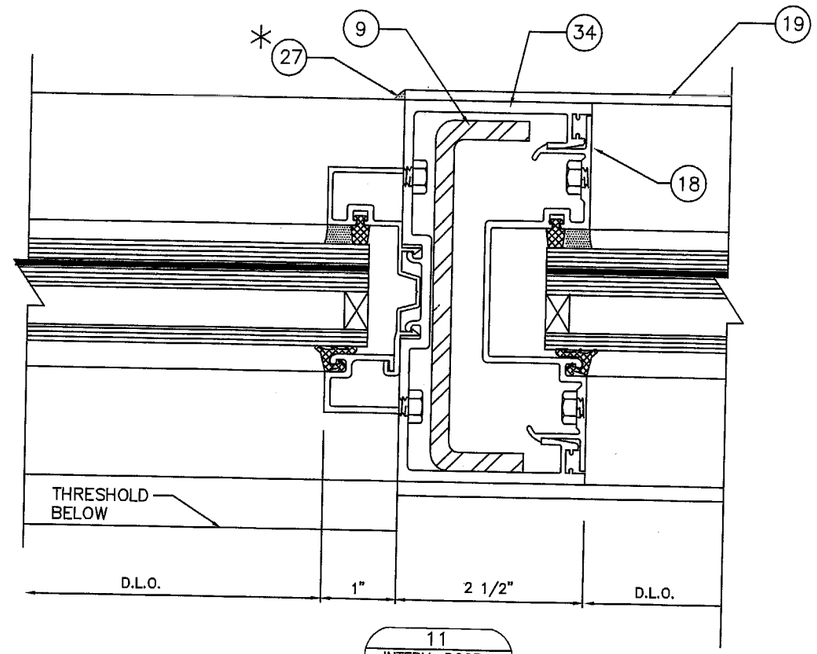

11
INTERM. DOOR JAMB @ TRANSOM

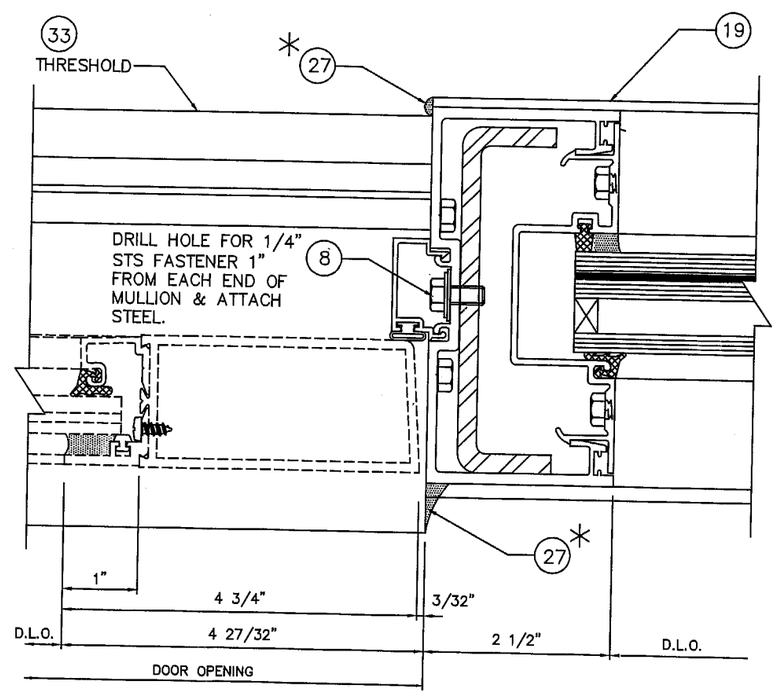

12
INTERM. DOOR JAMB

1 *TYPICAL EXTERIOR GASKET

5 *TYPICAL INTERIOR SPACER GASKET

6 *TYP. @ ALL JOINT INTERSECTIONS

7 *TYPICAL AT ALL SPLINES

26 *or 38 *TYPICAL INTERIOR SEALANT

27 *TYPICAL EXTERIOR & INTERIOR SEALANT

BROMLEY • COOK ENGINEERING
Structural Engineering Services
2004 N.E. 49th Street
Ft. Lauderdale, FL 33308
954-772-4624

JUL - 1 2004

WILLIAM D. COOK P.E
FLA. P.E. #43904
FLA. S.I. #2008

Approved as complying with the Florida Building Code
Date 08/19/04
NOA# 04-0308.02
Miami Dade Product Control Division
By

DRAWINGS FOR DADE COUNTY PRODUCT APPROVAL

REV	BY	DATE	DESCRIPTION

MANUAL COMP

VISTAWALL ARCHITECTURAL PRODUCTS
803 AIRPORT RD. TERRELL TX 75160 (972) 551-6100
THE VISTAWALL GROUP
BUTLER MANUFACTURING COMPANY

PROJECT
PRODUCT APPROVAL DRAWINGS
FG-5100 WINDOW WALL SYSTEM
PROTOCOLS: PA 201/202/203

FRAMING DETAILS

PROJECT NO.

DRAWN WRD | DATE 1/16/04

SCALE 6"=1'-0"

DRAWING NO. FG5100_02

SHEET 11 OF 16

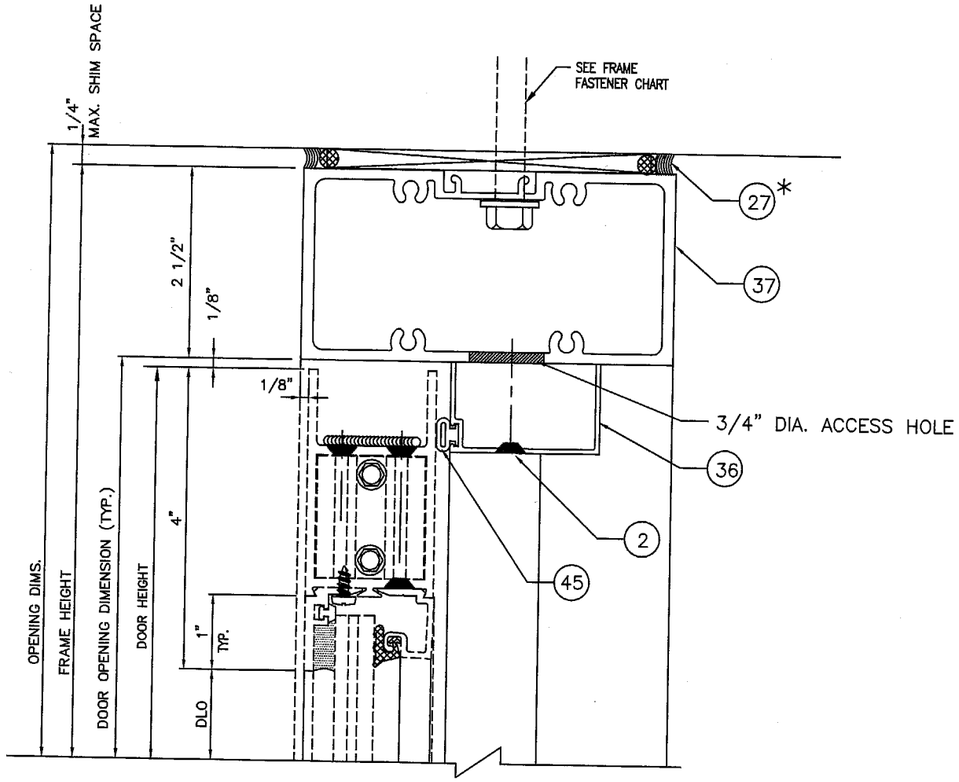

14
HEADER W/O TRANSOM

7* TYPICAL AT ALL SPLINES

1* TYPICAL EXTERIOR GASKET

26* or 38* TYPICAL INTERIOR SEALANT

6* TYP. @ ALL JOINT INTERSECTIONS

27* TYPICAL EXTERIOR & INTERIOR SEALANT

5* TYPICAL INTERIOR SPACER GASKET

BROMLEY • COOK ENGINEERING
Structural Engineering Services
2004 N.E. 49th Street
Ft. Lauderdale, FL 33308
954-772-4624

JUL - 1 2004

WILLIAM D. COOK P.E
FLA. P.E. #43904
FLA. S.I. #2008

Approved as complying with the Florida Building Code
Date 08/19/04
NOA# 04-0308.02
Miami Dade Product Control Division
By

DRAWINGS FOR DADE COUNTY PRODUCT APPROVAL

REV	BY	DATE	DESCRIPTION

MANUAL COMP

VISTAWALL ARCHITECTURAL PRODUCTS
808 AIRPORT RD. TERRELL TX 75160 (972) 551-6100

THE VISTAWALL GROUP
BUTLER MANUFACTURING COMPANY

PROJECT
PRODUCT APPROVAL DRAWINGS
FG-5100 WINDOW WALL SYSTEM
PROTOCOLS: PA 201/202/203

FRAMING DETAILS

PROJECT NO.

DRAWN WRD | DATE 1/16/04

SCALE 6"=1'-0"

DRAWING NO. FG5100_02

SHEET 12 OF 16

BILL OF MATERIALS

ITEM No.	PART NUMBER	DESCRIPTION	DIMENSIONS	MATERIAL	MANUFACTURER	NOTES
1.	FG-1133	EXTERIOR GLAZING GASKET	.197 SPACE	EPDM	VARIES	FOR 1 5/16" OR 5/8" GLAZING
2.	FS-119	FOR ATTACHING DS-104 DOOR STOP @ HEAD	#10 X 1 3/8" PFH "B"	STEEL	VARIES	HOLES PRE-PUNCHED 12" O.C.
3.	FG-5186	SETTING BLOCK SILL & HORIZONAL	4" LONG	SILICONE	VARIES	
4.	FG-5187	TRANSITION SETTING BLOCK @ SILL & HORIZONTAL	4" LONG	EPDM	VARIES	
5.	FG-5185	SPACER GASKET	.25 X .25	SILICONE	VARIES	
6.	SM-5601	JOINT SEALANT TAPE	.125 X .50 VARIES	BUTYL	SCHNEE-MOREHEAD	
7.	FS-8	SPLINE ASSEMBLY SCREW	#14 X 1 HHSTS	STEEL	VARIES	
8.	FS-38	ATTACH STEEL REINFORCEMENT	1/4-20 X ½" HH TYPE F	STEEL	VARIES	1" FROM EACH END
9.	9955	STEEL CHANNEL FOR FG-5168 @ INTERM. JAMB	1.25 X 4.562 X .250	A36 STEEL	VARIES	FULL MULLION LENGTH
10.	9956	STEEL CHANNEL FOR FG-5173 @ ALTERNATE JAMB	1.25 X 4.681 X 12 GA.	A36 STEEL	VARIES	ALT. WALL JAMB, FULL MULLION LENGTH
11.	FG-5167	FLAT FILLER @ JAMB	.780 X 4.66 X .080	6063-T6 ALUMINUM	VISTAWALL	USE @ ALT. WALL JAMB
12.	FG-5173	MULLION	2.50 X 5.00 X .094	6063-T6 ALUMINUM	VISTAWALL	
13.	FG-5174	JAMB MULLION	2.50 X 5.00 X .094	6063-T6 ALUMINUM	VISTAWALL	
14.	FG-5175	HEAVY MULLION	2.5 X 5.00 X .094	6063-T6 ALUMINUM	VISTAWALL	
15.	FG-5176	INTERMEDIATE HORIZONTAL	2.50 X 4.98 X .080	6063-T6 ALUMINUM	VISTAWALL	.
16.	FG-5177	GLASS STOP	1.25 X 1.41 X .078	6063-T6 ALUMINUM	VISTAWALL	
17.	FG-5178	HEAD/SILL	2.50 X 4.98 X .080	6063-T6 ALUMINUM	VISTAWALL	.
18.	FG-5179	OPEN BACK MULLION FILLER	.780 X 4.66 X .08	6063-T6 ALUMINUM	VISTAWALL	
19.	FG-5180	SUB-SILL FLASHING	2.62 X 5.40 X .078	6063-T6 ALUMINUM	VISTAWALL	
20.	FG-5181	TRANSOM SASH	1.00 X 2.69 X .062	6063-T5 ALUMINUM	VISTAWALL	
21.	FG-5182	TRANSOM GLASS STOP	1.00 X .767 X .062	6063-T5 ALUMINUM	VISTAWALL	
22.	FG-5183	TRANSITION GLAZING ADAPTER	.72 X .61 X .078	6063-T5 ALUMINUM	VISTAWALL	.
23.	FG-5184	SETTING CHAIR	1.062 X 1.59 X .094	6063-T5 ALUMINUM	VISTAWALL	CUT 4" LONG
24.	FG5000-FP-10	SILL FLASHING END DAM	2.50 X 1.00 X .062	6063-T5 ALUMINUM	VISTAWALL	5.00" LONG
25.	FG5100-FP-5	WATER DIVERTER	.876 X 1.465 X .032	RIGID PVC	VISTAWALL	CUT 1.562 LONG & LOCATE @ EACH END
26.	DOW 995	STRUCTURAL SILICONE	FILL SPACE	SILICONE	DOW CORNING	
27.	921	USED AS PERIMETER SEALANT	FILL SPACE	POLYURETHANE	VULKEM	EXTERIOR & INTERIOR
28.	FASTENER	SCREW FOR ATTACHING FG5000-FP-10 TO FG-5166	#10-24 X 3/8" UCPFH	STEEL	VARIES	2 EACH REQUIRED PER END DAM
29.	FASTENER	FOR ATTACHING SUBSILL FLASHING TO CONCRETE SUBSTRATE	3/16" X 2" SHWH	STAINLESS STEEL	TAPCON	1" MIN. EMBEDMENT NON-STRUCTURAL
30.	FASTENER	FOR ATTACHING SUBSILL FLASHING TO WOOD SUBSTRATE	3/16" X 2" LAG BOLT	STEEL	VARIES	1" MIN. EMBEDMENT NON-STRUCTURAL
31.	FASTENER	FOR ATTACHING SUBSILL FLASHING TO STL SUBSTRATE	3/16" X 1" DRILL FLEX #5	STEEL	VARIES	1" MIN. EMBEDMENT NON-STRUCTURAL
32.	HP-17	SETTING BLOCK	3/4" X 1/4" X 4"	EPDM	VARIES	
33.	TH-57	THRESHOLD	.50 X 5.625 X .125	6063-T5 ALUMINUM	VISTAWALL	
34.	FG-5168	DOOR JAMB	2.50 X 5.00 X .125	6063-T6 ALUMINUM	VISTAWALL	
35.	FG-5163	SNAP IN DOOR STOP	.50 X 1.36 X .062	6063-T6 ALUMINUM	VISTAWALL	
36.	DS-104	OFFSET ARM DOOR STOP	1.88 X 2.00 X .094	6063-T6 ALUMINUM	VISTAWALL	
37.	FG-5172	DOOR TRANSOM	2.50 X 4.98 X .135	6063-T6 ALUMINUM	VISTAWALL	
38.	SPECTREM 2	STRUCTURAL SILICONE	FILL SPACE	SILICONE	TREMCO	
39.	FASTENER	FOR ATTACHING HEAD/SILL & JAMB TO STL. SUBSTRATE	3/8" X 1 1/2" TEK SCREW	STEEL	VARIES	2" MIN. SPACING
40.	FASTENER	FOR ATTACHING HEAD/SILL & JAMB TO WOOD SUBSTRATE	3/8" X 3 1/2" LONG LAG BOLTS	STEEL	VARIES	3" MIN. EMBEDMENT, 2" MIN. SPACING
41.	FASTENER	FOR ATTACHING SILL & JAMB TO CONCRETE SUBSTRATE	3/8" X 2 1/2" LONG LTD TAPCON	STEEL	VARIES	2" MIN. EMBEDMENT, 6" MIN. SPACING
42.	FASTENER	FOR ANCHORING TH-57 THRESHOLD TO WOOD SUBSTRATE	#14 X 3 1/2" WOOD SCREW	STEEL	VARIES	3" MIN. EMBEDMENT
43.	FASTENER	FOR ANCHORING TH-57 THRESHOLD TO STEEL SUBSTRATE	1/4" GRADE 2 MACHINE SCREW	STEEL	VARIES	
44.	FASTENER	FOR ANCHORING TH-57 THRESHOLD TO CONCRETE SUBSTRATE	1/4" X 3" TAPCON	STEEL	VARIES	2" MIN. EMBEDMENT
45.	D-125	DOOR STOP WEATHERING	.125 SPACE	SANTOPRENE	UNIVERSAL RUBBER	

BROMLEY • COOK ENGINEERING
Structural Engineering Services
2004 N.E. 49th Street
Ft. Lauderdale, FL 33308
954-772-4624

JUL - 1 2004

WILLIAM D. COOK P.E
FLA. P.E. #43904
FLA. S.I. #2008

Approved as complying with the Florida Buiding Code
Date 08/19/04
NOA# 04-0308.02
Miami Dade Product Control Division
By

DRAWINGS FOR DADE COUNTY PRODUCT APPROVAL

REV	BY	DATE	DESCRIPTION

MANUAL COMP

VISTAWALL ARCHITECTURAL PRODUCTS
803 AIRPORT RD. TERRELL TX 75160 (972) 551-6100
THE VISTAWALL GROUP
BUTLER MANUFACTURING COMPANY

PRODUCT APPROVAL DRAWINGS
FG-5100 WINDOW WALL SYSTEM
PROTOCOLS: PA 201/202/203
BILL OF MATERIALS
FRAMING

PROJECT
PROJECT NO.
DRAWN WRD
DATE 1/16/04
SCALE
DRAWING NO. FG5100_02
SHEET 13 OF 16

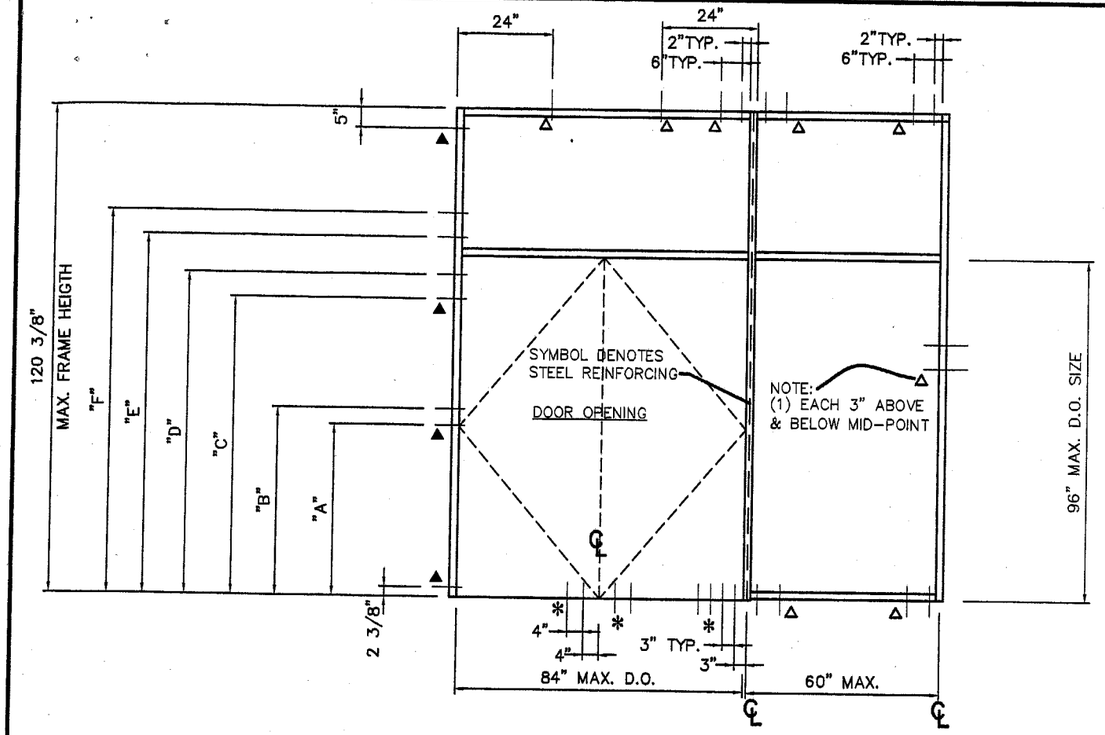

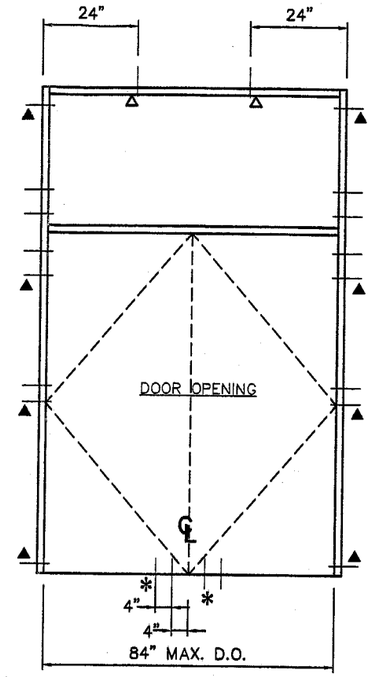

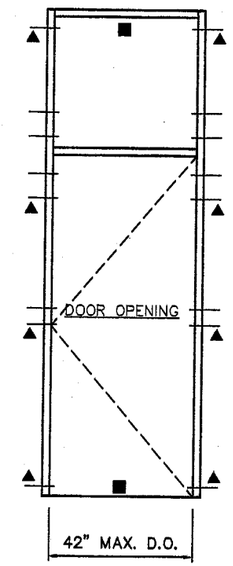

■=NON-STRUCTRUAL FASTENERS MAY BE REQUIRED FOR ATTACHING THE THRESHOLD AND HEADER TO THE OPENING

D.O. HGT.	ANCHOR LOCATIONS FOR "LETTER" DIM.					
	"A"	"B"	"C"	"D"	"E"	"F"
84"	45 1/2"	51 1/2"	76"	82"	89"	95"
96"	45 1/2"	51 1/2"	88"	94"	100"	106"

PERIMETER FASTENER LOCATIONS

TYPICAL INSTALLATION INTO: CONCRETE SUBSTRATE MIN. 2500 P.S.I.

▲ 3/8" TAPCON
2" MIN. EMBEDMENT
WITH FILLER PLATE. FULL LENGTH OF MULLION

△ 3/8" TAPCON
2" MIN. EMBEDMENT

* 1/4" PFH TAPCON
1 3/4" MIN. EMBEDMENT

6" MIN. SPACING @ 3/8"Ø TAPCON
3" MIN. SPACING @ 1/4"Ø TAPCON

PAIRS MUST HAVE RODS OR PINS PENETRATING INTO DOOR HEADER/TRANSOM BAR AND THRESHOLD SUCH AS PANICS. OPTIONAL HARDWARE IS FLUSH BOLTS IN INACTIVE LEAF AND 3-POINT LOCKS IN THE ACTIVE LEAF. USE ONLY FB-1201-VRM FLUSH BOLTS.

TH-58 THRESHOLD MUST BE USED ON DOOR FRAME. TWO (2) EACH FS-8 (#14x1") SPLINE JOINERY SCREWS ARE USED TO ATTACH THRESHOLD TO EACH JAMB OR ALTERNATE THRESHOLD TH-43 MAY BE USED WITH CLIPS

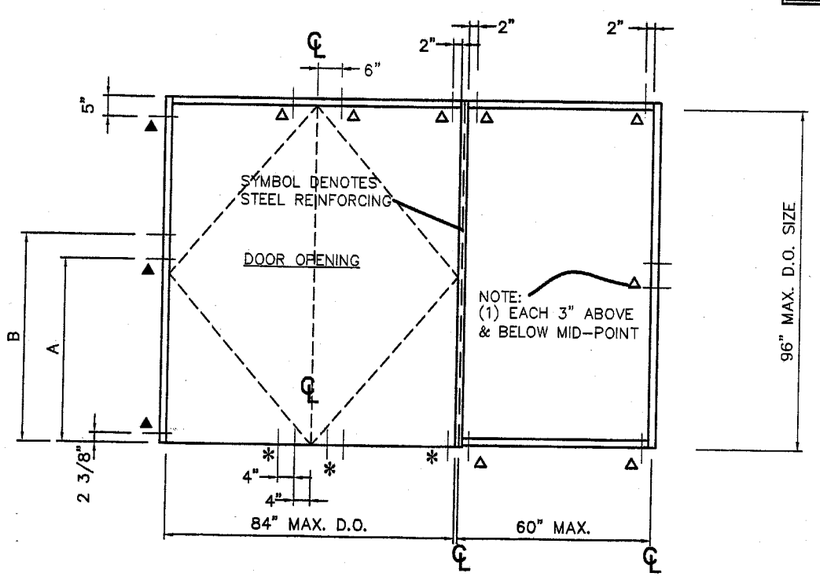

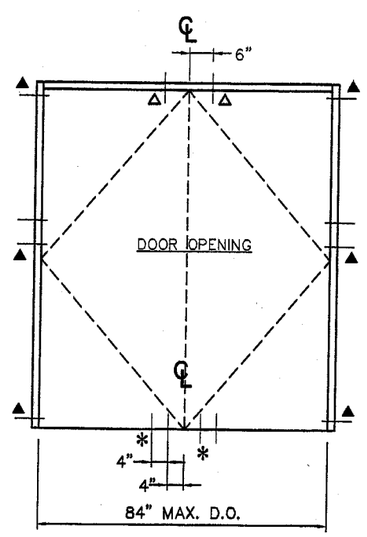

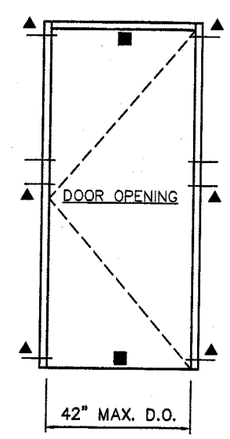

■=NON-STRUCTRUAL FASTENERS MAY BE REQUIRED FOR ATTACHING THE THRESHOLD AND HEADER TO THE OPENING

BROMLEY • COOK ENGINEERING
Structural Engineering Services
2004 N.E. 49th Street
Ft. Lauderdale, FL 33308
954-772-4624

WILLIAM D. COOK P.E
FLA. P.E. #43904
FLA. S.I. #2008

JUL - 5 2004

Approved as complying with the Florida Building Code
Date 08/19/04
NOA# 04-0308.02
Miami Dade Product Control Division
By

DRAWINGS FOR DADE COUNTY PRODUCT APPROVAL

MANIAL CORP

VISTAWALL ARCHITECTURAL PRODUCTS
214 WALT SANDERS MEMORIAL BLVD. NEWNAN, GA. 30265 (770) 252-3090

PRODUCT APPROVAL DRAWINGS
FG-5100 WINDOW WALL SYSTEM
PROTOCOLS: PA201,202,203

PROJECT NO.

DRAWN	DATE
WRD	1/16/0

SCALE 3/8"=1'-0'

DRAWING NO. FG5100_02

SHEET 14 OF 1

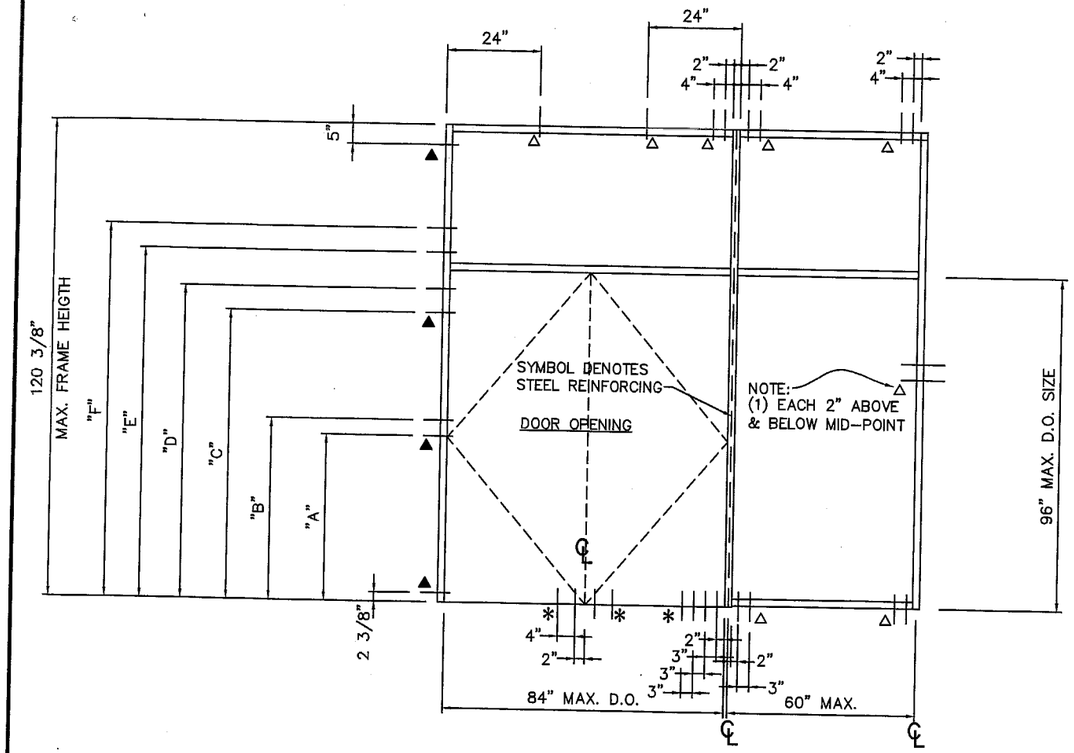

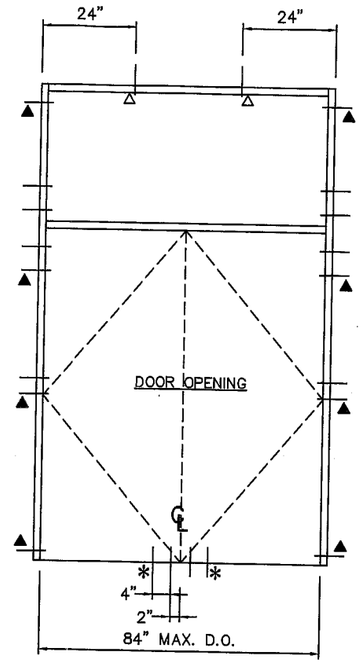

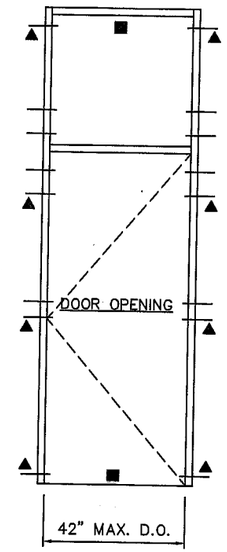

■=NON-STRUCTRUAL FASTENERS MAY BE REQUIRED FOR ATTACHING THE THRESHOLD AND HEADER TO THE OPENING

D.O. HGT.	ANCHOR LOCATIONS FOR "LETTER" DIM.					
	"A"	"B"	"C"	"D"	"E"	"F"
84"	45 1/2"	51 1/2"	76"	82"	89"	95"
96"	45 1/2"	51 1/2"	88"	94"	100"	106"

PERIMETER FASTENER LOCATIONS

TYPICAL INSTALLATION INTO: STEEL SUBSTRATE

▲ 3/8"Ø x 3 1/2" TEK SCREW FILLER PLATE. FULL LENGTH OF MULLION

△ 3/8"Ø x 1 1/2" TEK SCREW

* 1/4"-12 x 1 1/2" PFH #3 TEK SCREW 2" MIN. SPACING

PAIRS MUST HAVE RODS OR PINS PENETRATING INTO DOOR HEADER/TRANSOM BAR AND THRESHOLD SUCH AS PANICS. OPTIONAL HARDWARE IS FLUSH BOLTS IN INACTIVE LEAF AND 3-POINT LOCKS IN THE ACTIVE LEAF. USE ONLY FB-1201-VRM FLUSH BOLTS.

TH-58 THRESHOLD MUST BE USED ON DOOR FRAME. TWO (2) EACH FS-8 (#14x1") SPLINE JOINERY SCREWS ARE USED TO ATTACH THRESHOLD TO EACH JAMB OR ALTERNATE THRESHOLD TH-43 MAY BE USED WITH CLIPS

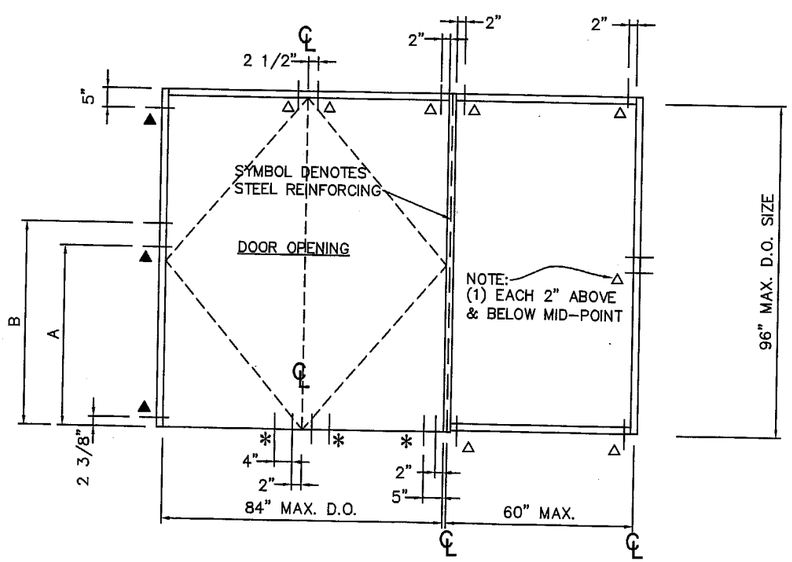

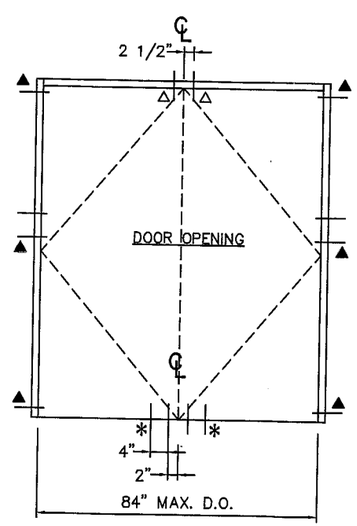

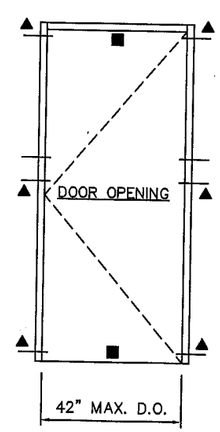

■=NON-STRUCTRUAL FASTENERS MAY BE REQUIRED FOR ATTACHING THE THRESHOLD AND HEADER TO THE OPENING

BROMLEY • COOK ENGINEERING
Structural Engineering Services
2004 N.E. 49th Street
Ft. Lauderdale, FL 33308
954-772-4624

JUL - 1 2004

WILLIAM D. COOK PE
FLA. P.E. #43904
FLA. S.I. #2008

Approved as complying with the Florida Buiding Code
Date 08/19/05
NOA# 04-0308.02
Miami Dade Product Control Division
By

DRAWINGS FOR DADE COUNTY PRODUCT APPROVAL

REV	BY	DATE	DESCRIPTION

MANUAL COMP

VISTAWALL ARCHITECTURAL PRODUCTS
214 WALT SANDERS MEMORIAL BLVD. NEWNAN, GA. 30265 (770) 252-3090
THE VISTAWALL GROUP
BUTLER MANUFACTURING COMPANY

PROJECT
PRODUCT APPROVAL DRAWINGS
FG-5100 WINDOW WALL SYSTEM
PROTOCOLS: PA201,202,203
PERIMETER FASTENER CHARTS

PROJECT NO.

DRAWN	DATE
WRD	1/16/04

SCALE 3/8"=1'-0"

DRAWING NO. FG5100_02

SHEET 15 OF 16

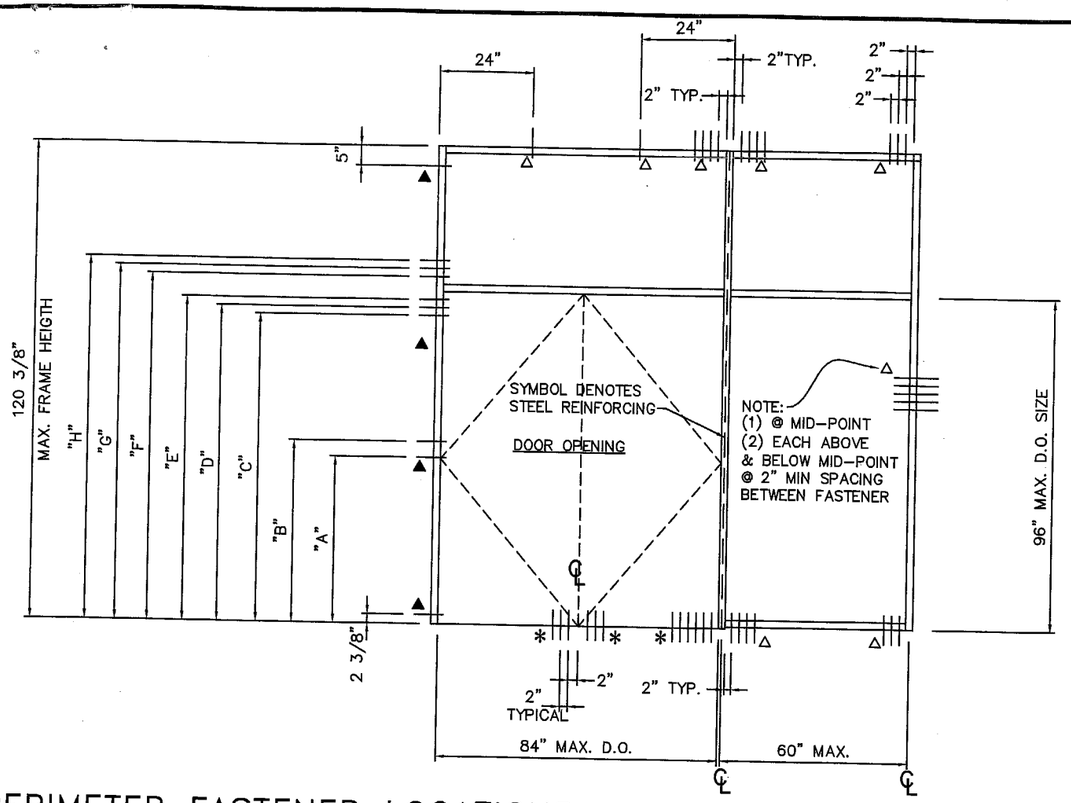

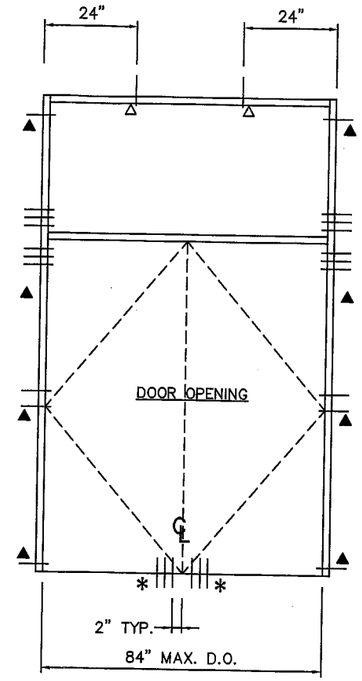

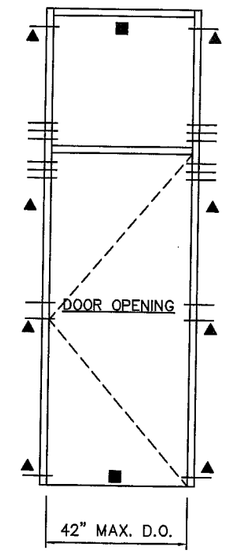

■=NON-STRUCTRUAL FASTENERS MAY BE REQUIRED FOR ATTACHING THE THRESHOLD AND HEADER TO THE OPENING

PERIMETER FASTENER LOCATIONS

TYPICAL INSTALLATION INTO: WOOD SUBSTRATE

D.O. HGT.	ANCHOR LOCATIONS FOR "LETTER" DIM. "A"	"B"	"C"	"D"	"E"	"F"	"G"	"H"
84"	45 1/2"	50 1/2"	78"	80"	82"	89"	91"	93"
96"	45 1/2"	50 1/2"	90"	92"	94"	100"	102"	104"

▲ 3/8" LAG BOLT WITH FILLER PLATE. FULL LENGTH OF MULLION

△ 3/8" LAG BOLT

* #14 WOOD SCREW
3" PENETRATION INTO WOOD MEMBER
MIN. EDGE DISTANCE 1 1/2"
MIN. SPACING IS 2"
WOOD STRUCTURE IS MIN. #2 SYP

PAIRS MUST HAVE RODS OR PINS PENETRATING INTO DOOR HEADER/TRANSOM BAR AND THRESHOLD SUCH AS PANICS. OPTIONAL HARDWARE IS FLUSH BOLTS IN INACTIVE LEAF AND 3-POINT LOCKS IN THE ACTIVE LEAF. USE ONLY FB-1201-VRM FLUSH BOLTS.

TH-58 THRESHOLD MUST BE USED ON DOOR FRAME. TWO (2) EACH FS-8 (#14x1") SPLINE JOINERY SCREWS ARE USED TO ATTACH THRESHOLD TO EACH JAMB OR ALTERNATE THRESHOLD TH-43 MAY BE USED WITH CLIPS

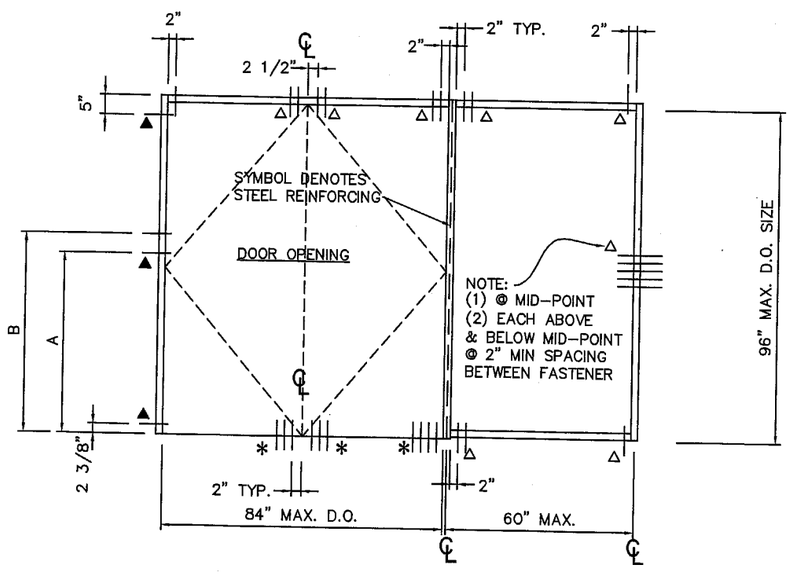

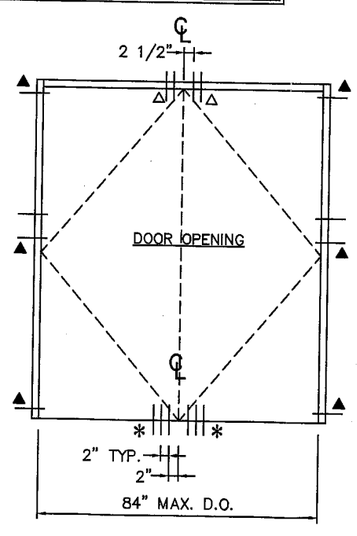

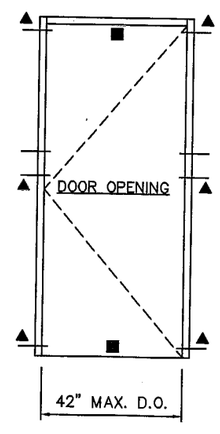

■=NON-STRUCTRUAL FASTENERS MAY BE REQUIRED FOR ATTACHING THE THRESHOLD AND HEADER TO THE OPENING

BROMLEY • COOK ENGINEERING
Structural Engineering Services
2004 N.E. 49th Street
Ft. Lauderdale, FL 33308
954-772-4624

JUL - 1 2004

WILLIAM D. COOK P.E
FLA. P.E. #43904
FLA. S.I. #2008

Approved as complying with the Florida Building Code
Date 08/19/05
NOA# 04-0308.02
Miami Dade Product Control Division
By

DRAWINGS FOR DADE COUNTY PRODUCT APPROVAL

REV	BY	DATE	DESCRIPTION

MANUAL COMP

VISTAWALL ARCHITECTURAL PRODUCTS
214 WALT SANDERS MEMORIAL BLVD. NEWNAN, GA. 30265 (770) 252-3090
THE VISTAWALL GROUP
BUTLER MANUFACTURING COMPANY

PRODUCT APPROVAL DRAWINGS
FG-5100 WINDOW WALL SYSTEM
PROTOCOLS: PA201,202,203

PERIMETER FASTENER CHARTS

PROJECT
PROJECT NO.
DRAWN WRD
DATE 1/16/04
SCALE 3/8"=1'-0"
DRAWING NO. FG5100_02
SHEET 16 OF 16