MIAMI-DADE

BUILDING CODE COMPLIANCE OFFICE (BCCO)
PRODUCT CONTROL DIVISION

MIAMI-DADE COUNTY, FLORIDA
METRO-DADE FLAGLER BUILDING
140 WEST FLAGLER STREET, SUITE 1603
MIAMI, FLORIDA 33130-1563
(305) 375-2901 FAX (305) 375-2908

NOTICE OF ACCEPTANCE (NOA)

PGT Industries
1070 Technology Drive
Nokomis, FL 34275

SCOPE:

This NOA is being issued under the applicable rules and regulations governing the use of construction materials. The documentation submitted has been reviewed by Miami-Dade County Product Control Division and accepted by the Board of Rules and Appeals (BORA) to be used in Miami Dade County and other areas where allowed by the Authority Having Jurisdiction (AHJ).

This NOA shall not be valid after the expiration date stated below. The Miami-Dade County Product Control Division (In Miami Dade County) and/or the AHJ (in areas other than Miami Dade County) reserve the right to have this product or material tested for quality assurance purposes. If this product or material fails to perform in the accepted manner, the manufacturer will incur the expense of such testing and the AHJ may immediately revoke, modify, or suspend the use of such product or material within their jurisdiction. BORA reserves the right to revoke this acceptance, if it is determined by Miami-Dade County Product Control Division that this product or material fails to meet the requirements of the applicable building code.

This product is approved as described herein, and has been designed to comply with the Florida Building Code, including the High Velocity Hurricane Zone.

DESCRIPTION: Series-SH 4000 Aluminum Single Hung Window

APPROVAL DOCUMENT: Drawing No. **2737,** titled "SH-4000 Alum. Single Hung Window W/H.D. MTG. Rail", sheets 1 through 6 of 6, prepared by manufacture, dated 04/18/01, with revision **"3"** dated 05/24/04, signed and sealed by Robert L. Clark, P.E., bearing the Miami-Dade County Product Control Revision stamp with the Notice of Acceptance number and expiration date by the Miami-Dade County Product Control Division.

MISSILE IMPACT RATING: None

LABELING: Each unit shall bear a permanent label with the manufacturer's name or logo, city, state and following statement: "Miami-Dade County Product Control Approved", unless otherwise noted herein.

RENEWAL of this NOA shall be considered after a renewal application has been filed and there has been no change in the applicable building code negatively affecting the performance of this product.

TERMINATION of this NOA will occur after the expiration date or if there has been a revision or change in the materials, use, and/or manufacture of the product or process. Misuse of this NOA as an endorsement of any product, for sales, advertising or any other purposes shall automatically terminate this NOA. Failure to comply with any section of this NOA shall be cause for termination and removal of NOA.

ADVERTISEMENT: The NOA number preceded by the words Miami-Dade County, Florida, and followed by the expiration date may be displayed in advertising literature. If any portion of the NOA is displayed, then it shall be done in its entirety.

INSPECTION: A copy of this entire NOA shall be provided to the user by the manufacturer or its distributors and shall be available for inspection at the job site at the request of the Building Official.

This NOA **revises NOA # 02-0702.03** and, consists of this page 1 and evidence pages E-1, and E-2, as well as approval document mentioned above.

The submitted documentation was reviewed by **Herminio F. Gonzalez, P.E., Director, BCCO**

Jay 11/10/04

PRODUCT CONTROL ACCEPTED

PGT Industries, Inc.

NOTICE OF ACCEPTANCE: EVIDENCE SUBMITTED

A. DRAWINGS

1. Manufacturers die drawings and sections.
2. Drawing No. **2737,** titled "SH-4000 Alum. Single Hung Window W/H.D. MTG. Rail", sheets 1 through 6 of 6, prepared by manufacture, dated 04/18/01, with revisions **"3"** dated 05/24/04, signed and sealed by Robert L. Clark, P.E.

B. TESTS

1. Test reports on 1) Air Infiltration Test, per FBC, TAS 202-94
   2) Uniform Static Air Pressure Test, Loading per FBC, TAS 202-94
   3) Water Resistance Test, per FBC, TAS 202-94
   4) Forced Entry Test, per FBC 2411.3.2.1 (b) and TAS 202-94

   along with marked-up drawings and installation diagram of aluminum single hung windows, prepared by Fenestration Testing Laboratory, Inc., Test Report No. **FTL-2957, 2959, 2965, and 2967** dated various, signed and sealed by Antonio Acevedo, P.E.
   "Submitted under NOA# 02-0702.03"
2. Test report on 1) Uniform Static Air Pressure Test, Loading per FBC, TAS 202-94 along with marked-up drawings and installation diagram of aluminum single hung window, prepared by Fenestration Testing Laboratory, Inc., Test Report No. **FTL-2958, 2961, 2963, 2964, 2966, 2968,and 2969,** dated 01/17/01, signed and sealed by Antonio Acevedo, P.E.
   "Submitted under NOA# 02-0702.03"
3. Test report on 1) Uniform Static Air Pressure Test, Loading per FBC, TAS 202-94 along with marked-up drawings and installation diagram of aluminum single hung window, prepared by Fenestration Testing Laboratory, Inc., Test Report No. **FTL-3986,** dated 01/17/01, signed and sealed by Edmundo J. Largaespada, P.E.
4. Test report on 1) Uniform Static Air Pressure Test, Loading per FBC, TAS 202-94 along with marked-up drawings and installation diagram of aluminum single hung window, prepared by Fenestration Testing Laboratory, Inc., Test Report No. **FTL-4253,** dated 06/21/04, signed and sealed by Edmundo J. Largaespada, P.E.
5. Test reports on 1) Air Infiltration Test, per FBC, TAS 202-94
   2) Uniform Static Air Pressure Test, Loading per FBC, TAS 202-94
   3) Water Resistance Test, per FBC, TAS 202-94
   4) Forced Entry Test, per FBC 2411.3.2.1 (b) and TAS 202-94

   along with marked-up drawings and installation diagram of aluminum single hung windows, prepared by Fenestration Testing Laboratory, Inc., Test Report No. **FTL-4178** dated 04/07/04, signed and sealed by Edmundo J. Largaespada, P.E.

Herminio F. Gonzalez, P.E.
Director, Building Code Compliance Office
NOA No 04-0319.02
Expiration Date: October 08, 2006
Approval Date: December 02, 2004

PGT Industries, Inc.

NOTICE OF ACCEPTANCE: EVIDENCE SUBMITTED

C. CALCULATIONS

1. Anchor Calculations, ASTM-E1300, and structural analysis, prepared by PGT Engineering, dated 02/12/04, signed and sealed by Robert L. Clark, P.E.
2. Revised Anchor Calculations dated 10/21/04, prepared, signed and sealed by Robert L. Clark, P.E.
3. Anchor Calculations dated 5/2/2000, last revised on 08-09-2001, prepared, signed and sealed by Robert L. Clark, P.E.
   "Submitted under NOA# 02-0702.03"

D. QUALITY ASSURANCE

1. Miami Dade Building Code Compliance Office (BCCO).

E. MATERIAL CERTIFICATIONS

1. None

F. STATEMENTS

1. Statement letter of conformance, dated May 11, 2001, signed by Robert L. Clark, P.E.
   "Submitted under NOA# 02-0702.03"
2. Statement letter of no financial interest, dated May 11, 2001, signed by Robert L. Clark, P.E.
   "Submitted under NOA# 02-0702.03"
3. Laboratory compliance statement as part of test reports for Test Report No. **FTL-2957**, and **2958**, issued by Fenestration Testing Laboratory, Inc., signed and sealed by signed and sealed by Antonio Acevedo, P.E.
   "Submitted under NOA# 02-0702.03"
4. "Expedite" file review request dated July 23, 2001, by PGT, signed by Robert L Clark, P.E.
   "Submitted under NOA# 02-0702.03"
5. Statement letter of conformance, dated March 17, 2004, signed by Robert L. Clark, P.E.

G. OTHER

1. Letter from the consultant stating that the product is in compliance with the Florida Building Code (Code).
2. Notice of Acceptance No. **02-0702.03**, issued to PGT Industries, for "SH-4000 Alum. Single Hung Window W/H.D. MTG. Rail", approved on 07/15/02 and expiring 10/08/06.

Herminio F. Gonzalez, P.E.
Director, Building Code Compliance Office
NOA No 04-0319.02
Expiration Date: October 08, 2006
Approval Date: December 02, 2004

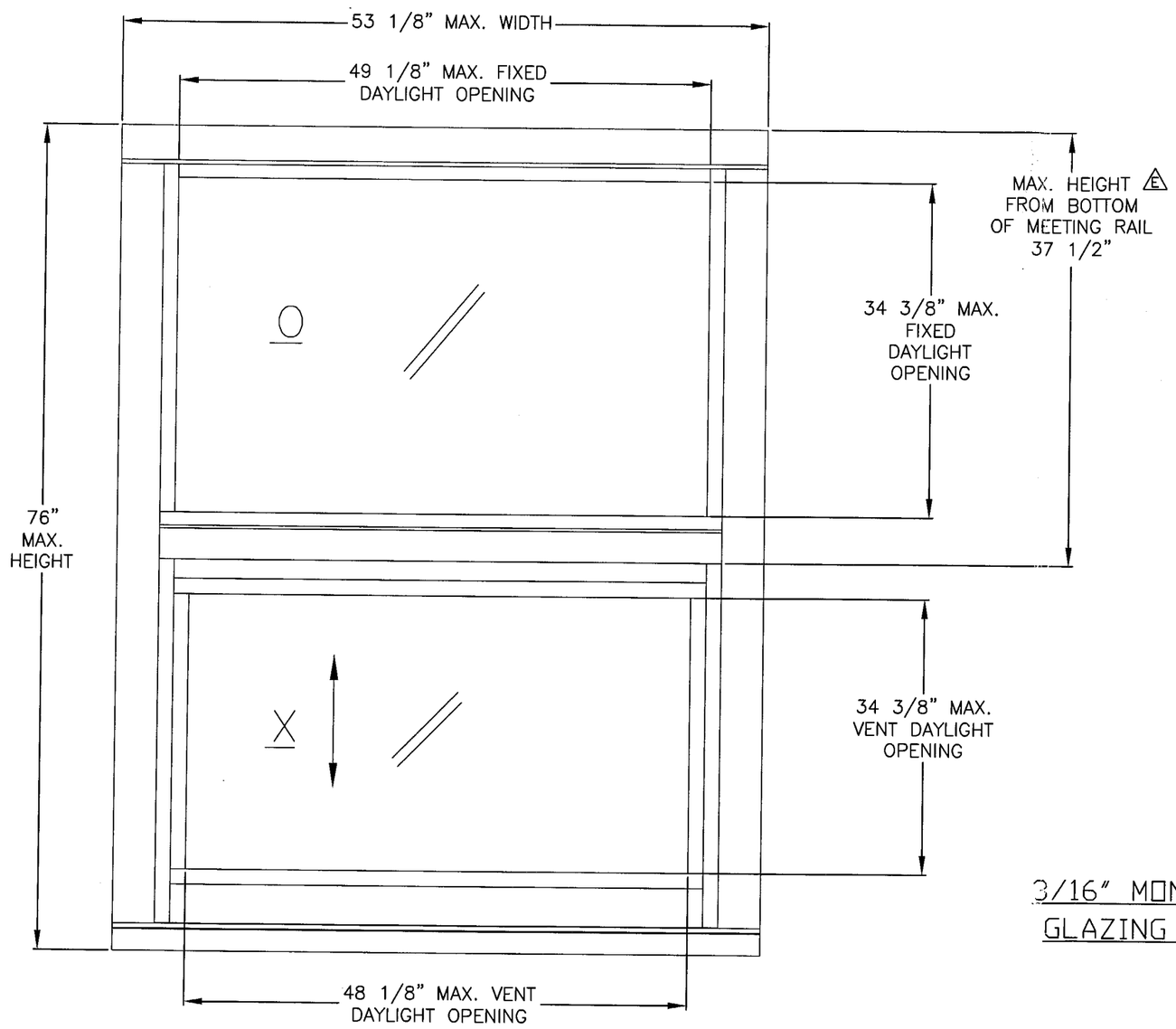

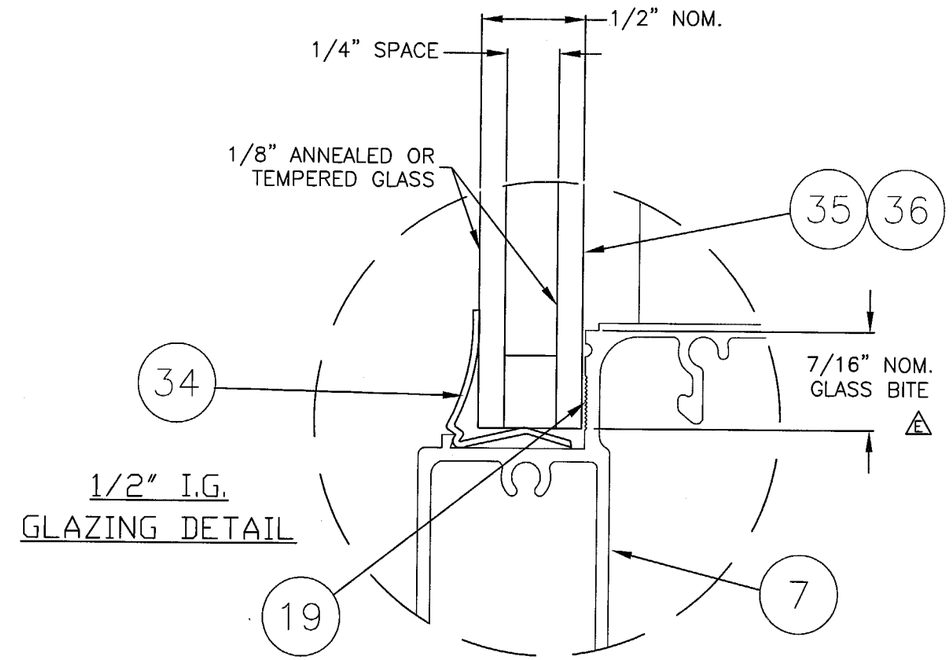

1/2" I.G. GLAZING DETAIL

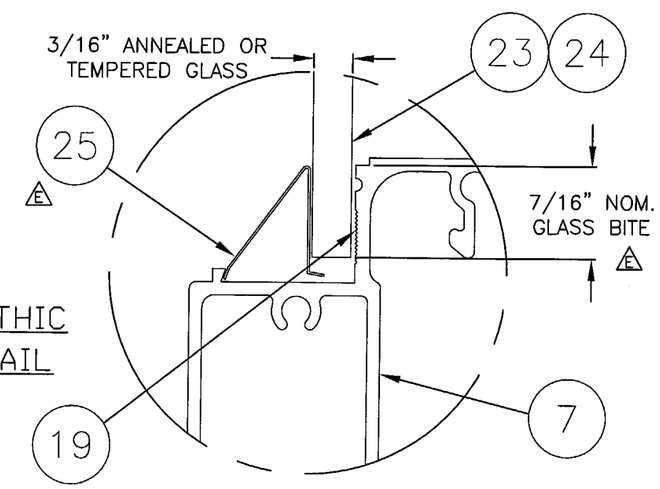

3/16" MONOLITHIC GLAZING DETAIL

PRODUCT REVISED
as complying with the Florida Building Code
Acceptance No 03-0319.02
Expiration Date 10/08/06
By
Miami Dade Product Control Division

NOTES: NON-IMPACT WINDOWS

1.) TEST REPORTS AND GLAZING OPTIONS: (SEE SHEET 2 FOR DESIGN PRESSURES)
   A.) FTL-2957, 3/16" TEMPERED GLASS
   B.) FTL-2958, 3/16" ANNEALED GLASS
   C.) FTL-3986, 1/2" I.G. GLASS (1/8" TEMPERED, 1/4" SPACE, 1/8" TEMPERED)
   D.) FTL-3987, 1/2" I.G. GLASS (1/8" ANNEALED, 1/4" SPACE, 1/8" ANNEALED)
   E.) FTL-4253, ALTERNATE SILL & REVISED ANCHORAGE
2.) MANUFACTURED WITH HEAVY DUTY MEETING RAIL
3.) SHUTTERS ARE REQUIRED AT ALL INSTALLATIONS
4.) SEE SHEET 3 FOR SECTION DETAILS. E
5.) SEE SHEETS 5 AND 6 FOR ANCHORAGE INFORMATION.

10/21/04

Robert L. Clark, P.E.
PE #39712
Structural

PGT
Visibly Better

1070 TECHNOLOGY DRIVE
NOKOMIS, FL 34275

P.O. BOX 1529
NOKOMIS, FL 34274

Revsd By:	Date:	Revisions:
F.K.	5/24/04	E-MARKED CORRECTIONS
F.K.	9/6/01	C-REDRAWN
F.K.	12/05/03	D-ADD IG GLASS & NOTES
Drawn By: F.K.	Date: 4/18/01	

Description: ELEVATION & GLAZING DETAILS

Title: ALUM. SINGLE HUNG WINDOW W/ H.D. MTG. RAIL

Series/Model:	Scale:	Sheet:	Drawing No.	Rev:
SH-4000	NTS	1 of 6	2737	E

COMPARATIVE ANALYSIS FOR:

FTL- 2957 & FTL-4253

GLASS: 3/16" TEMPERED

WINDOW WIDTH	WINDOW HEIGHT									
	26.000		38.375		50.625		63.000		76.000	
19.125	+56.7	-110.0	+56.7	-110.0	+56.7	-110.0	+56.7	-110.0	+56.7	-100.4
24.000	+56.7	-110.0	+56.7	-110.0	+56.7	-110.0	+56.7	-110.0	+56.7	-87.5
26.500	+56.7	-110.0	+56.7	-110.0	+56.7	-110.0	+56.7	-110.0	+56.7	-83.2
32.000	+56.7	-110.0	+56.7	-110.0	+56.7	-110.0	+56.7	-110.0	+56.7	-77.5
37.000	+56.7	-110.0	+56.7	-110.0	+56.7	-110.0	+56.7	-110.0	+56.7	-75.7
40.000	+56.7	-110.0	+56.7	-110.0	+56.7	-110.0	+56.7	-110.0	+56.7	-75.6
44.000	+56.7	-110.0	+56.7	-110.0	+56.7	-110.0	+56.7	-110.0	+56.7	-75.6
48.000	+56.7	-110.0	+56.7	-110.0	+56.7	-109.6	+56.7	-96.5	+56.7	-75.6
53.125	+56.7	-110.0	+56.7	-110.0	+56.7	-95.7	+56.7	-83.3	+56.7	-75.6

COMPARATIVE ANALYSIS FOR:

FTL- 2958

GLASS: 3/16" ANNEALED

WINDOW WIDTH	WINDOW HEIGHT									
	26.000		38.375		50.625		63.000		76.000	
19.125	+56.7	-110.0	+56.7	-110.0	+56.7	-110.0	+56.7	-110.0	+56.7	-86.3
24.000	+56.7	-110.0	+56.7	-110.0	+56.7	-110.0	+56.7	-100.3	+56.7	-75.2
26.500	+56.7	-110.0	+56.7	-110.0	+56.7	-110.0	+56.7	-97.0	+56.7	-71.6
32.000	+56.7	-110.0	+56.7	-110.0	+56.7	-101.7	+56.7	-81.9	+56.7	-66.7
37.000	+56.7	-110.0	+56.7	-110.0	+56.7	-86.4	+56.7	-70.9	+56.7	-61.9
40.000	+56.7	-110.0	+56.7	-110.0	+56.7	-80.9	+56.7	-65.8	+56.7	-57.7
44.000	+56.7	-110.0	+56.7	-110.0	+56.7	-73.1	+56.7	-59.2	+52.3	-52.3
48.000	+56.7	-110.0	+56.7	-104.4	+56.7	-64.8	+53.9	-53.9	+48.0	-48.0
53.125	+56.7	-110.0	+56.7	-99.7	+56.7	-59.5	+47.9	-47.9	+43.1	-43.1

COMPARATIVE ANALYSIS FOR:

FTL- 3986 E

GLASS: 1/2" I.G. (1/8" TEMPERED, 1/4" SPACE, 1/8" TEMPERED)

WINDOW WIDTH	WINDOW HEIGHT									
	26.000		38.375		50.625		63.000		76.000	
19.125	+56.7	-110.0	+56.7	-110.0	+56.7	-110.0	+56.7	-110.0	+56.7	-99.6
24.000	+56.7	-110.0	+56.7	-110.0	+56.7	-110.0	+56.7	-110.0	+56.7	-86.8
26.500	+56.7	-110.0	+56.7	-110.0	+56.7	-110.0	+56.7	-110.0	+56.7	-82.6
32.000	+56.7	-110.0	+56.7	-110.0	+56.7	-110.0	+56.7	-109.1	+56.7	-76.9
37.000	+56.7	-110.0	+56.7	-110.0	+56.7	-110.0	+56.7	-109.1	+56.7	-75.1
40.000	+56.7	-110.0	+56.7	-110.0	+56.7	-110.0	+56.7	-109.1	+56.7	-75.0
44.000	+56.7	-110.0	+56.7	-110.0	+56.7	-110.0	+56.7	-109.1	+56.7	-75.0
48.000	+56.7	-110.0	+56.7	-110.0	+56.7	-108.7	+56.7	-95.7	+56.7	-75.0
53.125	+56.7	-110.0	+56.7	-110.0	+56.7	-94.9	+56.7	-82.6	+56.7	-75.0

COMPARATIVE ANALYSIS FOR:

FTL- 3987 E

GLASS: 1/2" I.G. (1/8" ANNEALED, 1/4" SPACE, 1/8" ANNEALED)

WINDOW WIDTH	WINDOW HEIGHT									
	26.000		38.375		50.625		63.000		76.000	
19.125	+56.7	-110.0	+56.7	-110.0	+56.7	-110.0	+56.7	-110.0	+56.7	-86.3
24.000	+56.7	-110.0	+56.7	-110.0	+56.7	-110.0	+56.7	-100.3	+56.7	-75.2
26.500	+56.7	-110.0	+56.7	-110.0	+56.7	-110.0	+56.7	-97.0	+56.7	-71.6
32.000	+56.7	-110.0	+56.7	-110.0	+56.7	-103.3	+56.7	-91.4	+56.7	-66.7
37.000	+56.7	-110.0	+56.7	-101.7	+56.7	-89.3	+56.7	-78.6	+56.7	-65.0
40.000	+56.7	-110.0	+56.7	-94.5	+56.7	-81.5	+56.7	-72.4	+56.7	-65.0
44.000	+56.7	-110.0	+56.7	-85.5	+56.7	-72.1	+56.7	-66.0	+56.7	-59.1
48.000	+56.7	-110.0	+56.7	-81.3	+56.7	-64.3	+56.7	-60.7	+53.6	-53.6
53.125	+56.7	-110.0	+56.7	-77.7	+55.7	-55.7	+53.4	-53.4	+49.6	-49.6

PRODUCT REVISED
as complying with the Florida Building Code
Acceptance No 04-0319.02
Expiration Date 10/08/06
By
Miami Dade Product Control Division

NOTES:

1. NEGATIVE DESIGN LOADS BASED ON TESTED PRESSURE AND GLASS TABLES ASTM E 1300–98 (ASTM E 1300–94 OUTSIDE MIAMI–DADE COUNTY).
2. POSITIVE DESIGN LOADS BASED ON WATER TEST PRESSURE AND GLASS TABLES ASTM E 1300–98 (ASTM E 1300–94 OUTSIDE MIAMI–DADE COUNTY).
3. SEE SHEETS 5 AND 6 FOR ANCHORAGE INFORMATION. E

10/21/04

Robert L. Clark, P.E.
PE #39712
Structural

PGT
Visibly Better

1070 TECHNOLOGY DRIVE
NOKOMIS, FL 34275

P.O. BOX 1529
NOKOMIS, FL 34274

Revsd By:	Date:	Revisions:
F.K.	5/24/04	E-UPDATE TABLES
F.K.	12/05/03	D-NEW SHT, ADD IG
Drawn By: F.K.	Date: 4/18/01	

Description: DESIGN PRESSURES

Title: ALUM. SINGLE HUNG WINDOW W/ H.D. MTG. RAIL

Series/Model:	Scale:	Sheet:	Drawing No.	Rev:
SH-4000	NTS	2 of 6	2737	E

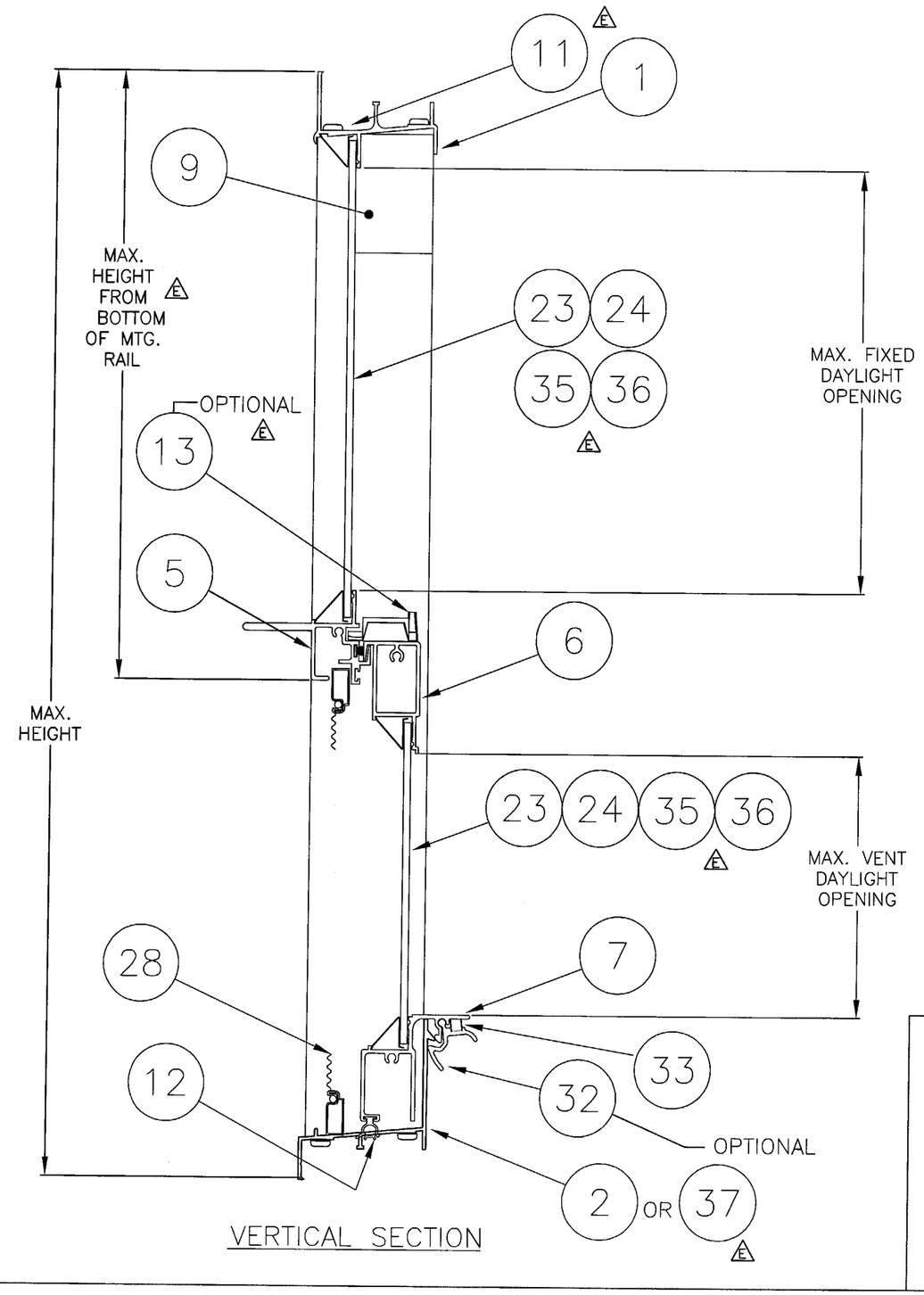

VERTICAL SECTION

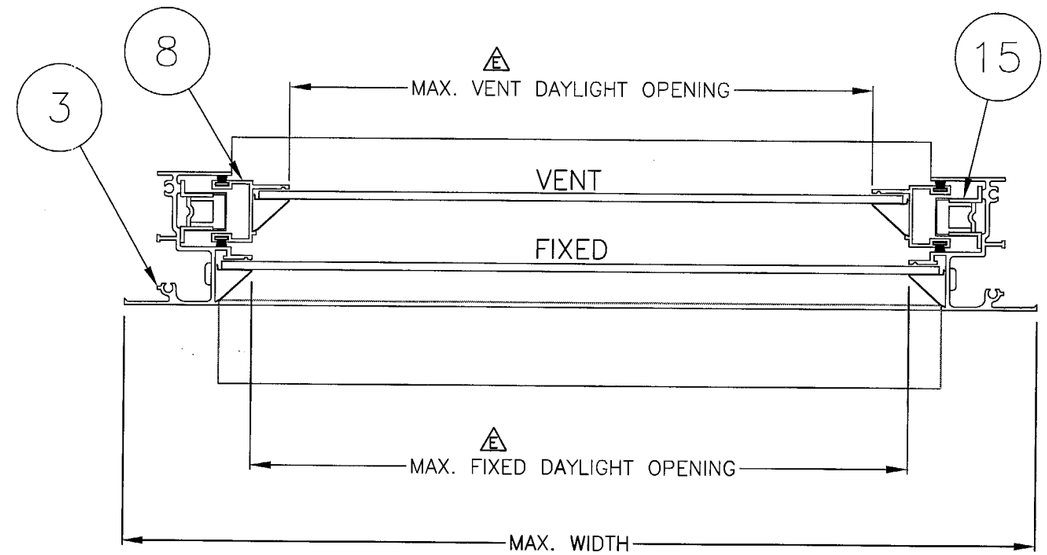

HORIZONTAL SECTION

PRODUCT REVISED
as complying with the Florida Building Code
Acceptance No 04-0319.02
Expiration Date 10/08/06
By [signature]
Miami Dade Product Control Division

10/21/04

Robert L. Clark, P.E.
PE #39712
Structural

PGT
Visibly Better

1070 TECHNOLOGY DRIVE
NOKOMIS, FL 34275

P.O. BOX 1529
NOKOMIS, FL 34274

Revsd By:	Date:	Revisions:
F.K.	5/24/04	E-ADD 37 & CORRECTIONS
F.K.	9/6/01	C-REDRAWN
F.K.	12/05/03	D-MOVE NOTES SHT 1
Drawn By: F.K.	Date: 4/18/01	

Description: SECTIONS

Title: ALUM. SINGLE HUNG WINDOW W/ H.D. MTG. RAIL

Series/Model:	Scale:	Sheet:	Drawing No.	Rev:
SH-4000	NTS	3 of 6	2737	E

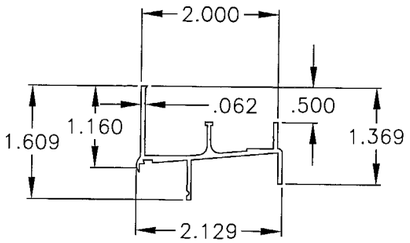

1 HEAD EXTRUSION

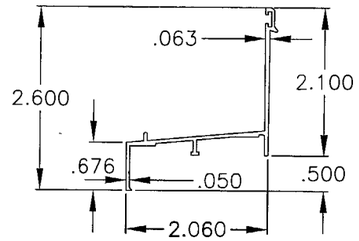

2 SILL EXTRUSION

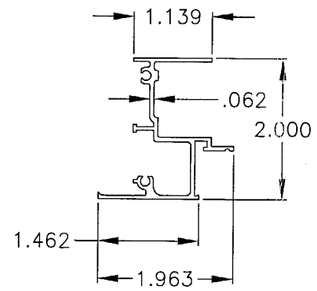

3 JAMB EXTRUSION

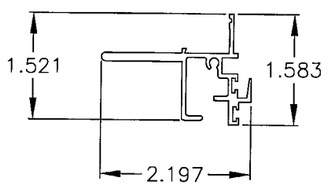

5 HEAVY DUTY MEETING RAIL

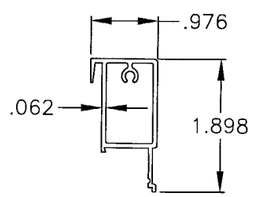

6 SASH TOP RAIL EXTRUSION

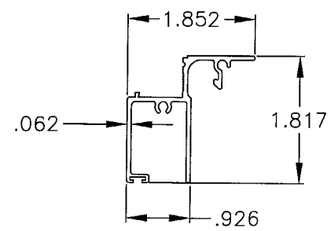

7 SASH BOTTOM RAIL EXTRUSION

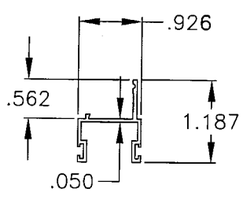

8 SASH SIDE RAIL EXTRUSION

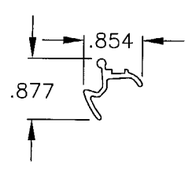

32 SASH RAIL BOTTOM LOCK

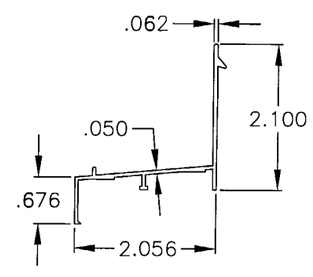

37 ALT. SILL EXTRUSION

E

ITEM	DESCRIPTION	PGT #	VENDOR	VENDOR #
1	FLANGED FRAME HEAD	62703	6063-T6	
2	FLANGED FRAME SILL	62751	6063-T6	
3	FLANGED FRAME JAMB	62705	6063-T6	
5	HEAVY DUTY FIXED MEETING RAIL	6534525	6063-T6	534525
6	SASH TOP RAIL	6534522	6063-T6	534522
7	SASH BOTTOM RAIL	6534523	6063-T6	534523
8	SASH SIDE RAIL	6534524	6063-T6	534524
9	SASH STOP	66387	6063-T6	AF-6387
10	SASH CAM INSERT (L.H. & R.H.)	42800	PGT	
11	#8 x .750 QUAD PAN HEAD SMS	7834PA	SPENCER OR =	
12	WEATHERSTRIP, VINYL BULB W/LEAF	6TP249	TEAM PLASTICS	TP-249
13	SWEEP LATCH	71096	MINIATURE DIE CASTING	PGT.214.XX
14	#8 x .625 PHILLIPS FLAT HEAD SMS	7858	SPENCER OR =	
15	BALANCE		CALDWELL	
16	WEATHERSTRIP, .187 x .270 FIN	61062	TEAM PLASTICS	FS7826-187
17	WEATHERSTRIP, .187 x .200, FIN	67919	SCHLEGEL	FS7919-187
18	BALANCE TAKE-OUT CLIP	7121UM	CALDWELL	
19	SILICON GLAZING SEALANT	62899	DOW, GE OR EQUAL	
23	3/16" ANNEALED GLASS			
24	3/16" TEMPERED GLASS			
25	3/16" GLAZING BEAD	65196	FLORIDA SCREEN OR =	05-196
26	#8 x 1.000 QUAD PAN HEAD SMS	781PQ	SPENCER OR =	
27	1" x 1.5" OPEN CELL FOAM PAD			
28	SCREEN ASSEMBLY			
32	SASH RAIL BOTTOM LOCK	62721	6063-T6	
33	SASH RAIL BOTTOM LOCK SPRING	7SPRNG	S. STL	
34	GLAZING BEAD, 1/2" I.G.	1253 TEAM PLASTICS		
35	1/2" I.G. GLASS (1/8 TEMPERED, 1/4" SPACE, 1/8" TEMPERED)			
36	1/2" I.G. GLASS (1/8" ANNEALED, 1/4" SPACE, 1/8" ANNEALED)			
37	FLANGED FRAME SILL	62751	6063-T6	

E

PRODUCT REVISED
as complying with the Florida Building Code
Acceptance No 04-0319.02
Expiration Date 10/08/06
By Miami Dade Product Control Division

10/21/04

Robert L. Clark, P.E.
PE #39712
Structural

PGT
Visibly Better

1070 TECHNOLOGY DRIVE
NOKOMIS, FL 34275

P.O. BOX 1529
NOKOMIS, FL 34274

Revsd By:	Date:	Revisions:
F.K.	5/24/04	E-ADD 37 & CORRECTIONS
F.K.	12/05/03	D-ADD ITEMS 34,35 & 36
Drawn By: F.K.	Date: 4/18/01	

Description: EXTRUSIONS AND PARTS LIST

Title: ALUM. SINGLE HUNG WINDOW W/ H.D. MTG. RAIL

Series/Model:	Scale:	Sheet:	Drawing No.	Rev:
SH-4000	NTS	4 of 6	2737	E

QUANTITY OF ANCHORS PER JAMB

WINDOW SIZE			COMPARATIVE ANALYSIS PRESSURE			
			FULL PSF		75 PSF MAX.	
Width	x	Height	1/4" Tapcon	#12 Screw	1/4" Tapcon	#12 Screw
26 1/2	x	26	2	2	2	2
26 1/2	x	35	2	2	2	2
26 1/2	x	38 3/8	4	4	4	4
26 1/2	x	50 5/8	4	4	4	4
26 1/2	x	56	4	4	4	4
26 1/2	x	63	4	4	4	4
26 1/2	x	76	4	4	4	4
32	x	26	2	2	2	2
32	x	35	2	2	2	2
32	x	38 3/8	4	4	4	4
32	x	50 5/8	4	4	4	4
32	x	56	4	4	4	4
32	x	63	4	4	4	4
32	x	76	4	4	4	4
37	x	26	2	2	2	2
37	x	35	2	4	2	2
37	x	38 3/8	4	4	4	4
37	x	50 5/8	4	4	4	4
37	x	56	4	4	4	4
37	x	63	4	6	4	4
37	x	76	4	4	4	4
40	x	26	2	2	2	2
40	x	35	2	4	2	2
40	x	38 3/8	4	4	4	4
40	x	50 5/8	4	4	4	4
40	x	56	4	4	4	4
40	x	63	4	6	4	4
40	x	76	4	4	4	4
48	x	26	2	4	2	2
48	x	35	4	4	2	4
48	x	38 3/8	4	4	4	4
48	x	50 5/8	4	6	4	4
48	x	56	4	6	4	4
48	x	63	4	6	4	4
48	x	76	4	6	4	6
53 1/8	x	26	2	4	2	2
53 1/8	x	35	4	4	2	4
53 1/8	x	38 3/8	4	4	4	4
53 1/8	x	50 5/8	4	6	4	4
53 1/8	x	56	4	6	4	4
53 1/8	x	63	4	6	4	4
53 1/8	x	76	4	6	4	6

MIAMI–DADE COUNTY ANCHORAGE SPACING:

1. ANCHORS ARE NOT REQUIRED IN THE HEAD OR SILL. REFERENCE TEST REPORT FTL–4253.
2. SPACING FOR (4) OR LESS ANCHORS PER JAMB: (DETAIL A)
   MAX. 9" FROM CORNERS
   MAX. 17" AT MEETING RAIL (DIMENSIONED FROM 8 1/2" BELOW MEETING RAIL)
3. SPACING FOR MORE THAN (4) ANCHORS PER JAMB: (DETAIL B)
   MAX. 9" FROM CORNERS
   MAX. 17" AT MEETING RAIL (DIMENSIONED FROM 8 1/2" BELOW MEETING RAIL)
   ONE ADDITIONAL ANCHOR REQUIRED ABOVE AND BELOW THE MEETING RAIL AT CENTERLINE BETWEEN THE CORNER AND MEETING RAIL ANCHORS.
4. WHEN INSTALLING OUTSIDE MIAMI–DADE COUNTY WITH 1/4" TAPCONS OR #12 SCREWS, SPACE ANCHORS PER NOTE 2 FOR FULL COMPARATIVE ANALYSIS PRESSURE.

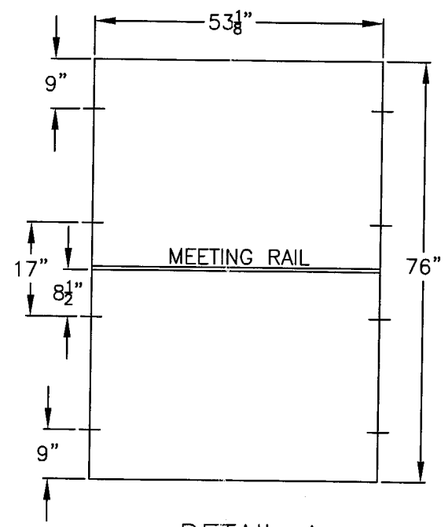

DETAIL A

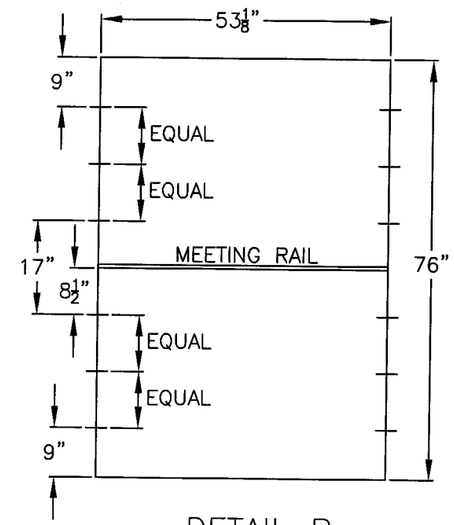

DETAIL B

PRODUCT REVISED
as complying with the Florida Building Code
Acceptance No 04-0319.02
Expiration Date 10/08/06
By
Miami Dade Product Control Division

10/21/04
Robert L. Clark, P.E.
PE #39712
Structural

PGT
Visibly Better

1070 TECHNOLOGY DRIVE
NOKOMIS, FL 34275

P.O. BOX 1529
NOKOMIS, FL 34274

Revsd By:	Date:	Revisions:
Revsd By: F.K.	Date: 5/24/04	Revisions: E- NEW SHEET
Drawn By: F.K.	Date: 4/18/01	

Description: ANCHORAGE SPACING

Title: ALUM. SINGLE HUNG WINDOW W/ H.D. MTG. RAIL

Series/Model:	Scale:	Sheet:	Drawing No.	Rev:
SH-4000	NTS	5 of 6	2737	E

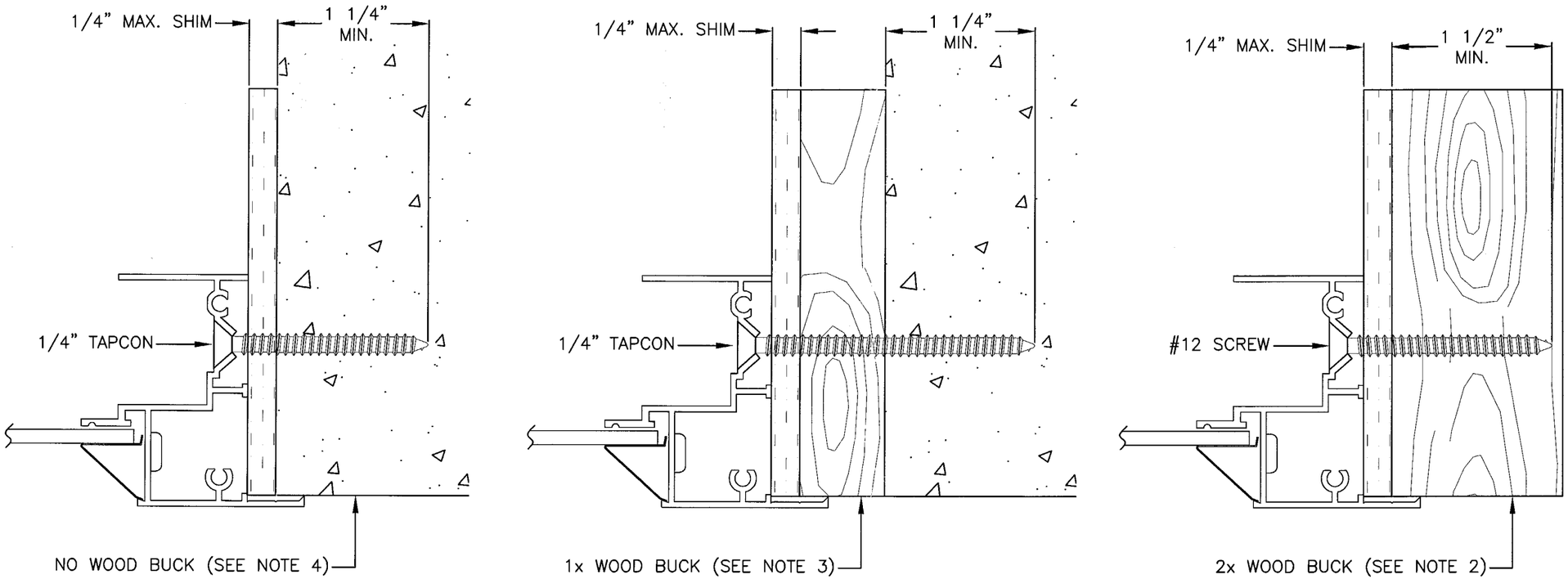

TYPICAL JAMB ANCHORAGE

PRODUCT REVISED
as complying with the Florida Buiding Code
Acceptance No 04-0319.02
Expiration Date 10/08/06
By
Miami Dade Product Control Division

NOTES: E

1. FOR CONCRETE APPLICATIONS IN MIAMI–DADE COUNTY, USE ONLY MIAMI–DADE COUNTY APPROVED ELCO TAPCONS.
2. INSTALLATION TO THE SUBSTRATE OF WOOD BUCKS 1 1/2" OR MORE THICK TO BE ENGINEERED BY OTHERS AND TO BE REVIEWED BY AUTHORITY HAVING JURISDICTION.
3. INSTALLATION TO THE SUBSTRATE OF WOOD BUCKS LESS THAN 1 1/2" THICK TO BE ENGINEERED BY OTHERS OR AS APPROVED BY AUTHORITY HAVING JURISDICTION.
4. WOOD BUCKS LESS THAN 1 1/2" THICK ARE OPTIONAL (PRODUCT MAY BE INSTALLED DIRECTLY TO CONCRETE).

10/21/04
Robert L. Clark, P.E.
PE #39712
Structural

PGT
Visibly Better

1070 TECHNOLOGY DRIVE
NOKOMIS, FL 34275

P.O. BOX 1529
NOKOMIS, FL 34274

Revsd By:	Date:	Revisions:
F.K.	5/24/04	E-UPDATE ANCHORAGE
F.K.	10/5/01	C-RENUMBERED
F.K.	12/05/03	D-UPDATED W/ NOTES
Drawn By: F.K.	Date: 4/18/01	

Description: ANCHORAGE DETAILS

Title: ALUM. SINGLE HUNG WINDOW W/ H.D. MTG. RAIL

Series/Model:	Scale:	Sheet:	Drawing No.	Rev:
SH-4000	NTS	6 of 6	2737	E