MIAMI-DADE

BUILDING CODE COMPLIANCE OFFICE (BCCO)
PRODUCT CONTROL DIVISION

MIAMI-DADE COUNTY, FLORIDA
METRO-DADE FLAGLER BUILDING
140 WEST FLAGLER STREET, SUITE 1603
MIAMI, FLORIDA 33130-1563
(305) 375-2901 FAX (305) 375-2908

NOTICE OF ACCEPTANCE (NOA)

Pella Corporation
102 Main Street
Pella, IA 50219

SCOPE:
This NOA is being issued under the applicable rules and regulations governing the use of construction materials. The documentation submitted has been reviewed by Miami-Dade County Product Control Division and accepted by the Board of Rules and Appeals (BORA) to be used in Miami Dade County and other areas where allowed by the Authority Having Jurisdiction (AHJ).

This NOA shall not be valid after the expiration date stated below. The Miami-Dade County Product Control Division (In Miami Dade County) and/or the AHJ (in areas other than Miami Dade County) reserve the right to have this product or material tested for quality assurance purposes. If this product or material fails to perform in the accepted manner, the manufacturer will incur the expense of such testing and the AHJ may immediately revoke, modify, or suspend the use of such product or material within their jurisdiction. BORA reserves the right to revoke this acceptance, if it is determined by Miami-Dade County Product Control Division that this product or material fails to meet the requirements of the applicable building code.

This product is approved as described herein, and has been designed to comply with the Florida Building Code, including the High Velocity Hurricane Zone.

DESCRIPTION: Aluminum Clad Wood Direct Set Impact-Window

APPROVAL DOCUMENT: Drawing No.**1287**, titled "Aluminum Clad Wood Direct Set Impact Window", sheets 1 through 2 of 2, prepared by W.W. Schaefer Engineering& Consultant, P.A., dated 12/20/03, signed and sealed by Warren W. Schaffer, P.E., bearing the Miami-Dade County Product Control Approval stamp with the Notice of Acceptance number and Approval date by the Miami-Dade County Product Control Division.

MISSILE IMPACT RATING: Large and Small Missile Impact

LABELING: Each unit shall bear a permanent label with the manufacturer's name or logo, city, state and following statement: "Miami-Dade County Product Control Approved", unless otherwise noted herein.
RENEWAL of this NOA shall be considered after a renewal application has been filed and there has been no change in the applicable building code negatively affecting the performance of this product.
TERMINATION of this NOA will occur after the expiration date or if there has been a revision or change in the materials, use, and/or manufacture of the product or process. Misuse of this NOA as an endorsement of any product, for sales, advertising or any other purposes shall automatically terminate this NOA. Failure to comply with any section of this NOA shall be cause for termination and removal of NOA.
ADVERTISEMENT: The NOA number preceded by the words Miami-Dade County, Florida, and followed by the expiration date may be displayed in advertising literature. If any portion of the NOA is displayed, then it shall be done in its entirety.
INSPECTION: A copy of this entire NOA shall be provided to the user by the manufacturer or its distributors and shall be available for inspection at the job site at the request of the Building Official.
This NOA consists of this page 1 and evidence page E-1, as well as approval document mentioned above.
The submitted documentation was reviewed by **Theodore Berman, P.E.**

6/4/2004

PRODUCT CONTROL ACCEPTED

NOA No 04-0322.11
Expiration Date: June 24, 2009
Approval Date: June 24, 2004

Pella Corporation

NOTICE OF ACCEPTANCE: EVIDENCE SUBMITTED

A. DRAWINGS

1. Manufacturer's die drawings and sections.
2. Drawing No.**1287**, titled "Aluminum Clad Wood Direct Set Impact Window", sheets 1 through 2 of 2, prepared by W.W. Schaefer Engineering& Consultant, P.A., dated 12/20/03, signed and sealed by Warren W. Schaffer, P.E.

B. TESTS

1. Test reports on 1) Air Infiltration Test, per FBC, TAS 202-94
   2) Uniform Static Air Pressure Test, Loading per FBC, TAS 202-94
   3) Water Resistance Test, per FBC, TAS 202-94
   4) Large Missile Impact Test per FBC, TAS 201-94
   5) Cyclic Wind Pressure Loading per FBC, TAS 203-94

   along with marked-up drawings and installation diagram of an Aluminum Clad Wood Direct Set Window, prepared by Stork Materials Technology Test Report No. **SMT-03-0303.09**, dated 12/15/03 signed and sealed by John D. Lee, P.E.

C. CALCULATIONS

1. Anchor Calculations, ASTM-E1300-98, and structural analysis, dated 02/24/04, prepared by W.W. Schaefer Engineering& Consultant, P.A., signed and sealed by Warren W. Schaffer, P.E.

D. QUALITY ASSURANCE

1. Miami Dade Building Code Compliance Office (BCCO).

E. MATERIAL CERTIFICATIONS

1. Notice of Acceptance No. **00-1212.04** issued to "E.I. DuPont DeNemours" for their "Dupont Butacite ® PVB" dated 02/15/01, expiring on 12/11/05.
2. Notice of Acceptance No. **01-1204.01** issued to "E.I. DuPont DeNemours" for their "Sentry ® Plus" dated 1/17/02, expiring on 1/14/07.

F. STATEMENTS

1. Statement letter of conformance, dated March 17, 2004, signed and sealed by Warren W. Schaefer, P.E.
2. Statement letter of no financial interest March 17, 2004, signed and sealed by Warren W. Schaefer, P.E.

G. OTHER

1. Letter from the consultant stating that the product is in compliance with the Florida Building Code (FBC)

Theodore Berman, P.E.
Deputy Director, Product Control Division
NOA No 04-0322.11
Expiration Date: June 24, 2009
Approval Date: June 24, 2004

APPROVED SHAPES

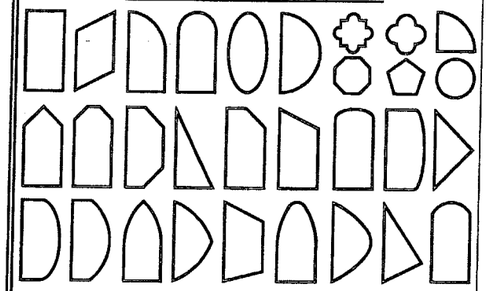

NOTES:

1. OTHER SHAPES MAY APPLY PROVIDING THEY ARE SIMILAR TO THOSE SHOWN & HAVE CORNER CONSTRUCTION PER CORNER DETAILS.
2. ALL UNITS MUST FIT INSCRIBED INTO THE ALLOWABLE LOAD TABLE DIMENSIONS (SEE SHEET 2) & BE GOVERNED BY THE ALLOWABLE PRESSURE OF THE RESPECTIVE UNIT SIZE IN THE LOAD TABLE.

ALLOWABLE DESIGN PRESSURE
SEE LOAD TABLE ON SHEET 2

GENERAL NOTES

1. THESE WINDOW SYSTEMS HAVE BEEN TESTED, ANALYZED AND APPROVED FOR DESIGN PRESSURES NOT TO EXCEED THOSE SHOWN IN THE "ALLOWABLE DESIGN LOADS" TABLE(S).
2. BUCKING, OPENINGS & BUCKING FASTENERS MUST BE PROPERLY DESIGNED & INSTALLED TO TRANSFER WIND LOADS TO THE STRUCTURE.
3. ALL HARDWARE & FASTENERS SHALL BE IN ACCORDANCE WITH THESE DRAWINGS & MAY NOT VARY UNLESS SPECIFICALLY MENTIONED ON THE DRAWINGS.
4. THE DETAILS & SPECIFICATIONS SHOWN HEREIN REPRESENT THE PRODUCTS TESTED & PROPOSED FOR WATER, AIR, IMPACT, CYCLIC & UNIFORM STATIC AIR PRESSURE TESTING IN CONFORMANCE WITH FLORIDA BUILDING CODE PROTOCOLS TAS-201, 202 & 203 FOR LARGE MISSILE IMPACT WINDOWS.
5. THESE WINDOW SYSTEMS HAVE BEEN DESIGNED IN ACCORDANCE WITH THE FLORIDA BUILDING CODE (FBC) FOR HIGH VELOCITY HURRICANE ZONES (HVHZ).
6. IMPACT SHUTTERS ARE NOT REQUIRED WITH THESE WINDOWS.
7. ALL ANCHORS SHALL BE INSTALLED AS SPECIFIED ON THESE DRAWINGS. SPECIFIED EMBEDMENT TO BASE MATERIAL SHALL BE BEYOND WALL FINISH OR STUCCO.

FRAME ANCHOR REQUIREMENTS TABLE			
OPENING TYPE (SUBSTRATE)	JAMB TO OPENING FASTENER TYPE	MINIMUM EMBED	MINIMUM EDGE DIST.
2X_ WOOD FRAME OR BUCK	NO. 10 SMS SCREW	1 1/4"	3/4"
CMU/CONCRETE	(1) 3/16" CONCRETE SCREW	1 1/4"	2"
(1) CONCRETE SCREWS SHALL BE ELCO OR ITW RAMSET/RED HEAD TAPCONS, HILTI KWIK-CON II OR POWERS RAWL TAPPER (HARDENED STEEL OR S.S.).			

* ANCHOR NOTE: FRAME MAY BE EITHER DIRECT MOUNTED TO THE OPENING, MOUNTED ONTO A CONTINUOUS WOOD SPACER, OR ANCHORED TO A MIN. 2x4 NO. 3 SOUTHERN PINE WOOD BUCK. WHEN ANCHORED TO A 2x4 BUCK, NO. 10 SHEAR SCREWS SHALL BE USED. WHEN DIRECT MOUNTED OR MOUNTED WITH SPACER, 3/16" CONCRETE SCREW SHALL BE USED. SEE "ANCHOR REQUIREMENTS TABLE" FOR EMBED REQUIREMENTS.

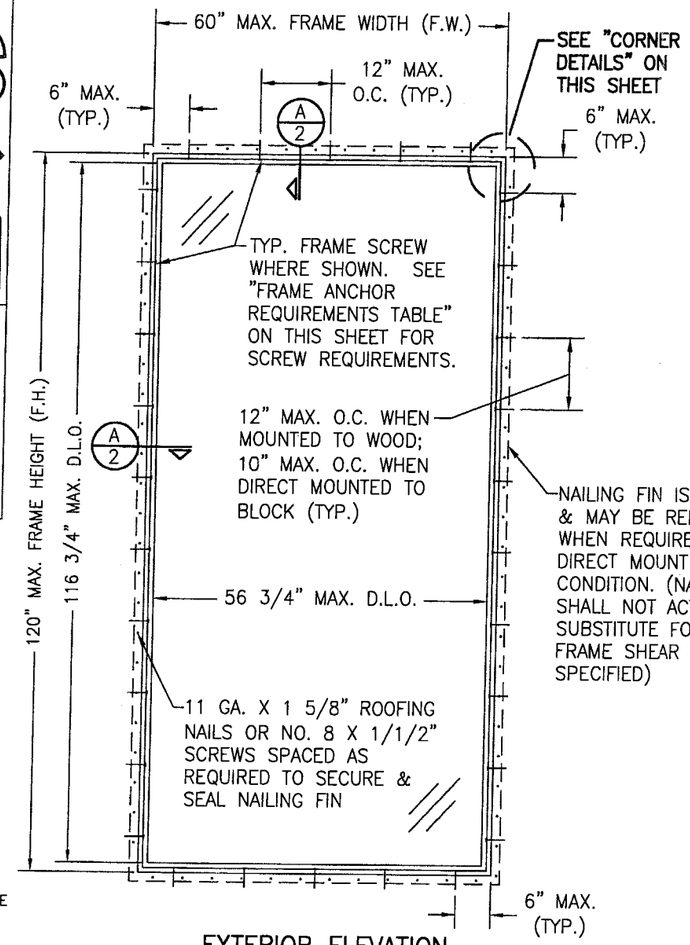

EXTERIOR ELEVATION
RECTANGULAR WINDOW
SCALE: 1/2"=1'-0"

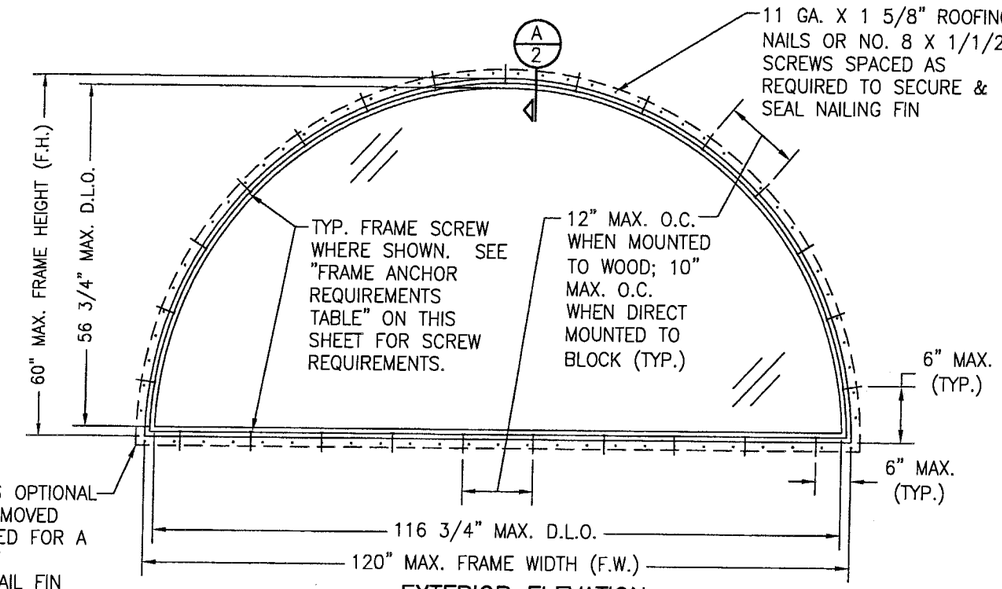

EXTERIOR ELEVATION
HALF ROUND WINDOW
SCALE: 1/2"=1'-0"

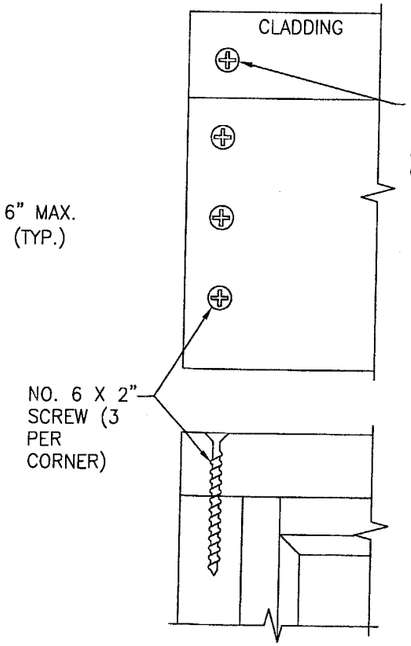

CORNER DETAIL FOR 90° CORNERS (INTERIOR ELEVATION)
NOT TO SCALE

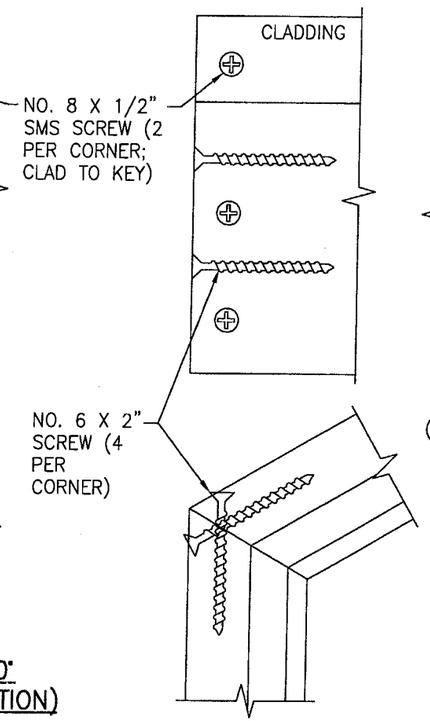

CORNER DETAIL FOR MITERED CORNERS (INTERIOR ELEVATION)
NOT TO SCALE

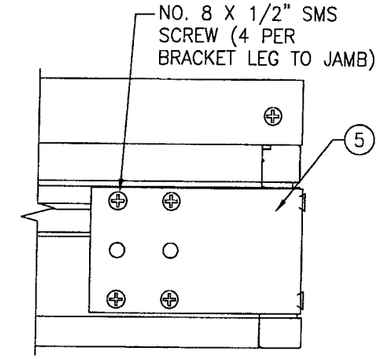

CORNER BRACKET DETAIL
NOT TO SCALE
(ONLY REQUIRED WITH WINDOWS OF SIZE 36 SQUARE FEET & LARGER)

Approved as complying with the Florida Building Code
Date 06/24/04
NOA# 04-0322.11
Miami Dade Product Control Division
By

DRAWN BY: K.P.S.	CHECKED BY: W.W.S.
PLOT: 1=24	DATE: 12/20/03

NO.	REVISION DESCRIPTION	BY	DATE

DRAWING TITLE: ALUMINUM CLAD WOOD DIRECT SET IMPACT WINDOWS

MANUFACTURER: PELLA CORPORATION, 102 MAIN STREET, PELLA, IA 50219, 641-621-1000

CONSULTANTS: W. W. SCHAEFER ENGINEERING & CONSULTING, P.A.
8895 N. MILITARY TRAIL; SUITE C-204
PALM BEACH GARDENS, FL 33410
PHONE: 561-775-4902 FAX: 561-775-4903

CERTIFICATION
MAY 19 2004
WARREN W. SCHAEFER, P.E.
F.L. NO. 44135

DRAWING NO. 1287 REV.

SHEET NO. 1 OF 2

BILL OF MATERIALS

ITEM #	ITEM DESCRIPTION	MANUFACTURER/NOTES
	PARTS	
1	JAMB	* WOOD
2	GLAZING STOP	* WOOD
3	JAMB CLADDING	6063–T6 ALUMINUM
4	NAIL FIN	.0235" ALUMINUM
5	CORNER BRACKET	MIN. 33 ksi GALV. METAL
	SEALS & SEALANTS	
8	BULB GASKET	PVC
	MISCELLANEOUS FASTENERS	
10	1/4" X 1 1/8" 18 GA STAPLE	WITHIN 2" – 4" OF CORNERS & 6" O.C.

* WOOD USED WITH TEST UNITS WAS PONDEROSA PINE. ALTERNATE WOOD SPECIES TO BE APPLICABLE WITH THESE WINDOWS IS MIN. GRADE 2 MAHOGANY, SOUTHERN PINE, OAK, CHERRY, MAPLE, DOUGLAS FIR & CYPRESS.

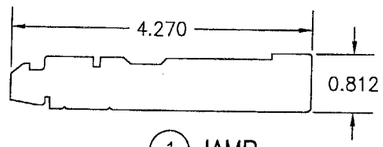

1 JAMB

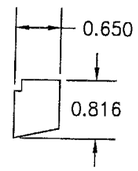

2 GLAZING STOP

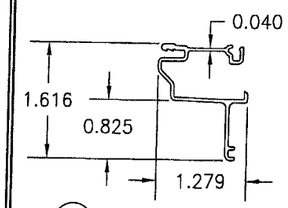

3 JAMB CLADDING

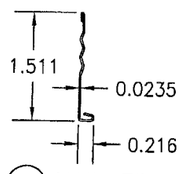

4 NAIL FIN

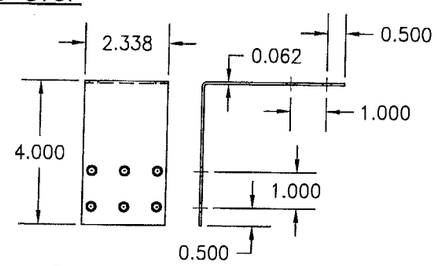

5 CORNER BRACKET

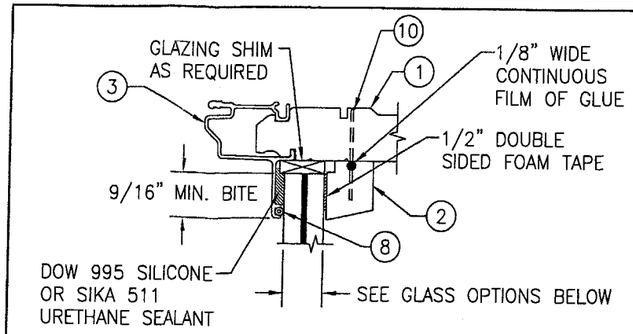

GLAZING DETAIL

GLASS OPTION 1. 9/16" THICK DUPONT SENTRY GLASS PLUS LAMINATED GLASS (1/4" AN/0.09" SGP/1/4" AN)

GLASS OPTION 2. 9/16" THICK DUPONT SENTRY GLASS PLUS LAMINATED GLASS (1/4" HT. ST./0.09" SGP/1/4" HT. ST.)

GLASS OPTION 3. 7/16" THICK DUPONT BUTACITE PVB LAMINATED GLASS (3/16" AN/0.09" PVB/3/16" AN)

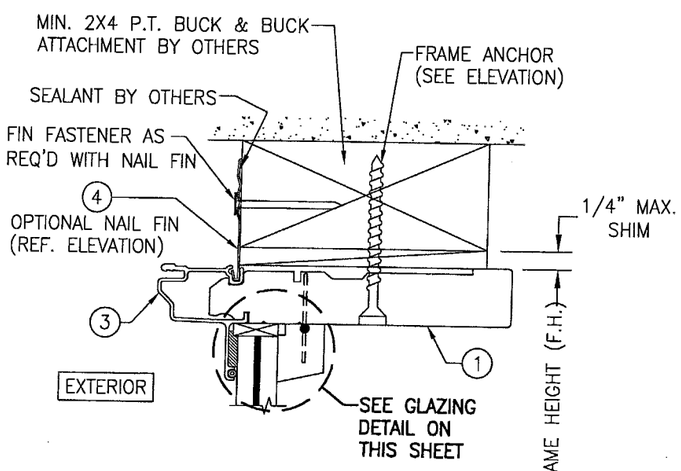

SECTION A/2

SCALE: 1/2 FULL

HEAD SECTION SHOWN; SIDES & SILL SIMILAR

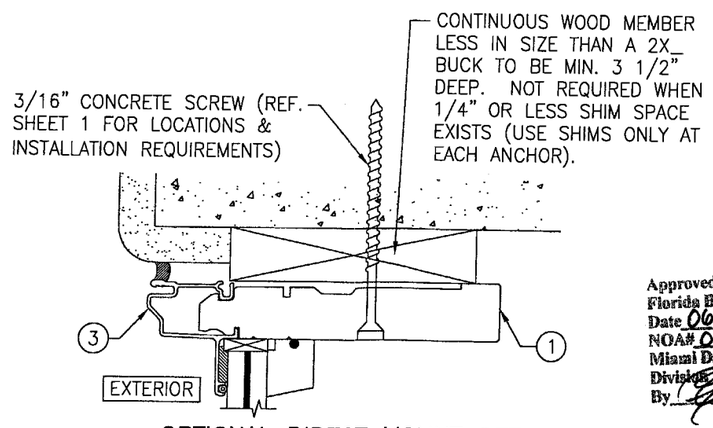

OPTIONAL DIRECT MOUNT DETAIL

FOR DETAIL NOT SHOWN, SEE OTHER SECTIONS (HEAD SECTION SHOWN, SIDES AND SILL SIMILAR)

Approved as complying with the Florida Building Code
Date 06/24/04
NOA# 04-0322.11
Miami Dade Product Control Division
By

LOAD TABLE

WINDOW FRAME DIMENSION		ALLOWABLE DESIGN PRESSURE (PSF)					
		GLASS OPTION 1		GLASS OPTION 2		GLASS OPTION 3	
MAX. SHORT SIDE (IN.)	MAX. LONG SIDE (IN.)	POS	NEG	POS	NEG	POS	NEG
60	120	37.9	37.9	75.0	75.0	N/A	N/A
	108	41.4	41.4	75.0	75.0	N/A	N/A
	96	45.9	45.9	75.0	75.0	N/A	N/A
	90	49.2	49.2	75.0	75.0	N/A	N/A
	84	53.0	53.0	75.0	75.0	N/A	N/A
	78	57.2	57.2	75.0	75.0	N/A	N/A
	72	61.7	61.7	75.0	85.0	N/A	N/A
	66	68.0	68.0	75.0	85.0	N/A	N/A
	60	75.0	75.0	75.0	85.0	N/A	N/A
54	120	45.0	45.0	75.0	75.0	N/A	N/A
	108	48.5	48.5	75.0	75.0	N/A	N/A
	96	53.9	53.9	75.0	75.0	N/A	N/A
	90	56.9	56.9	75.0	75.0	N/A	N/A
	84	60.4	60.4	75.0	85.0	N/A	N/A
	78	64.7	64.7	75.0	85.0	N/A	N/A
	72	70.7	70.7	75.0	85.0	N/A	N/A
	66	75.0	75.0	75.0	85.0	N/A	N/A
	60	75.0	75.0	75.0	85.0	N/A	N/A
	54	75.0	75.0	75.0	85.0	60.0	60.0
48	120	56.3	56.3	75.0	75.0	N/A	N/A
	108	59.5	59.5	75.0	75.0	N/A	N/A
	96	64.0	64.0	75.0	85.0	N/A	N/A
	90	67.5	67.5	75.0	85.0	N/A	N/A
	84	71.5	71.5	75.0	85.0	N/A	N/A
	78	75.0	75.0	75.0	85.0	N/A	N/A
	72	75.0	75.0	75.0	85.0	N/A	N/A
	66	75.0	75.0	75.0	85.0	N/A	N/A
	60	75.0	75.0	75.0	85.0	59.2	59.2
	54	75.0	75.0	75.0	85.0	60.0	60.0
42	120	72.6	72.6	75.0	75.0	N/A	N/A
	108	75.0	75.0	75.0	85.0	N/A	N/A
	96	75.0	75.0	75.0	85.0	N/A	N/A
	90	75.0	75.0	75.0	85.0	N/A	N/A
	84	75.0	75.0	75.0	85.0	N/A	N/A
	78	75.0	75.0	75.0	85.0	N/A	N/A
	72	75.0	75.0	75.0	85.0	58.6	58.6
	66	75.0	75.0	75.0	85.0	60.0	60.0
36	120	75.0	75.0	75.0	85.0	N/A	N/A
	108	75.0	75.0	75.0	85.0	N/A	N/A
	96	75.0	75.0	75.0	85.0	N/A	N/A
	90	75.0	75.0	75.0	85.0	N/A	N/A
	84	75.0	75.0	75.0	85.0	60.0	60.0

N/A = SIZE IS "NOT APPLICABLE" TO THE RESPECTIVE GLASS OPTION & MAY NOT BE USED.

NOTE: THE PRESSURES IN THIS TABLE ARE RESTRICTED BY ASTM E1300–98 GLASS LOADS. WHERE ASTM E1300–00 APPLIES, THOSE PRESSURES RESTRICTED BY E1300–98 MAY BE EVALUATED BY A FLORIDA CERTIFIED ENGINEER AND CERTIFIED TO THE ALLOWABLE LOADS OF E1300–00 PROVIDING THEY DO NOT EXCEED THE TESTED DESIGN LOADS.

DRAWN BY: K.P.S.	CHECKED BY: W.W.S.
PLOT: 1=2	DATE: 12/20/03

NO.	REVISION DESCRIPTION	BY	DATE

DRAWING TITLE: ALUMINUM CLAD WOOD DIRECT SET IMPACT WINDOWS

MANUFACTURER: PELLA CORPORATION, 102 MAIN STREET, PELLA, IA 50219, 641–621–1000

CONSULTANTS: W. W. SCHAEFER ENGINEERING & CONSULTING, P.A.
8895 N. MILITARY TRAIL; SUITE C–204
PALM BEACH GARDENS, FL 33410
PHONE: 561–775–4902 FAX: 561–775–4903

CERTIFICATION: MAY 19 2004

WARREN W. SCHAEFER, P.E. P.E. NO. 44135

DRAWING NO. 1287 REV.

SHEET NO. 2 OF 2