MIAMI-DADE

BUILDING CODE COMPLIANCE OFFICE (BCCO)
PRODUCT CONTROL DIVISION

MIAMI-DADE COUNTY, FLORIDA
METRO-DADE FLAGLER BUILDING
140 WEST FLAGLER STREET, SUITE 1603
MIAMI, FLORIDA 33130-1563
(305) 375-2901 FAX (305) 375-2908

NOTICE OF ACCEPTANCE (NOA)

Protective Glass Products, Inc.
4851 SW 75th Ave.
Miami, FL 33155

SCOPE:
This NOA is being issued under the applicable rules and regulations governing the use of construction materials. The documentation submitted has been reviewed by Miami-Dade County Product Control Division and accepted by the Board of Rules and Appeals (BORA) to be used in Miami Dade County and other areas where allowed by the Authority Having Jurisdiction (AHJ).

This NOA shall not be valid after the expiration date stated below. The Miami-Dade County Product Control Division (In Miami Dade County) and/or the AHJ (in areas other than Miami Dade County) reserve the right to have this product or material tested for quality assurance purposes. If this product or material fails to perform in the accepted manner, the manufacturer will incur the expense of such testing and the AHJ may immediately revoke, modify, or suspend the use of such product or material within their jurisdiction. BORA reserves the right to revoke this acceptance, if it is determined by Miami-Dade County Product Control Division that this product or material fails to meet the requirements of the applicable building code.

This product is approved as described herein, and has been designed to comply with the Florida Building Code, including the High Velocity Hurricane Zone.

DESCRIPTION: Series PGPS-500 Aluminum Storefront System - Large Missile Impact

APPROVAL DOCUMENT: Drawing No. **PGPS-501**, titled "Series PGPS-500 L.M. Impact Store Front" Sheets 1 through 6 of 6, dated 03/13/04, prepared by Jose A. Martinez, P.E. Civil & Structural Engineers, signed and sealed by Jose A. Martinez, P.E., bearing the Miami-Dade County Product Control Approval stamp with the Notice of Acceptance number and approval date by the Miami-Dade County Product Control Division.

MISSILE IMPACT RATING: Large and Small Missile Impact

LABELING: Each unit shall bear a permanent label with the manufacturer's name or logo, city, state and following statement: "Miami-Dade County Product Control Approved", unless otherwise noted herein.

RENEWAL of this NOA shall be considered after a renewal application has been filed and there has been no change in the applicable building code negatively affecting the performance of this product.

TERMINATION of this NOA will occur after the expiration date or if there has been a revision or change in the materials, use, and/or manufacture of the product or process. Misuse of this NOA as an endorsement of any product, for sales, advertising or any other purposes shall automatically terminate this NOA. Failure to comply with any section of this NOA shall be cause for termination and removal of NOA.

ADVERTISEMENT: The NOA number preceded by the words Miami-Dade County, Florida, and followed by the expiration date may be displayed in advertising literature. If any portion of the NOA is displayed, then it shall be done in its entirety.

INSPECTION: A copy of this entire NOA shall be provided to the user by the manufacturer or its distributors and shall be available for inspection at the job site at the request of the Building Official.
This NOA consists of this page 1and evidence pages E-1 and E-2, as well as approval document mentioned above.
The submitted documentation was reviewed by **Manuel Perez, P.E.**

PRODUCT CONTROL ACCEPTED

Protective Glass Products, Inc..

NOTICE OF ACCEPTANCE: EVIDENCE SUBMITTED

A. DRAWINGS

1. Manufacturer's die drawings and sections.
2. Drawing No. **PGPS-501**, titled "Series PGPS-500 L.M. Impact Store Front" Sheets 1 thru 6 of 6, dated 03/13/04, prepared by Jose A. Martinez, P. E. Civil & Structural Engineers, signed and sealed by Jose A. Martinez, P. E.

B. TESTS

1. Test reports on 1) Air Infiltration Test, per FBC, TAS 202-94
   2) Uniform Static Air Pressure Test, Loading per FBC, TAS 202-94
   3) Water Resistance Test, per FBC, TAS 202-94
   along with installation diagram of aluminum store front system, marked-up by Hurricane Engineering & Testing Inc., Test Report No. **HETI-04-1374,** dated 03/14/04, signed & sealed by Rafael E. Droz-Seda, P. E
2. Test reports on 1) Large Missile Impact Test, FBC, TAS 201-94
   2) Cyclic Loading Test, per FBC, TAS 203-94
   along with installation diagram of aluminum store front system, marked-up by Hurricane Engineering & Testing Inc., Test Report No. **HETI-04-1894,** dated 03/14/04, signed & sealed by Rafael E. Droz-Seda, P. E
3. Test reports on 1) Large Missile Impact Test, FBC, TAS 201-94
   2) Cyclic Loading Test, per FBC, TAS 203-94
   along with installation diagram of aluminum store front system, marked-up by Hurricane Engineering & Testing Inc., Test Report No. **HETI-04-1893A,** dated 03/14/04, signed & sealed by Rafael E. Droz-Seda, P. E
4. Test reports on 1) Large Missile Impact Test, FBC, TAS 201-94
   2) Cyclic Loading Test, per FBC, TAS 203-94
   along with installation diagram of aluminum store front system, marked-up by Hurricane Engineering & Testing Inc., Test Report No. **HETI-04-1893B,** dated 03/14/04, signed & sealed by Rafael E. Droz-Seda, P. E
5. Test reports on 1) Air Infiltration Test, per FBC, TAS 202-94
   2) Uniform Static Air Pressure Test, Loading per FBC, TAS 202-94
   3) Water Resistance Test, per FBC, TAS 202-94
   along with installation diagram of aluminum store front system, marked-up by Hurricane Engineering & Testing Inc., Test Report No. **HETI-04-1375,** dated 03/14/04, signed & sealed by Rafael E. Droz-Seda, P. E
6. Tensile Test prepared by Hurricane Engineering & Testing, Inc. Test Report No. **HETI-04-T112**, dated 03/16/04, tested per ASTM E-8-01e1, signed and sealed by Rafael E. Droz-Seda, P.E.

Manuel Perez, P.E.
Product Control Examiner
NOA No 04-0323.01
Expiration Date: June 17, 2009
Approval Date: June 17, 2004

Protective Glass Products, Inc.

NOTICE OF ACCEPTANCE: EVIDENCE SUBMITTED

C. CALCULATIONS:

1. Anchor Calculations, ASTME-1300, structural analysis, dated 03/18/04, prepared, signed and sealed by Jose A. Martinez, P. E.

D. QUALITY ASSURANCE:

1. Miami-Dade County Code Compliance Office (BCCO)

E. MATERIAL CERTIFICATIONS

1. Notice of Acceptance No. **03-0421.01** issued to" Solutia Inc." for "Saflex HP ", expiring on 04/14/08.
2. Notice of Acceptance No. **01-1204.01** issued to "E. I. Depont DeNemours" for "Sentry ® Plus", expiring on 01/14/07.
3. Notice of Acceptance No. **03-0514.15** issued to "Oldcastle Glass Inc." for "Storm Glass", expiring on 12/11/08.

F. STATEMENTS

1. Statement letter of conformance, dated May 25, 2004, signed and sealed by Jose A. Martinez, P.E.
2. Statement letter of no financial interest, dated May 25, 2004, signed and sealed by Jose A. Martinez, P.E.

G. OTHER

1. Letter from the consultant stating that the product is in compliance with the Florida Building Code (FBC).

Manuel Perez, P.E.
Product Control Examiner
NOA No 04-0323.01
Expiration Date: June 17, 2009
Approval Date: June 17, 2004

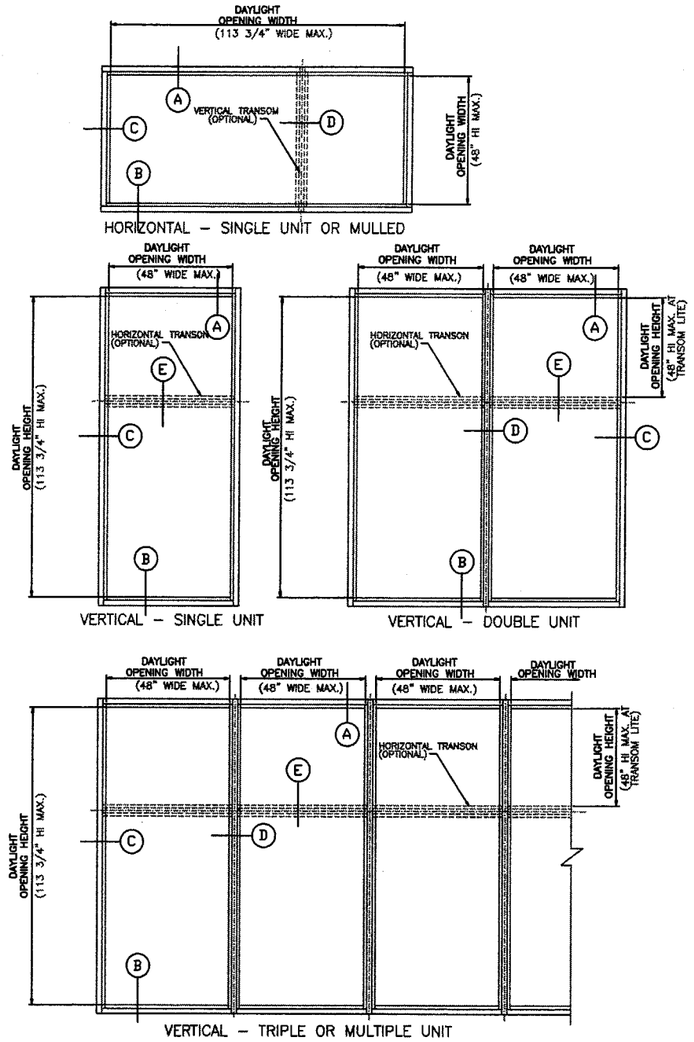

APPROVED ELEVATIONS

*(WITH / WITHOUT MULLION OR TRANSOM)

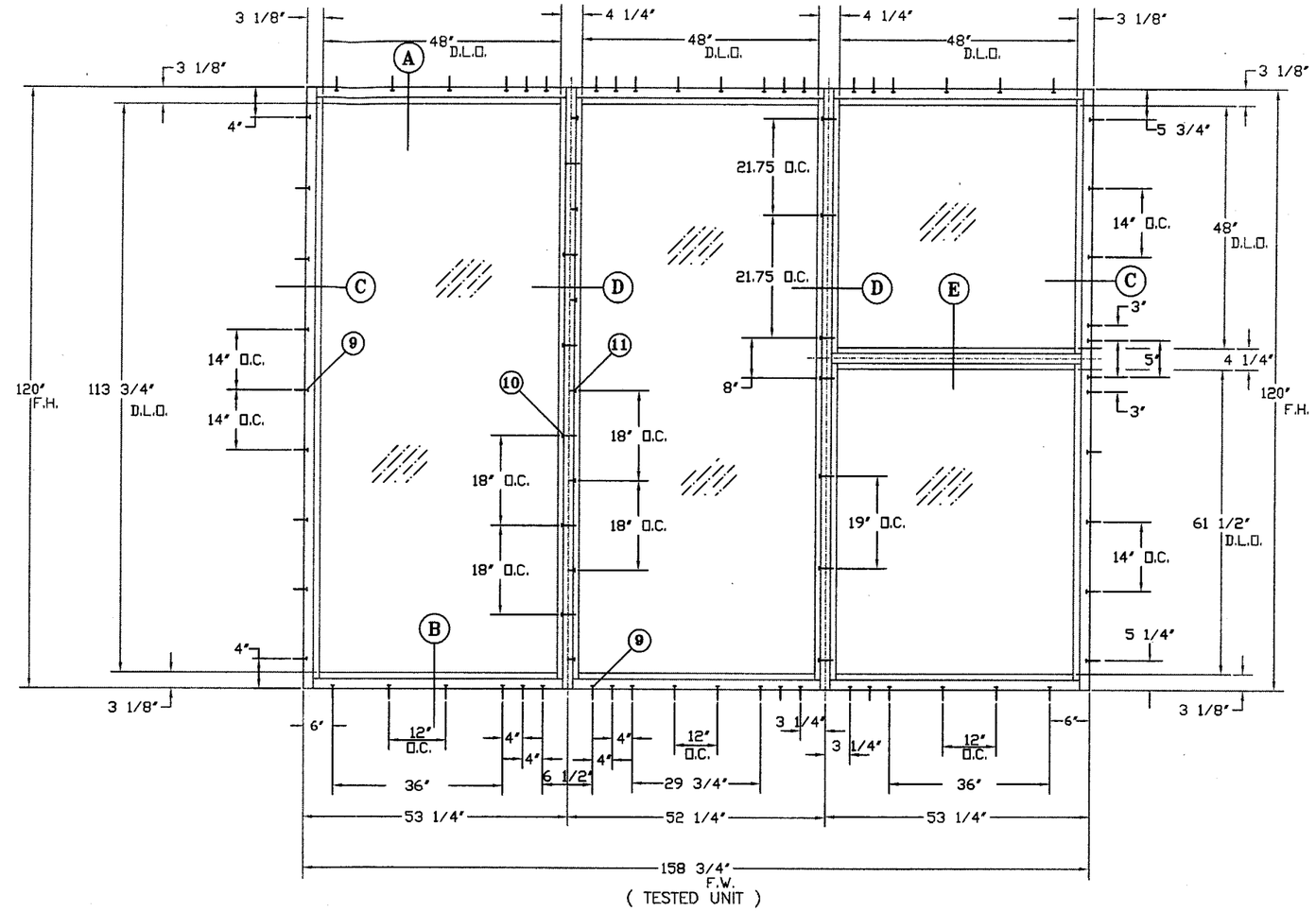

(TESTED UNIT)

STORE FRONT ELEVATION

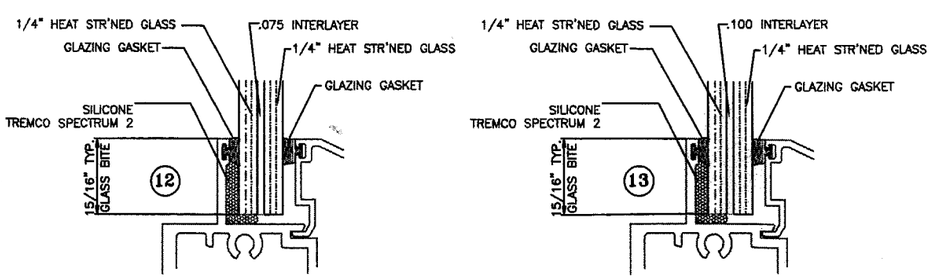

GLASS TYPE 'A'
OLDCASTLE "STORMGLASS"
OVERALL THICKNESS = 0.523"

GLASS TYPE 'B'
SAFLEX / SOLUTIA "HP"
OVERALL THICKNESS = 0.544"

GLAZING OPTIONS
LARGE MISSILE IMPACT RESISTANT GLASS, SHUTTERS ARE NOT REQUIRED

TEST UNIT PERFORMANCE DATA:

BASED ON HETI #04-1374, #04-1893A & #04-1893B
TEST SIZE = 158 3/4" wide x 120" hi
D.L.O. SIZE = 48" wide x 113 3/4" hi
STRUCTURAL TEST LOADS = +139.5, -139.5 PSF
DESIGN LOADS @ TAS-202 = +93.0, -93.0 PSF
DESIGN LOADS @ TAS-203 = +93.0, -93.0 PSF
WATER TEST LOAD = +15.00 PSF (HETI-04-1374)
TESTED GLASS = 1/2" HEATSTREGTHENED GLASS

DESIGN LOAD RATING – PSF SHUTTERS NOT REQUIRED			
WITHOUT TRANSOM		WITH TRANSOM	
EXT. (+)	INT. (-)	EXT. (+)	INT. (-)
93.0	93.0	93.0	93.0

NOTES:

THIS PRODUCT IS DESIGNED AS PER THE 2001 FLORIDA BUILDING CODE. ALSO FOR WIND LOADS AS PER ASCE 7 USING CORRESPONDING LOADS.

P.T. WOOD BUCKS BY OTHERS, MUST BE ANCHORED PROPERLY TO TRANSFER LOADS TO THE STRUCTURE.

ANCHORS SHALL BE AS NOTED, SPACED AS SHOWN ON DETAILS. ANCHOR EMBEDMENT TO BASE MATERIAL SHALL BE BEYOND WALL DRESSING OR STUCCO.

ANCHORING OR LOADING CONDITIONS NOT SHOWN IN THESE DETAILS ARE NOT PART OF THIS APPROVAL.

JOSE A. MARTINEZ, P.E.
LICENSE NO: PE 0031509
5/25/04

Approved as complying with the Florida Buiding Code
Date JUNE 17, 2004
NOA# 04.0323.01
Miami Dade Product Control Division
By

Engineering: JOSE A. MARTINEZ, P.E.
CIVIL & STRUCTURAL ENGINEERS
(305) 887-4417
24 East 5th Street, Hialeah, Florida 33010

Drawing Name: TEST UNIT ELEVATION, GLAZING DETAILS & NOTES

PROTECTIVE GLASS PRODUCTS INC.
4851 S.W. 75 AVE.
MIAMI, FL. 33155
TEL. (305) 266-7594 FAX. (305) 266-7596

PGPS-500 L.M. IMPACT STORE FRONT

DATE 03-13-04
DRAWN N. E.
CHECK
SCALE 1/2" = 1"

Drawing Number: PGPS-501
Sheet: 1 of 6

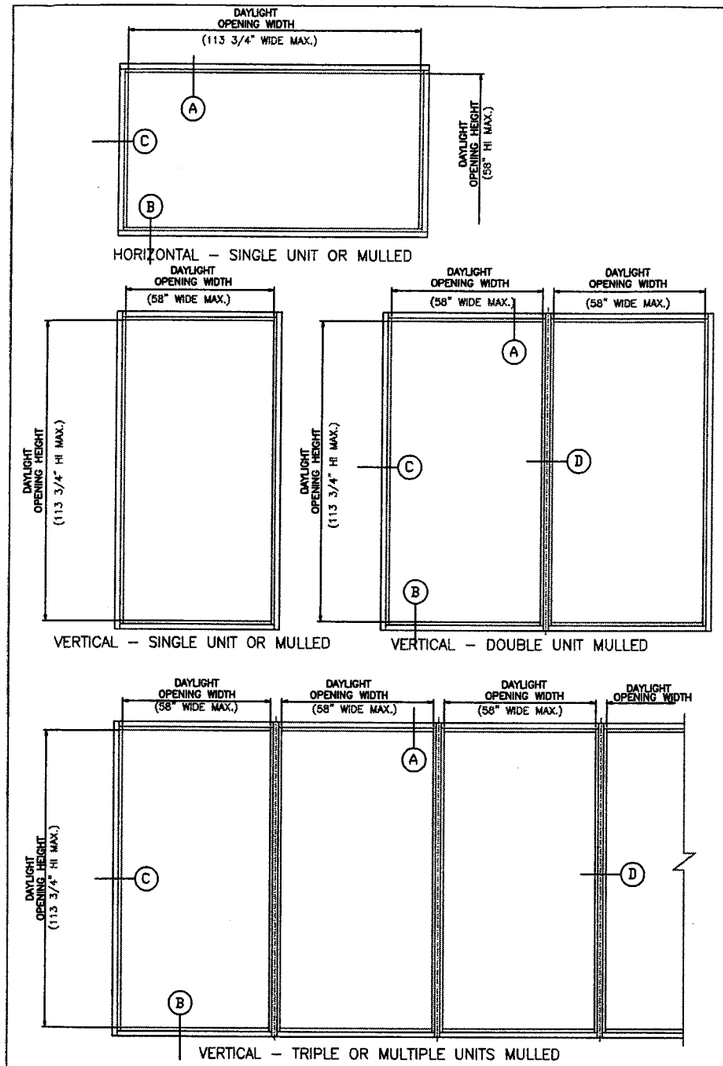

APPROVED ELEVATIONS

*(WITH MULLION & WITHOUT TRANSOM)

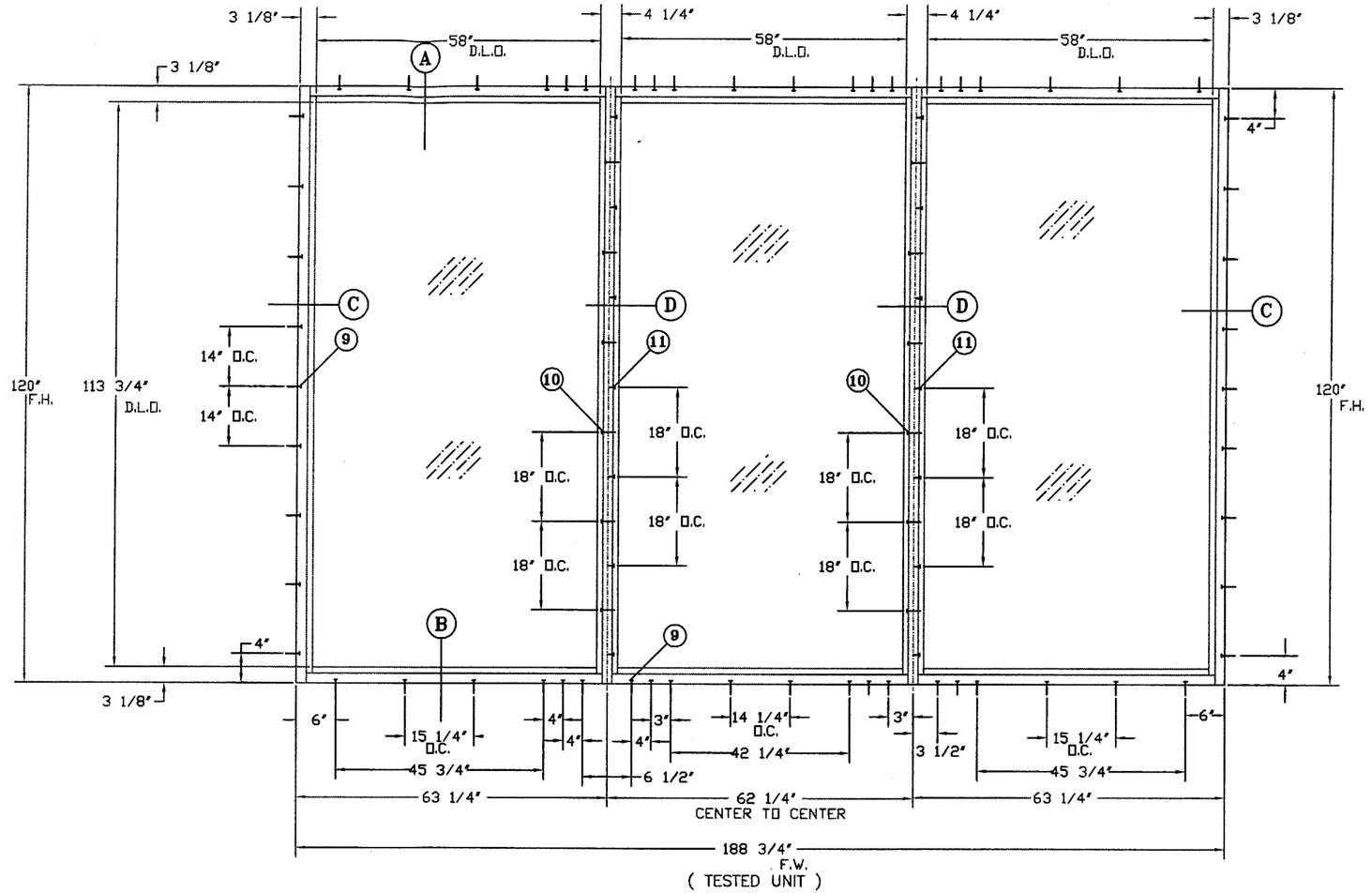

STORE FRONT ELEVATION

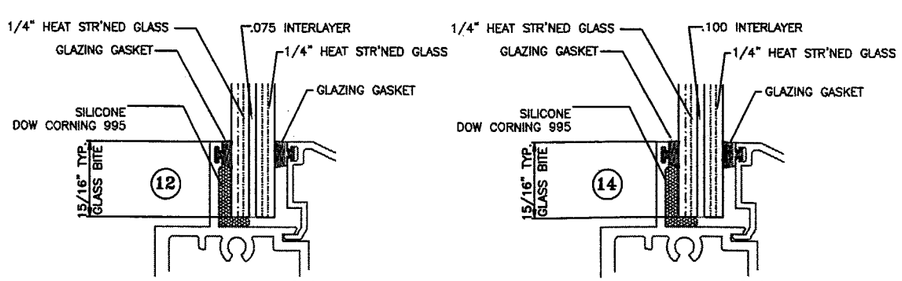

GLASS TYPE 'A'
OLDCASTLE "STORMGLASS"
OVERALL THICKNESS = 0.523"

GLASS TYPE 'C'
DUPONT – SENTRY GLASS PLUS
OVERALL THICKNESS = 0.544"

GLAZING OPTIONS
LARGE MISSILE IMPACT RESISTANT GLASS, SHUTTERS ARE NOT REQUIRED

TEST UNIT PERFORMANCE DATA:

BASED ON HETI–04–1375 & 04–1894
TEST SIZE = 188 3/4" wide x 120" hi
D.L.O. SIZE = 58" wide x 113 3/4" hi
STRUCTURAL TEST LOADS = +120.0, –120.0 PSF
DESIGN LOADS @ TAS–202 = +80.0, –80.0 PSF
DESIGN LOADS @ TAS–203 = +80.0, –80.0 PSF
WATER TEST LOAD = +15.00 PSF (HETI–04–1374)
TESTED GLASS = 1/2" HEATSTREGTHENED GLASS

DESIGN LOAD RATING – PSF SHUTTERS NOT REQUIRED	
WITHOUT TRANSOM	
EXT. (+)	INT. (–)
80.0	80.0

NOTES:

THIS PRODUCT IS DESIGNED AS PER THE 2001 FLORIDA BUILDING CODE. ALSO FOR WIND LOADS AS PER ASCE 7 USING CORRESPONDING LOADS.

P.T. WOOD BUCKS BY OTHERS, MUST BE ANCHORED PROPERLY TO TRANSFER LOADS TO THE STRUCTURE.

ANCHORS SHALL BE AS NOTED, SPACED AS SHOWN ON DETAILS. ANCHOR EMBEDMENT TO BASE MATERIAL SHALL BE BEYOND WALL DRESSING OR STUCCO.

ANCHORING OR LOADING CONDITIONS NOT SHOWN IN THESE DETAILS ARE NOT PART OF THIS APPROVAL.

JOSE A. MARTINEZ, P.E.
LICENSE NO: PE 0031509

5/25/04

Approved as complying with the Florida Building Code
Date JUNE 17, 2004
NOA# 04-0323.01
Miami Dade Product Control Division
By Manuel Perez

Engineering: JOSE A. MARTINEZ, P.E.
CIVIL & STRUCTURAL ENGINEERS
(305) 887–4417
24 East 5th Street, Hialeah, Florida 33010

Drawing Name TEST UNIT ELEVATION, GLAZING DETAILS & NOTES

PROTECTIVE GLASS PRODUCTS INC.
4851 S.W. 75 AVE.
MIAMI, FL. 33155
TEL (305) 266–7594 FAX. (305) 266–7596

PGPS–500 L.M. IMPACT STORE FRONT

DATE 03-13-04
DRAWN N. E.
CHECK
SCALE 1/2" = 1"

Drawing Number: PGPS–501
Sheet: 2 of 6

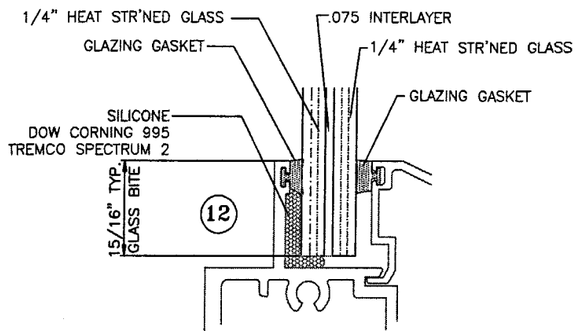

GLASS TYPE 'A'

OLDCASTLE "STORMGLASS"
OVERALL THICKNESS = 0.523"

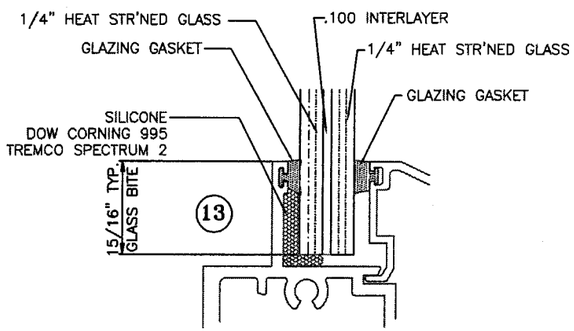

GLASS TYPE 'B'

SAFLEX / SOLUTIA "HP"
OVERALL THICKNESS = 0.544"

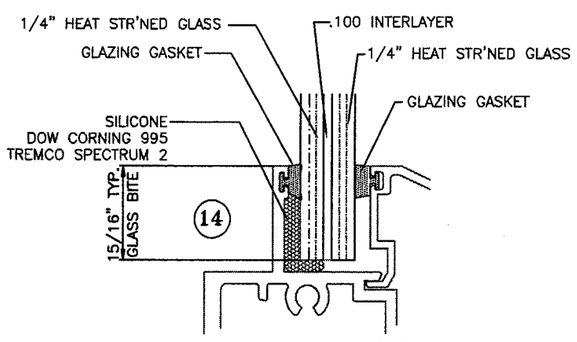

GLASS TYPE 'C'

DUPONT – SENTRY GLASS PLUS
OVERALL THICKNESS = 0.544"

GLAZING OPTIONS

DESIGN LOAD CAPACITY – PSF (SINGLE, DOUBLE, TRIPLE OR MULTIPLE UNITS)

SINGLE LITE FRAME DIMS.		GLASS D.L.O.		JA	GLASS TYPE 'A' 1/4" TAPCONS		GLASS TYPE 'B' 1/4" TAPCONS		GLASS TYPE 'C' 1/4" TAPCONS	
WIDTH	HEIGHT	WIDTH	HEIGHT		EXT.(+)	INT.(–)	EXT.(+)	INT.(–)	EXT.(+)	INT.(–)
30 1/4"	36"	24"	29 3/4"	3	93.0	93.0	93.0	93.0	80.0	80.0
34 1/4"		28"		3	93.0	93.0	93.0	93.0	80.0	80.0
38 1/4"		32"		3	93.0	93.0	93.0	93.0	80.0	80.0
42 1/4"		36"		3	93.0	93.0	93.0	93.0	80.0	80.0
46 1/4"		40"		3	93.0	93.0	93.0	93.0	80.0	80.0
50 1/4"		44"		3	93.0	93.0	93.0	93.0	80.0	80.0
54 1/4"		48"		3	93.0	93.0	93.0	93.0	80.0	80.0
58 1/4"		52"		3	93.0	93.0	93.0	93.0	80.0	80.0
60 1/4"		54"		3	93.0	93.0	93.0	93.0	80.0	80.0
64 1/4"		58"		3	93.0	93.0	93.0	93.0	80.0	80.0
30 1/4"	48"	24"	41 3/4"	3	93.0	93.0	93.0	93.0	80.0	80.0
34 1/4"		28"		3	93.0	93.0	93.0	93.0	80.0	80.0
38 1/4"		32"		3	93.0	93.0	93.0	93.0	80.0	80.0
42 1/4"		36"		3	93.0	93.0	93.0	93.0	80.0	80.0
46 1/4"		40"		3	93.0	93.0	93.0	93.0	80.0	80.0
50 1/4"		44"		3	93.0	93.0	93.0	93.0	80.0	80.0
54 1/4"		48"		3	93.0	93.0	93.0	93.0	80.0	80.0
58 1/4"		52"		3	93.0	93.0	93.0	93.0	80.0	80.0
60 1/4"		54"		3	93.0	93.0	93.0	93.0	80.0	80.0
64 1/4"		58"		3	93.0	93.0	93.0	93.0	80.0	80.0
30 1/4"	60"	24"	53 3/4"	4	93.0	93.0	93.0	93.0	80.0	80.0
34 1/4"		28"		4	93.0	93.0	93.0	93.0	80.0	80.0
38 1/4"		32"		4	93.0	93.0	93.0	93.0	80.0	80.0
42 1/4"		36"		4	93.0	93.0	93.0	93.0	80.0	80.0
46 1/4"		40"		4	93.0	93.0	93.0	93.0	80.0	80.0
50 1/4"		44"		4	93.0	93.0	93.0	93.0	80.0	80.0
54 1/4"		48"		4	93.0	93.0	93.0	93.0	80.0	80.0
58 1/4"		52"		4	93.0	93.0	93.0	93.0	80.0	80.0
60 1/4"		54"		4	93.0	93.0	93.0	93.0	80.0	80.0
64 1/4"		58"		4	93.0	93.0	93.0	93.0	80.0	80.0
30 1/4"	72"	24"	65 3/4"	5	93.0	93.0	93.0	93.0	80.0	80.0
34 1/4"		28"		5	93.0	93.0	93.0	93.0	80.0	80.0
38 1/4"		32"		5	93.0	93.0	93.0	93.0	80.0	80.0
42 1/4"		36"		5	93.0	93.0	93.0	93.0	80.0	80.0
46 1/4"		40"		5	93.0	93.0	93.0	93.0	80.0	80.0
50 1/4"		44"		5	93.0	93.0	93.0	93.0	80.0	80.0
54 1/4"		48"		5	93.0	93.0	93.0	93.0	80.0	80.0
58 1/4"		52"		5	93.0	93.0	93.0	93.0	80.0	80.0
60 1/4"		54"		5	93.0	93.0	93.0	93.0	80.0	80.0
64 1/4"		58"		5	93.0	93.0	93.0	93.0	80.0	80.0

JA = NO. OF ANCHORS PER JAMB

DESIGN LOAD CAPACITY – PSF (SINGLE, DOUBLE, TRIPLE OR MULTIPLE UNITS)

SINGLE LITE FRAME DIMS.		GLASS D.L.O.		JA	GLASS TYPE 'A' 1/4" TAPCONS		GLASS TYPE 'B' 1/4" TAPCONS		GLASS TYPE 'C' 1/4" TAPCONS	
WIDTH	HEIGHT	WIDTH	HEIGHT		EXT.(+)	INT.(–)	EXT.(+)	INT.(–)	EXT.(+)	INT.(–)
30 1/4"	84"	24"	77 3/4"	6	93.0	93.0	93.0	93.0	80.0	80.0
34 1/4"		28"		6	93.0	93.0	93.0	93.0	80.0	80.0
38 1/4"		32"		6	93.0	93.0	93.0	93.0	80.0	80.0
42 1/4"		36"		6	93.0	93.0	93.0	93.0	80.0	80.0
46 1/4"		40"		6	93.0	93.0	93.0	93.0	80.0	80.0
50 1/4"		44"		6	93.0	93.0	93.0	93.0	80.0	80.0
54 1/4"		48"		6	93.0	93.0	93.0	93.0	80.0	80.0
58 1/4"		52"		6	93.0	93.0	93.0	93.0	80.0	80.0
60 1/4"		54"		6	93.0	93.0	93.0	93.0	80.0	80.0
64 1/4"		58"		6	93.0	93.0	93.0	93.0	80.0	80.0
30 1/4"	96"	24"	89 3/4"	7	93.0	93.0	93.0	93.0	80.0	80.0
34 1/4"		28"		7	93.0	93.0	93.0	93.0	80.0	80.0
38 1/4"		32"		7	93.0	93.0	93.0	93.0	80.0	80.0
42 1/4"		36"		7	93.0	93.0	93.0	93.0	80.0	80.0
46 1/4"		40"		7	93.0	93.0	93.0	93.0	80.0	80.0
50 1/4"		44"		7	93.0	93.0	93.0	93.0	80.0	80.0
54 1/4"		48"		7	93.0	93.0	93.0	93.0	80.0	80.0
58 1/4"		52"		7	93.0	93.0	93.0	93.0	80.0	80.0
60 1/4"		54"		7	93.0	93.0	93.0	93.0	80.0	80.0
64 1/4"		58"		7	92.3	92.3	92.3	92.3	80.0	80.0
30 1/4"	108"	24"	101 3/4"	8	93.0	93.0	93.0	93.0	80.0	80.0
34 1/4"		28"		8	93.0	93.0	93.0	93.0	80.0	80.0
38 1/4"		32"		8	93.0	93.0	93.0	93.0	80.0	80.0
42 1/4"		36"		8	93.0	93.0	93.0	93.0	80.0	80.0
46 1/4"		40"		8	93.0	93.0	93.0	93.0	80.0	80.0
50 1/4"		44"		8	93.0	93.0	93.0	93.0	80.0	80.0
54 1/4"		48"		8	93.0	93.0	93.0	93.0	80.0	80.0
58 1/4"		52"		8	93.0	93.0	93.0	93.0	80.0	80.0
60 1/4"		54"		8	90.6	90.6	90.6	90.6	80.0	80.0
64 1/4"		58"		8	82.5	82.5	82.5	82.5	80.0	80.0
30 1/4"	120"	24"	113 3/4"	9	93.0	93.0	93.0	93.0	80.0	80.0
34 1/4"		28"		9	93.0	93.0	93.0	93.0	80.0	80.0
38 1/4"		32"		9	93.0	93.0	93.0	93.0	80.0	80.0
42 1/4"		36"		9	93.0	93.0	93.0	93.0	80.0	80.0
46 1/4"		40"		9	93.0	93.0	93.0	93.0	80.0	80.0
50 1/4"		44"		9	93.0	93.0	93.0	93.0	80.0	80.0
54 1/4"		48"		9	92.0	92.0	92.0	92.0	80.0	80.0
58 1/4"		52"		9	80.0	80.0	–	–	80.0	80.0
60 1/4"		54"		9	80.0	80.0	–	–	80.0	80.0
64 1/4"		58"		9	75.1	75.1	–	–	75.1	75.1

DESIGN LOAD MAX. CAPACITY CHARTS

LARGE MISSILE IMPACT RESISTANT GLASS, SHUTTERS ARE NOT REQUIRED
(FOR GLAZING TYPES SEE DETAILS ON THIS SHEET)

TRANSOM & MULLION NOTES:

1. UNITS WITH TRANSOM MUST NOT EXCEED 48" D.L.O.
2. TRANSOM MUST NOT EXCEED 50 1/4" SPAN
3. UNITS WITHOUT MULLION MUST NOT EXCEED 58" X 113 3/4" D.L.O.
4. MULLION LIMITED TO 120" MAX. SPAN

JOSE A. MARTINEZ, P.E.
LICENSE NO: PE 0031509

5/25/04

Approved as complying with the Florida Buiding Code
Date JUNE 17, 2004
NOA# 04-0323.01
Miami Dade Product Control Division
By

Engineering: JOSE A. MARTINEZ, P.E.
CIVIL & STRUCTURAL ENGINEERS
(305) 887-4417
24 East 5th Street, Hialeah, Florida 33010

Drawing Name INSTALLATION & GLAZING OPTIONS, & DP CHARTS

PROTECTIVE GLASS PRODUCTS INC.
4851 S.W. 75 AVE.
MIAMI, FL. 33155
TEL. (305) 266-7594 FAX. (305) 266-7596

PGPS-500 L.M. IMPACT STORE FRONT

DATE 03-13-04
DRAWN N. E.
CHECK
SCALE 1/2" = 1"

Drawing Number: PGPS-501
Sheet: 3 of 6

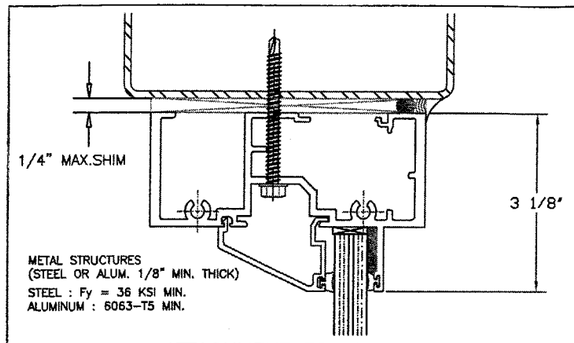

ATTACHMENT TO ALUM OR STEEL

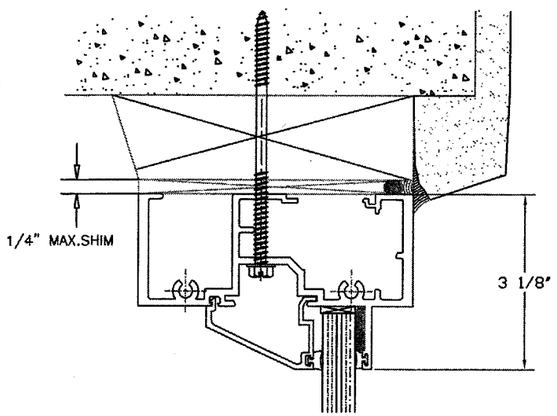

ATTACHMENT TO CONC. THROUGH 2X PT BUCK

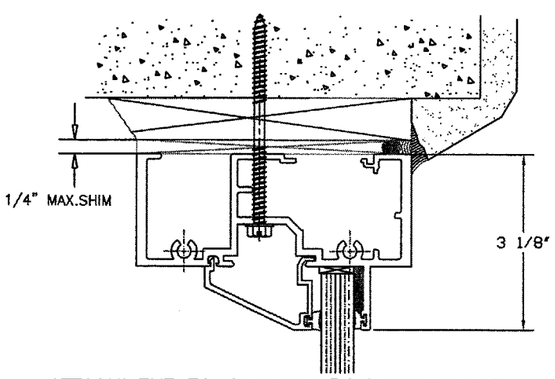

ATTACHMENT TO CONC. THROUGH 1X PT BUCK

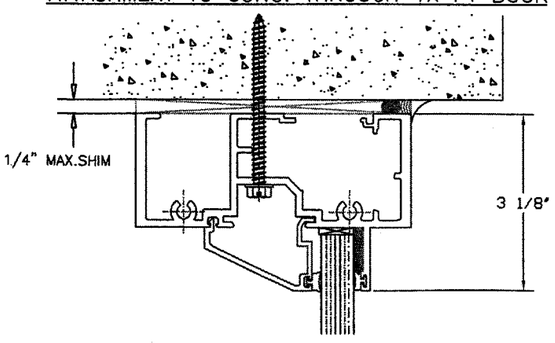

ATTACHMENT TO CONCRETE

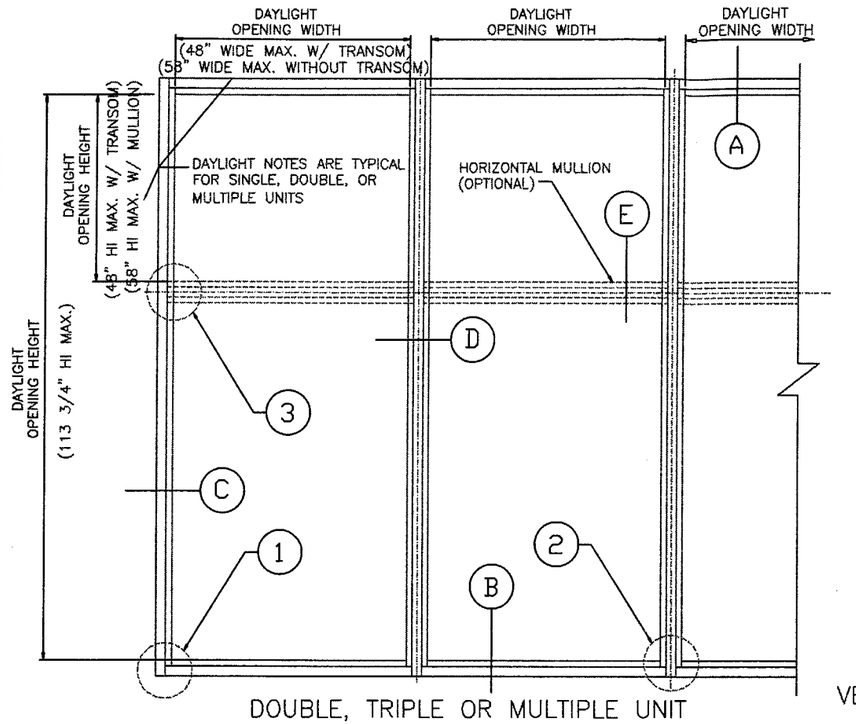

DOUBLE, TRIPLE OR MULTIPLE UNIT

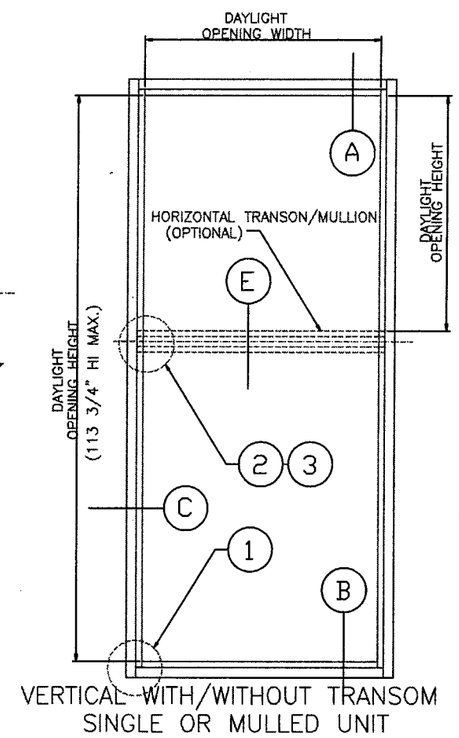

VERTICAL WITH/WITHOUT TRANSOM
SINGLE OR MULLED UNIT

TRANSOM & MULLION NOTES:

1. UNITS WITH TRANSOM MUST NOT EXCEED 48" D.L.O.
2. TRANSOM MUST NOT EXCEED 50 1/4" SPAN
3. UNITS WITHOUT MULLION MUST NOT EXCEED 58" X 113 3/4" D.L.O.
4. MULLION LIMITED TO 120" MAX. SPAN

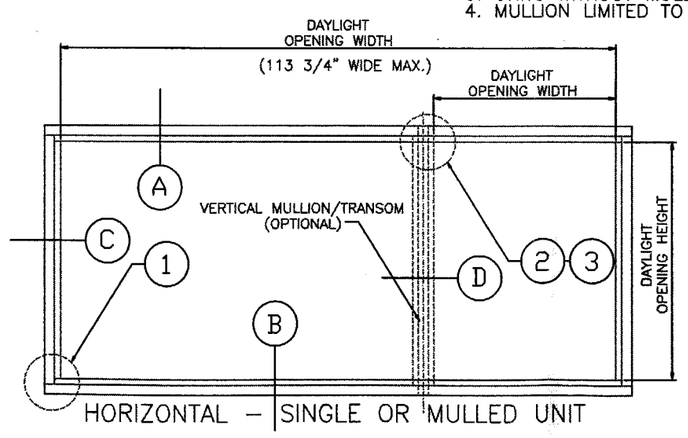

HORIZONTAL – SINGLE OR MULLED UNIT

APPROVED ELEVATIONS

*(WITH MULLION & WITHOUT TRANSOM)

LARGE MISSILE IMPACT RESISTANT GLASS, SHUTTERS ARE NOT REQUIRED

INSTALLATION OPTIONS

SEE ELEVATIONS FOR OTHER ANCHOR LOCATIONS
(FOR ANCHOR TYPES SEE NOTES ON SHEET 5 of 6)

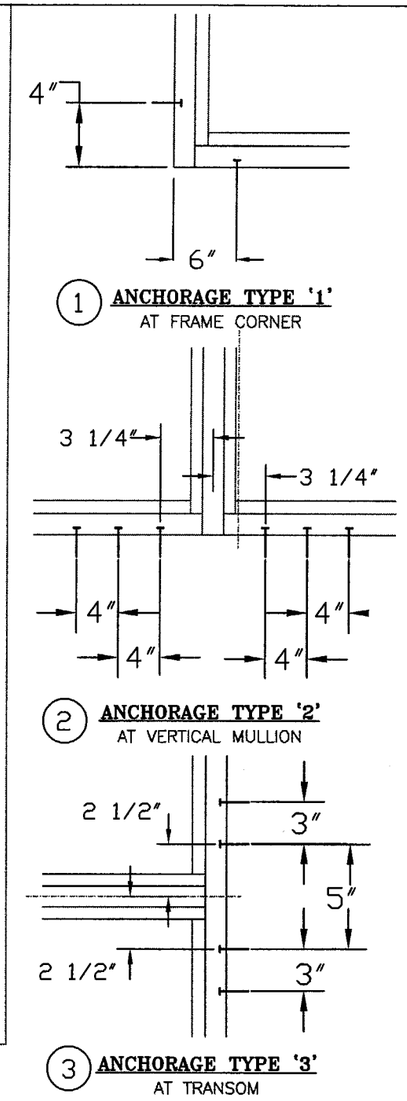

FRAME ANCHORAGE TYPICAL DETAILS

SEE ELEVATIONS AT SHEETS 1 & 2 OF 6 FOR
ANCHOR LOCATIONS NOT SHOWN ON THESE DETAILS

JOSE A. MARTINEZ, P.E.
LICENSE NO: PE 0031509

5/25/04

Approved as complying with the
Florida Buiding Code
Date JUNE 17, 2004
NOA# 04-0323.01
Miami Dade Product Control
Division
By

Engineering: JOSE A. MARTINEZ, P.E.
CIVIL & STRUCTURAL ENGINEERS
(305) 887-4417
24 East 5th Street, Hialeah, Florida 33010

Drawing Name: ELEVATIONS, & FRAME ANCHORAGE DETAILS

PROTECTIVE GLASS PRODUCTS INC.
4851 S.W. 75 AVE.
MIAMI, FL. 33155
TEL (305) 266-7594 FAX. (305) 266-7596

PGPS-500 L.M. IMPACT STORE FRONT

DATE 03-13-04
DRAWN N. E.
CHECK
SCALE 1/2" = 1"

Drawing Number: PGPS-501
Sheet: 4 of 8

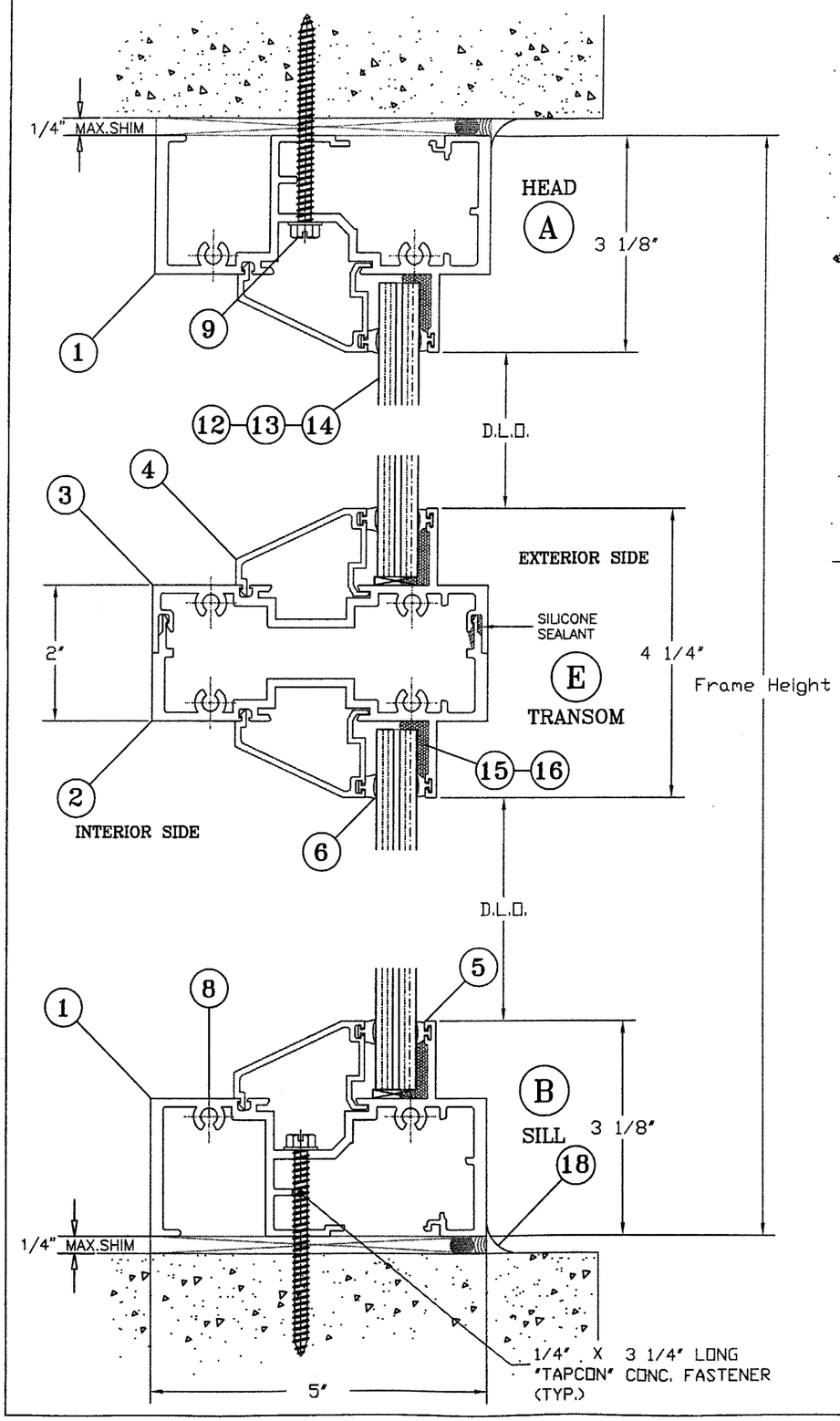

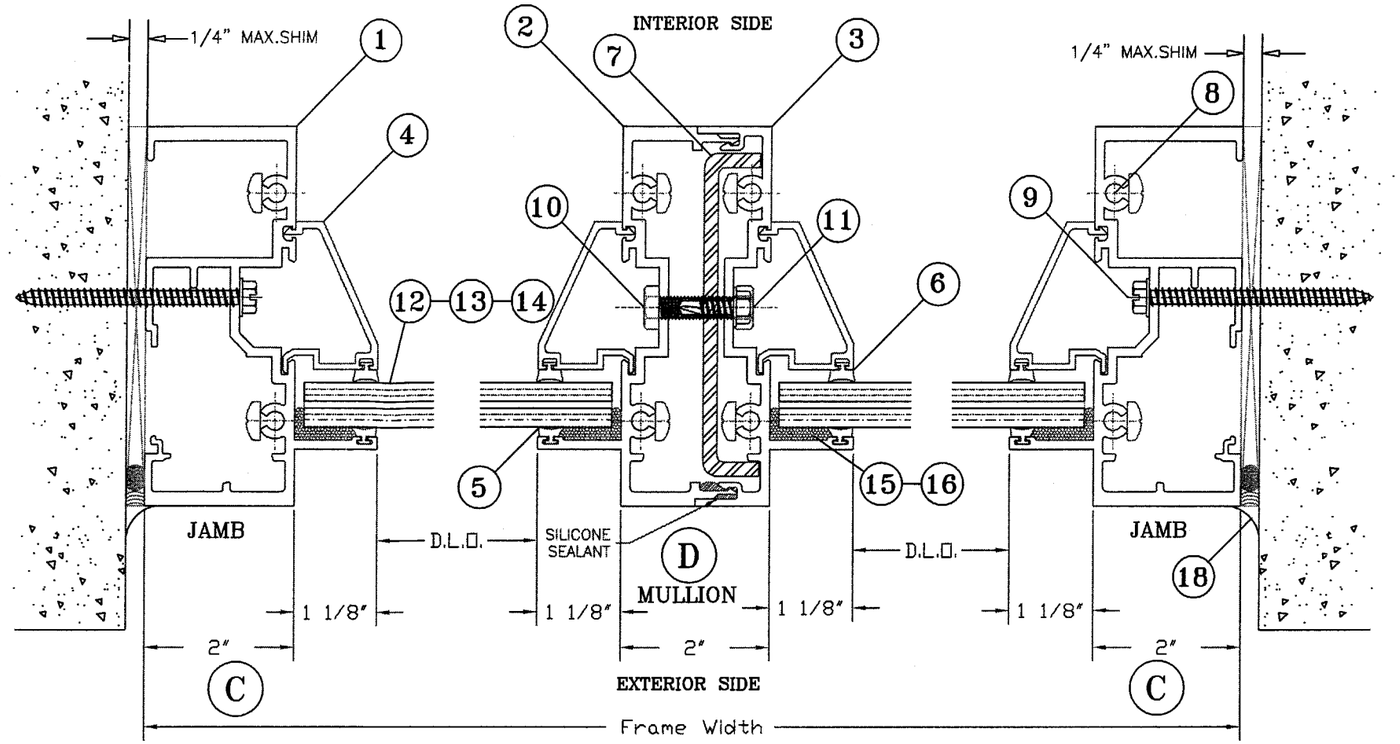

DESIGN LOAD MAX. CAPACITY CHARTS

SEE SHEET 3 OF 6 FOR MAX. LOAD CAPACITY, GLAZING OPTIONS AND DETAILS

TYPICAL ANCHORS:

1/4" TAPCONS

INTO 2X WOOD BUCKS OR WOOD STRUCTURE
1-1/2" MIN. PENETRATION INTO WOOD

THRU 1X WOOD BUCKS INTO MASONRY OR DIRECTLY INTO MASONRY
1-3/4" MIN. EMBED INTO MASONRY OR CONC.

ANCHOR NOTE:

Fastener Allowable Load:
Fy = 9.2 x 10^4 min.
Fu = 1.2 x 10^5 min.
(33% increase in allowable loads has been used)

1/4" HEX HEAD SELF DRILLING SCREWS

INTO METAL STRUCTURES (1/8" MIN. THICKNESS)

SEALANTS:

FRAME, MULLION AND TRANSOM CORNERS
SEALED WITH DOW CORNING #1199SSL SEALANT.

CAULKING:

EXTERIOR FRAME PERIMETER
CAULKED WITH VULKEM 911 OR EQUIVALENT

JOSE A. MARTINEZ, P.E.
LICENSE NO: PE 0031509

5/25/04

Approved as complying with the Florida Buiding Code
Date JUNE 17 2004
NOA# 04-0323.01
Miami Dade Product Control Division
By

Engineering: JOSE A. MARTINEZ, P.E.
CIVIL & STRUCTURAL ENGINEERS
(305) 887-4417
24 East 5th Street, Hialeah, Florida 33010

Drawing Name: TEST UNIT ELEVATION, GLAZING DETAILS & NOTES

PROTECTIVE GLASS PRODUCTS INC.
4851 S.W. 75 AVE.
MIAMI, FL. 33155
TEL. (305) 266-7594 FAX. (305) 266-7596

PGPS-500 L.M. IMPACT STORE FRONT

DATE 03-13-04
DRAWN N. E.
CHECK
SCALE 1/2" = 1"

Drawing Number: PGPS-501
Sheet: 5 of 6

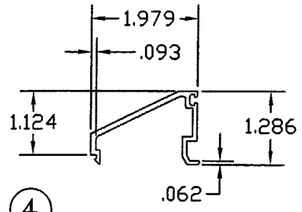

4 SLOPED GLAZING BEAD

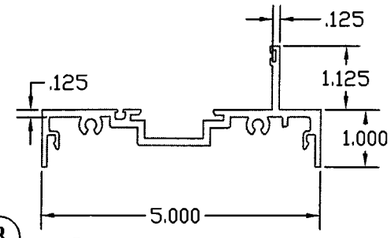

3 FEMALE MULLION, TRANSOM

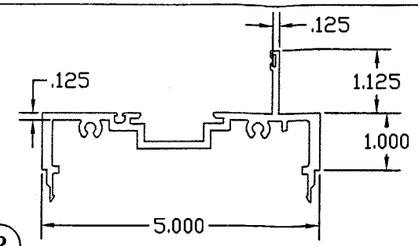

2 MALE MULLION, TRANSOM

5 6 GLAZING GASKETS

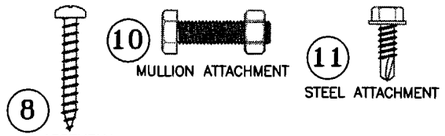

FASTENERS

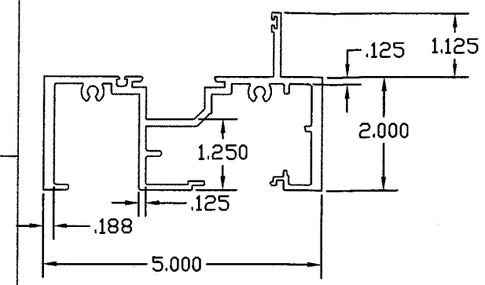

1 FRAME HEAD, SILL & JAMB

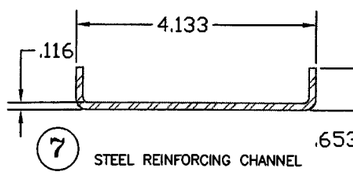

7 STEEL REINFORCING CHANNEL

"PGPS500" IMPACT STORE FRONT BILL OF MATERIALS

PART #	DRAWING #	REQD.	DESCRIPTION	REMARKS
1	PGP-001	1	FRAME HEAD, SILL, JAMB	6005-T5 ALUMINUM
2	PGP-002	1	MALE MULLION / TRANSOM	6005-T5 ALUMINUM
3	PGP-003	1	FEMALE MULLION / TRANSOM	6005-T5 ALUMINUM
4	PGP-006	AS REQ'D	INTERIOR GLAZING BEAD	6063-T5 ALUMINUM
5	PGP-201	AS REQ'D	EXTERIOR GLAZING GASKET	VINYL - SANTOPRENE
6	PGP-202	AS REQ'D	INTERIOR GLAZING GASKET	VINYL - SANTOPRENE
7	STL-101	1 / Mull	STEEL REINFORCEMENT CHANNEL	.653' X 4.133' X .116'
8	FST-101	AS REQ'D	FRAME ASSEMBLY SCREWS	# 12 X 1 1/2' ph./phil.
9	FST-102	AS REQ'D	FRAME INSTALLATION SCREWS	#14 X 4' L./S.M.S./HEX
10	FST-103	AS REQ'D	MULLION ATTACHMENT SCREWS	5/16' x 1 1/4' SDS-HEX
11	FST-104	AS REQ'D	STEEL ATTACHMENT SCREW	#14 X 3/4' L./S.D.S./HEX
12	*	AS REQ'D.	1/2' LAMINATED H.S. GLASS	OLDCASTLE 'STORMGLASS'
13	*	AS REQ'D.	1/2' LAMINATED H.S. GLASS	SAFLEX/SOLUTIA 'HP'
14	*	AS REQ'D.	1/2' LAMINATED H.S. GLASS	DUPONT 'SGP'
15	*	*	GLAZING SILICONE	TREMCO 'SPECTRUM 2'
16	*	*	GLAZING SILICONE	DOW CORNING -995
17	*	*	FRAME JOINT SEALANT	DOW CORNING 1199 SSL
18	*	*	FRAME PERIMETER CAULKING	VULKEM 911

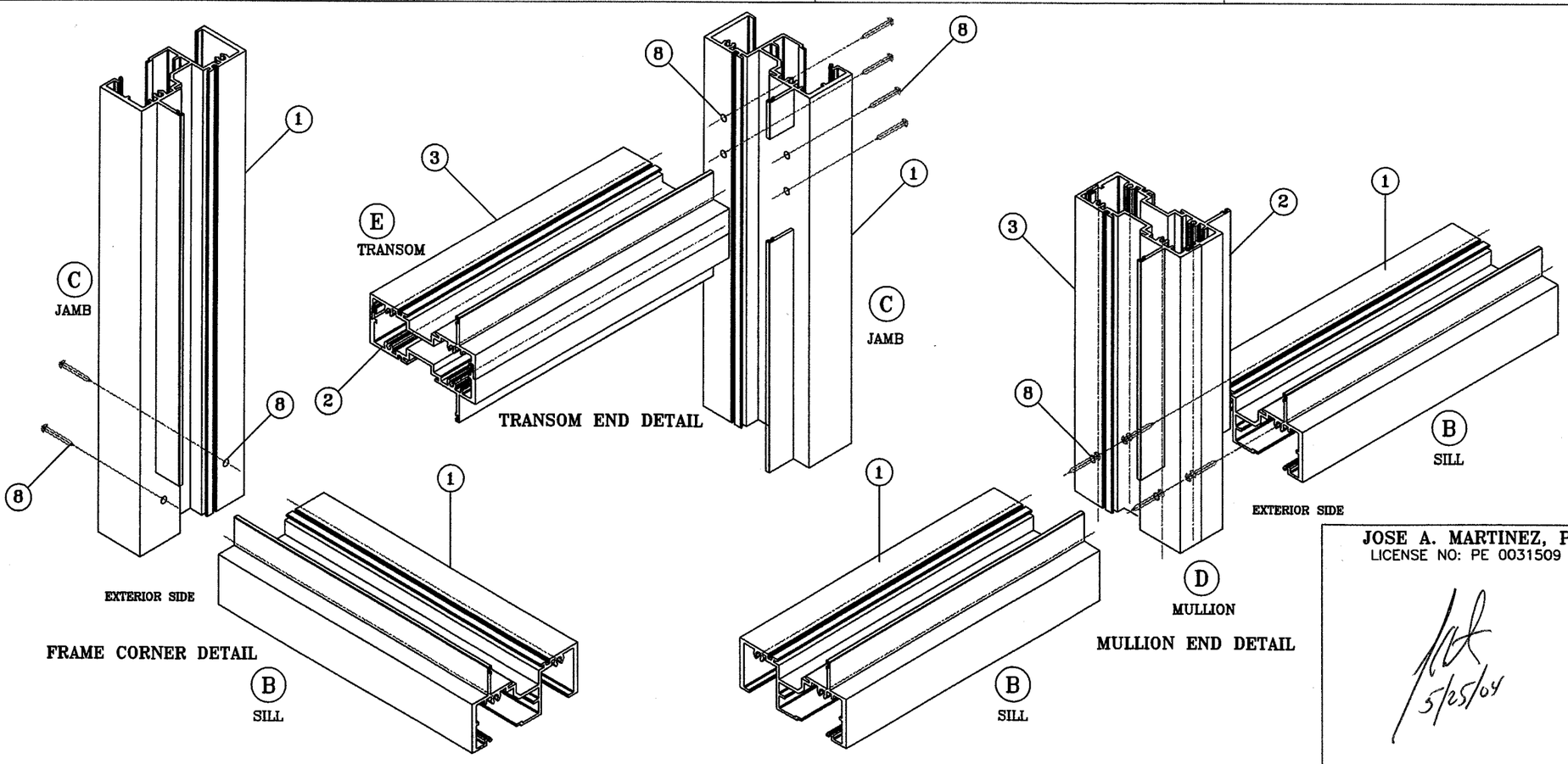

JOSE A. MARTINEZ, P.E.
LICENSE NO: PE 0031509

5/25/04

Approved as complying with the Florida Buiding Code
Date: JUNE 17, 2004
NOA# 04-0323.01
Miami Dade Product Control Division
By:

Engineering: JOSE A. MARTINEZ, P.E.
CIVIL & STRUCTURAL ENGINEERS
(305) 887-4417
24 East 5th Street, Hialeah, Florida 33010

Drawing Name: TEST UNIT ELEVATION, GLAZING DETAILS & NOTES

PROTECTIVE GLASS PRODUCTS INC.
4851 S.W. 75 AVE.
MIAMI, FL. 33155
TEL. (305) 266-7594 FAX. (305) 266-7596

PGPS-500 L.M. IMPACT STORE FRONT

DATE 03-13-04
DRAWN N. E.
CHECK
SCALE 1/2" = 1"

Drawing Number: PGPS-501
Sheet: 6 of 6