MIAMI-DADE

BUILDING CODE COMPLIANCE OFFICE (BCCO)
PRODUCT CONTROL DIVISION

MIAMI-DADE COUNTY, FLORIDA
METRO-DADE FLAGLER BUILDING
140 WEST FLAGLER STREET, SUITE 1603
MIAMI, FLORIDA 33130-1563
(305) 375-2901 FAX (305) 375-2908

NOTICE OF ACCEPTANCE (NOA)

Gulfstream Aluminum and Shutter Corporation
3001 SE Gran Park Way
Stuart, Florida 34997

SCOPE:
This NOA is being issued under the applicable rules and regulations governing the use of construction materials. The documentation submitted has been reviewed by Miami-Dade County Product Control Division and accepted by the Board of Rules and Appeals (BORA) to be used in Miami Dade County and other areas where allowed by the Authority Having Jurisdiction (AHJ).

This NOA shall not be valid after the expiration date stated below. The Miami-Dade County Product Control Division (In Miami Dade County) and/or the AHJ (in areas other than Miami Dade County) reserve the right to have this product or material tested for quality assurance purposes. If this product or material fails to perform in the accepted manner, the manufacturer will incur the expense of such testing and the AHJ may immediately revoke, modify, or suspend the use of such product or material within their jurisdiction. BORA reserves the right to revoke this acceptance, if it is determined by Miami-Dade County Product Control Division that this product or material fails to meet the requirements of the applicable building code.

This product is approved as described herein, and has been designed to comply with the High Velocity Hurricane Zone of the Florida Building Code.

DESCRIPTION: "Impact" Aluminum Hinged Colonial Shutter

APPROVAL DOCUMENT: Drawing No. 1000, titled "Impact Colonial Shutters", sheets 1 through 7 of 7, prepared by W. W. Schaefer Engineering & Consulting, P.A., dated January 10, 2001, signed and sealed by Warren W. Schaefer, P.E. on March 18, 2004, bearing the Miami-Dade County Product Control Revision stamp with the Notice of Acceptance number and expiration date by the Miami-Dade County Product Control Division.

MISSILE IMPACT RATING: Large and Small Missile Impact

LABELING: Each unit shall bear a permanent label with the manufacturer's name or logo, city, state and the following statement: "Miami-Dade County Product Control Approved", unless otherwise noted herein.

RENEWAL of this NOA shall be considered after a renewal application has been filed and there has been no change in the applicable building code negatively affecting the performance of this product.

TERMINATION of this NOA will occur after the expiration date or if there has been a revision or change in the materials, use, and/or manufacture of the product or process. Misuse of this NOA as an endorsement of any product, for sales, advertising or any other purposes shall automatically terminate this NOA. Failure to comply with any section of this NOA shall be cause for termination and removal of NOA.

ADVERTISEMENT: The NOA number preceded by the words Miami-Dade County, Florida, and followed by the expiration date may be displayed in advertising literature. If any portion of the NOA is displayed, then it shall be done in its entirety.

INSPECTION: A copy of this entire NOA shall be provided to the user by the manufacturer or its distributors and shall be available for inspection at the job site at the request of the Building Official.

This NOA **revises & renews NOA #00-0411.10** and consists of this page 1, evidence submitted page(s) as well as approval document mentioned above.

The submitted documentation was reviewed by **Helmy A. Makar, P.E.**

Helmy A. Makar
05/06/2004

PRODUCT CONTROL ACCEPTED

NOA No 04-0325.02
Expiration Date: 05/06/2009
Approval Date: 05/06/2004

Gulfstream Aluminum and Shutter Corporation

NOTICE OF ACCEPTANCE: EVIDENCE SUBMITTED

1. EVIDENCE SUBMITTED UNDER PREVIOUS APPROVAL #00-0411.10

A. DRAWINGS

1. *Drawing No. 1000, titled " Impact Colonial Shutter ", prepared by W. W. Schaefer Engineering & Consulting, P.A., dated January 10, 2001, sheets 1 through 7 of 7, signed and sealed by Warren W. Schaefer, P.E.*

B. TESTS

1. *Test Report on: 1) Large Missile Impact Test, per PA-201*
   2) Cyclic Wind Pressure Test, per PA-203 and
   3) Uniform Static Air Pressure test per PA-202, of colonial shutters, prepared by Hurricane Test Laboratory Inc., Report No. ***0205-1201-99****, dated March 23, 2000, signed and sealed by Vinu J. Abraham, P.E.*

C. CALCULATIONS

1. *Anchor analysis and calculations dated 12/24/99, Pages 1 to 15, prepared by W. W. Schaefer Engineering & Consulting, P.A., signed and sealed by Warren W. Schaefer, P.E.*

D. MATERIAL CERTIFICATION

1. *Certified Tensile Test Report No. 0AM-142, prepared by QC Metallurgical Inc., dated 03/02/2000, per ASTM E8-93, signed and sealed by Frank Grate, P.E.*

2. NEW EVIDENCE SUBMITTED

A. DRAWINGS

1. *Drawing No. 1000, titled "Impact Colonial Shutters", sheets 1 through 7 of 7, prepared by W. W. Schaefer Engineering & Consulting, P.A., dated January 10, 2001, signed and sealed by Warren W. Schaefer, P.E. on March 18, 2004.*

B. TESTS

1. *None.*

C. CALCULATIONS

1. *None.*

D. QUALITY ASSURANCE

1. *By Miami-Dade County Building Code Compliance Office.*

E. MATERIAL CERTIFICATIONS

1. *None.*

Helmy A. Makar, P.E.
Product Control Examiner
NOA No 04-0325.02
Expiration Date: 05/06/2009
Approval Date: 05/06/2004

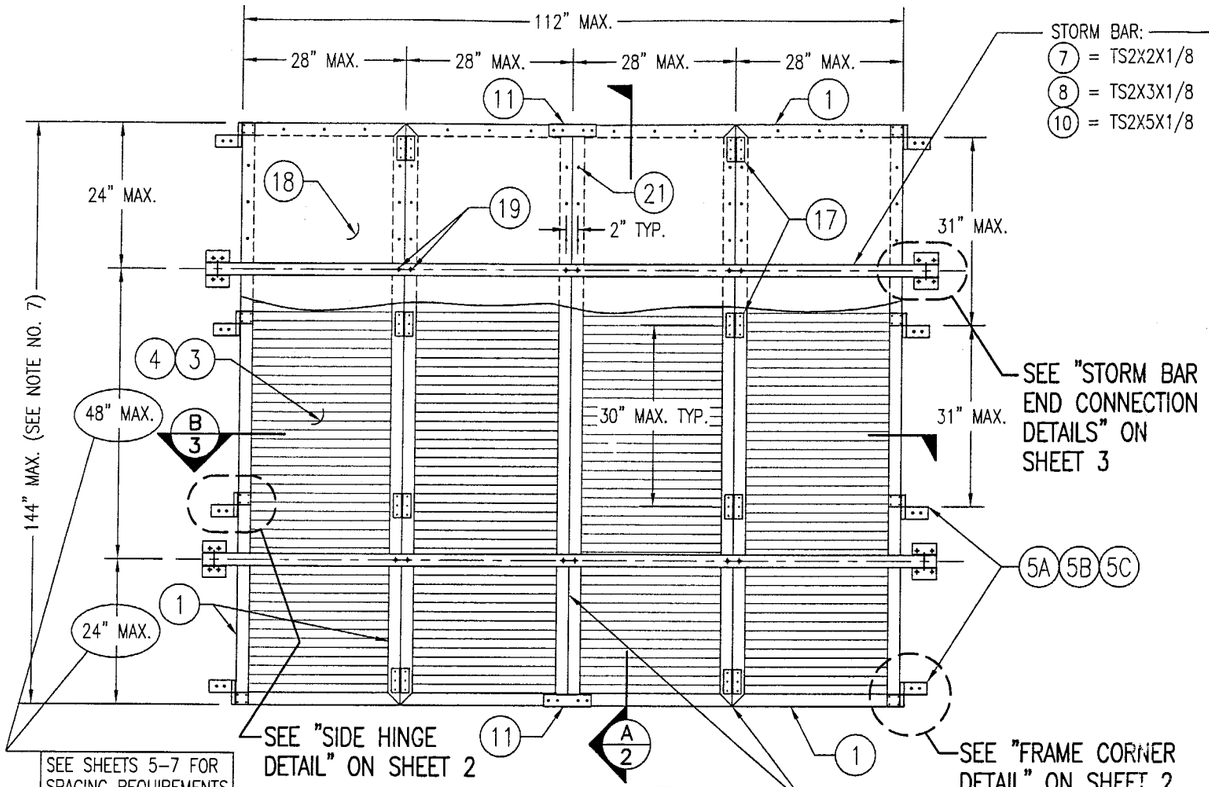

SEE SHEETS 5–7 FOR SPACING REQUIREMENTS OF STORM BARS FOR SINGLE & MULTIPLE BAR SHUTTERS.

EXTERIOR ELEVATION QUAD PANEL SHUTTER

SCALE: 1/2"=1'-0"

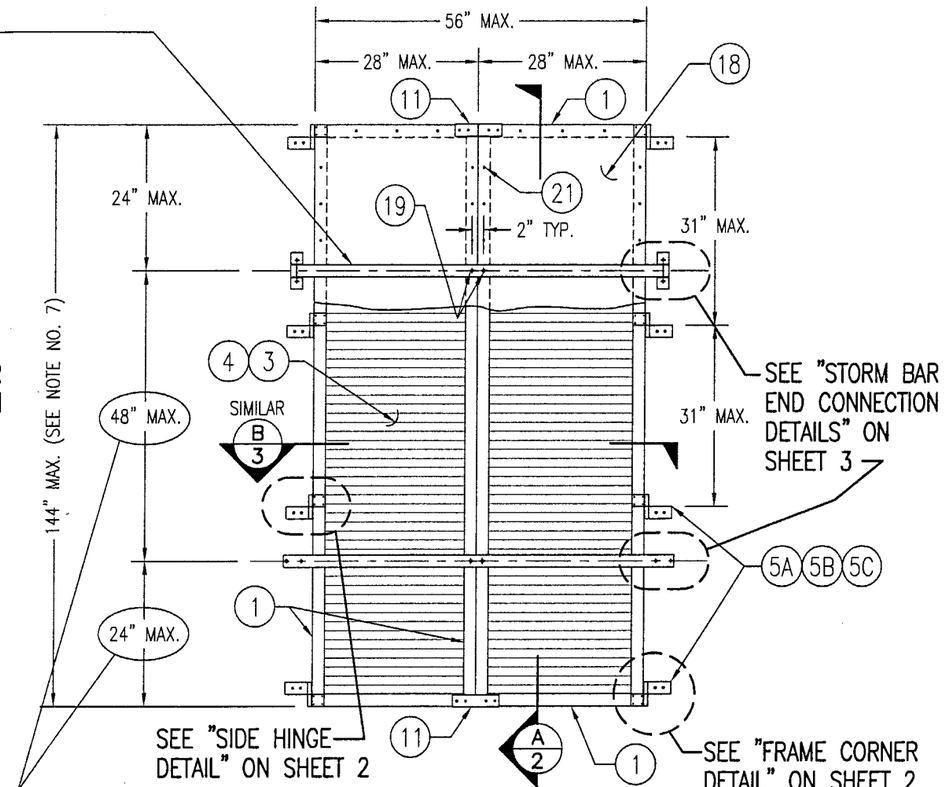

SEE SHEETS 5–7 FOR SPACING REQUIREMENTS OF STORM BARS FOR SINGLE & MULTIPLE BAR SHUTTERS.

EXTERIOR ELEVATION DOUBLE PANEL SHUTTER

SCALE: 1/2"=1'-0"

GENERAL NOTES:

1. ALL ALUMINUM EXTRUSIONS SHALL BE 6063–T5 ALLOY UNLESS SHOWN OTHERWISE ON THESE DRAWINGS.
2. IT SHALL BE THE RESPONSIBILITY OF THE PERMIT HOLDER TO VERIFY THE STRUCTURAL INTEGRITY OF THE EXISTING STRUCTURE TO SUPPORT THE LOADS SUPERIMPOSED BY THE SHUTTERS.
3. THESE SHUTTER SYSTEMS HAVE BEEN DESIGNED & TESTED IN ACCORDANCE WITH THE FLORIDA BUILDING CODE (FBC) 2001 EDITION AND PROTOCOLS TAS–201, 202 & 203.
4. THESE SHUTTER SYSTEMS HAVE BEEN TESTED, ANALYZED & APPROVED FOR WIND PRESSURES NOT TO EXCEED THOSE SHOWN IN THE LOAD TABLES.
5. ALL FASTENERS SHALL BE AS SPECIFIED ON THESE DRAWINGS WITH MINIMUM EDGE DISTANCE, SPACINGS & EMBEDMENTS BEING AS SPECIFIED.
6. ALL CONCRETE SUBSTRATE SHALL BE MIN. 3000 PSI. ALL WOOD SUBSTRATE SHALL BE WITH G = 0.55 MIN.
7. SHUTTER WIDTH SHALL BE RESTRICTED BY THE MAXIMUM DIMENSIONS SHOWN. SHUTTER HEIGHT MAY EXCEED 96" (UP TO 144" MAX.) PROVIDING THE REQUIRED NUMBER & SPACING OF STORM BARS ARE USED.
8. EACH SHUTTER SHALL HAVE A LEGIBLE & READILY VISIBLE MARKING INSTRUCTING THE OWNER/TENNANT TO SECURE THE SHUTTER WITH BRACKETS & STORM BARS, PER THE MANUFACTURER'S INSTRUCTIONS, DURING PERIODS OF HURRICANE WARNINGS. THE OWNER/TENNANT SHALL BE RESPONSIBLE FOR SECURING THE SHUTTER AS REQUIRED IN THESE APPROVED DRAWINGS.
9. EACH SHUTTER ASSEMBLY SHALL BE PERMANENTLY LABELED AS FOLLOWS:
   GULFSTREAM ALUMINUM & SHUTTER CORP.
   STUART, FLORIDA
   MIAMI–DADE COUNTY PRODUCT CONTROL APPROVED
10. POSITIVE & NEGATIVE DESIGN WIND LOAD CALCULATIONS SHALL BE PERFORMED IN ACCORDANCE WITH THE APPLICABLE WIND CODE FOR THE LOCAL JURISDICTION WHERE THE SHUTTERS ARE BEING INSTALLED TO VERIFY THE WIND LOADS ARE LESS THAN OR EQUAL TO THE DESIGN WIND LOAD RATING FOR EACH SHUTTER.
11. A 33 1/3% INCREASE IS USED IN THE ANCHOR DESIGN CALCULATIONS DUE TO WIND LOAD.

NOTE: SINGLE & THREE PANEL SHUTTERS ARE ALSO PART OF THIS APPROVAL. SINGLE PANEL SHUTTERS WILL COMPLY WITH THE DOUBLE PANEL SHUTTER REQUIREMENTS & THE THREE PANEL SHUTTERS WILL COMPLY WITH THE QUAD PANEL SHUTTER REQUIREMENTS.

MAX. ALLOWABLE DESIGN WIND LOADS	
POSITIVE	NEGATIVE
80 PSF	80 PSF

SEE SHUTTER & STORM BAR TABLES ON SHEETS 5–7 FOR REDUCED LOADS AS CONTROLLED BY SHUTTER SPAN, STORM BAR SPAN & STORM BAR SPACING.

STORM BAR NOTE: THE NUMBER OF STORM BARS REQUIRED WITH EACH SHUTTER TYPICALLY VARIES FROM 1 TO 3 & IS DEPENDENT ON SHUTTER SIZE & REQUIRED DESIGN PRESSURE. SEE ELEVATION SKETCHES & LOAD TABLES ON SHEETS 5–7 FOR STORM BAR REQUIREMENTS.

PRODUCT REVISED
as complying with the Florida Buiding Code
Acceptance No 04-0325.02
Expiration Date 05/06/2009
By Helena A. Melo
Miami Dade Product Control Division

DRAWN BY: W.W.S.	CHECKED BY: W.W.S.
PLOT: 1=24	DATE: 01/10/01

NO.	REVISION DESCRIPTION	BY	DATE

(DADE)

DRAWING TITLE
IMPACT COLONIAL SHUTTERS

MANUFACTURER
GULFSTREAM ALUMINUM & SHUTTER CORP.
3001 S.E. GRAN PARK WAY
STUART, FLORIDA 34997
(772) 287–6476

CONSULTANTS
W. W. SCHAEFER ENGINEERING & CONSULTING, P.A.
8895 N. MILITARY TRAIL, SUITE C-214
PALM BEACH GARDENS, FL 33410
PHONE: 561-775-4902 FAX: 561-775-4903

CERTIFICATION
MAR 18 2004
WARREN W. SCHAEFER, P.E.
P.E. NO. 44135

DRAWING NO. 1000 REV.

SHEET NO. 1 OF 7

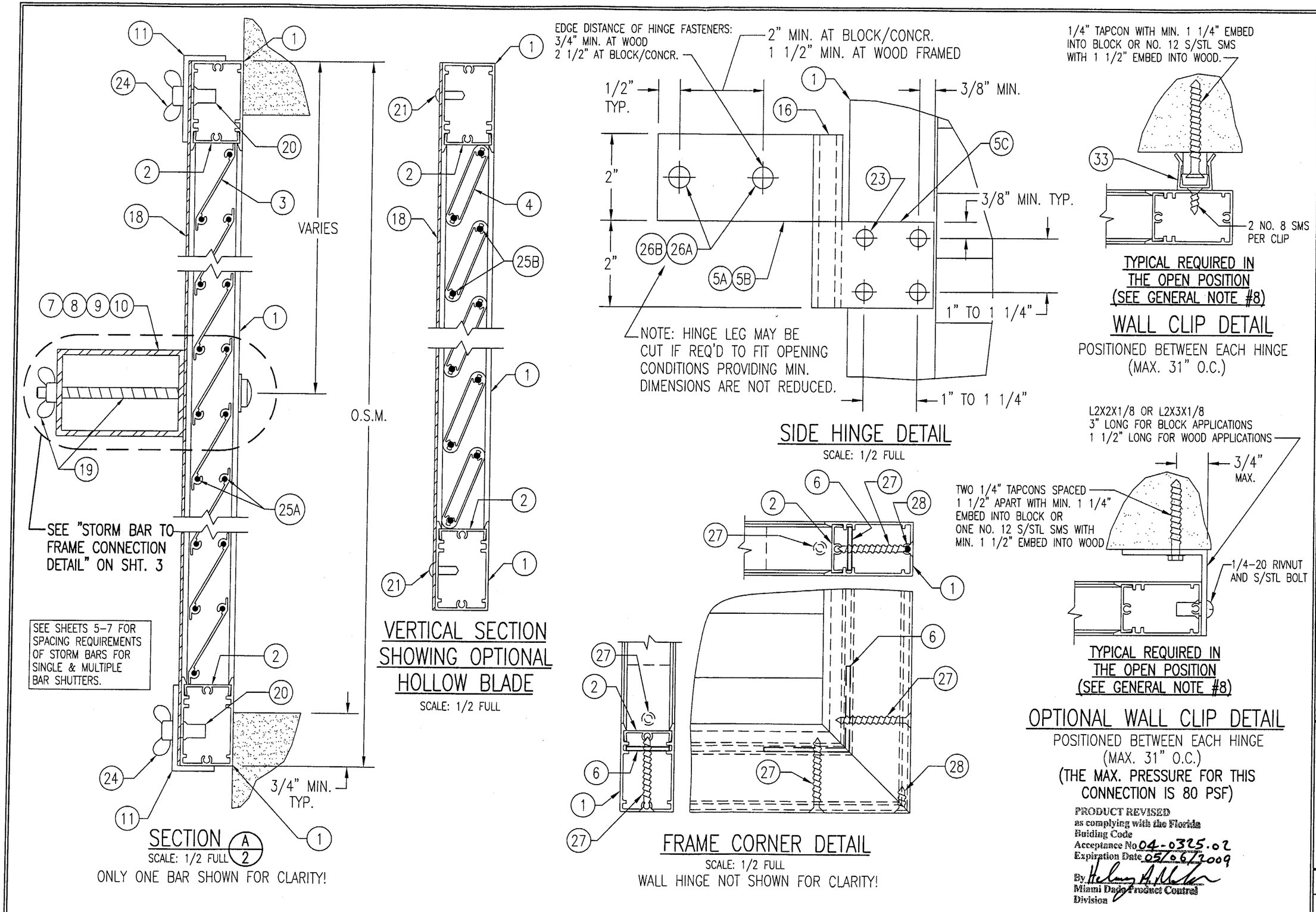

SEE SHEETS 5-7 FOR SPACING REQUIREMENTS OF STORM BARS FOR SINGLE & MULTIPLE BAR SHUTTERS.

SECTION A/2
SCALE: 1/2 FULL
ONLY ONE BAR SHOWN FOR CLARITY!

VERTICAL SECTION SHOWING OPTIONAL HOLLOW BLADE
SCALE: 1/2 FULL

SIDE HINGE DETAIL
SCALE: 1/2 FULL

FRAME CORNER DETAIL
SCALE: 1/2 FULL
WALL HINGE NOT SHOWN FOR CLARITY!

TYPICAL REQUIRED IN THE OPEN POSITION (SEE GENERAL NOTE #8)

WALL CLIP DETAIL
POSITIONED BETWEEN EACH HINGE (MAX. 31" O.C.)

TYPICAL REQUIRED IN THE OPEN POSITION (SEE GENERAL NOTE #8)

OPTIONAL WALL CLIP DETAIL
POSITIONED BETWEEN EACH HINGE (MAX. 31" O.C.)
(THE MAX. PRESSURE FOR THIS CONNECTION IS 80 PSF)

PRODUCT REVISED
as complying with the Florida Building Code
Acceptance No 04-0325.02
Expiration Date 05/06/2009
By [signature]
Miami Dade Product Control Division

DRAWN BY: W.W.S.	CHECKED BY: W.W.S.
PLOT: 1=2	DATE: 01/10/01

NO.	REVISION DESCRIPTION	BY	DATE

(DADE)

MANUFACTURER
GULFSTREAM ALUMINUM & SHUTTER CORP.
3001 S.E. GRAN PARK WAY
STUART, FLORIDA 34997
(772) 287-6476

DRAWING TITLE
IMPACT COLONIAL SHUTTERS

CONSULTANTS
W. W. SCHAEFER ENGINEERING & CONSULTING, P.A.
8895 N. MILITARY TRAIL; SUITE C-204
PALM BEACH GARDENS, FL 33410
PHONE: 561-775-4902 FAX: 561-775-4903

CERTIFICATION
MAR 18 2004
WARREN W. SCHAEFER, P.E.
P.E. NO. 44135

DRAWING NO. 1000 | REV.
SHEET NO. 2 OF 7

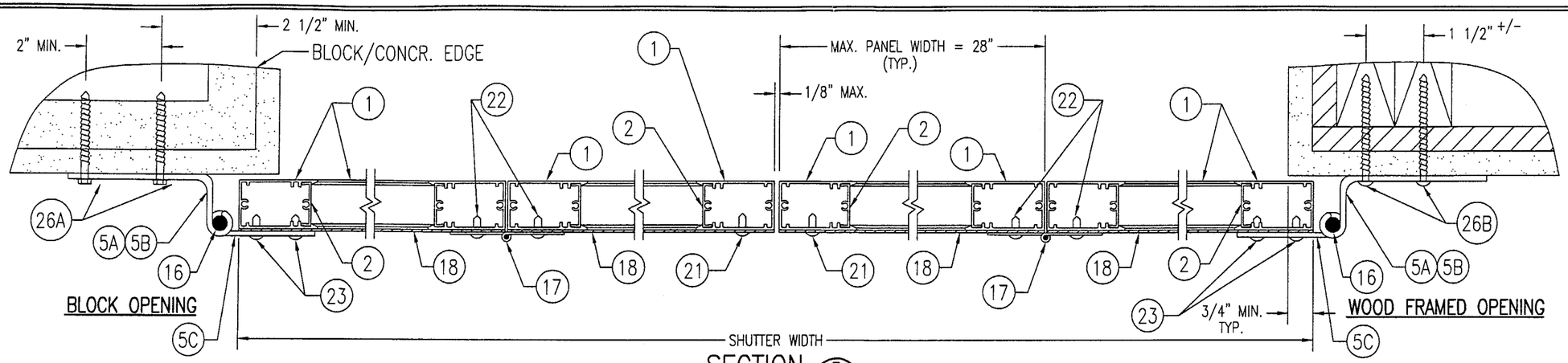

SECTION B/3
SCALE: 1/3 FULL
STORM BAR NOT SHOWN FOR CLARITY!

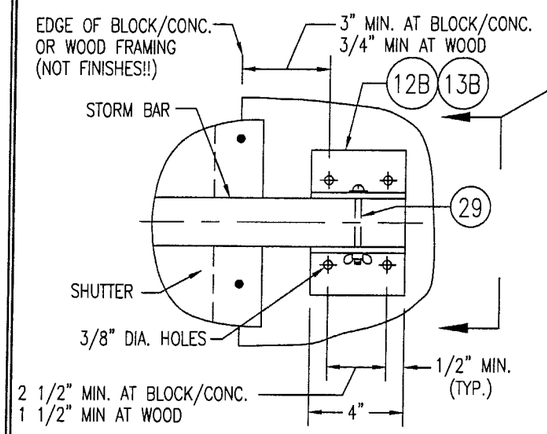

STORM BAR END CONNECTION "A"
SCALE: 2"=1'-0"

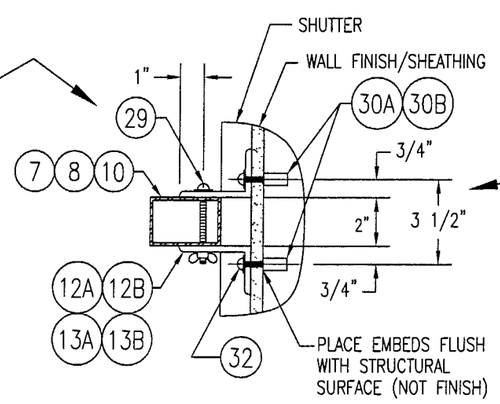

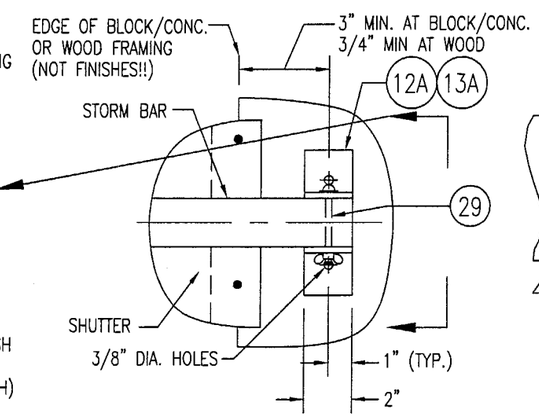

STORM BAR END CONNECTION "B"
SCALE: 2"=1'-0"

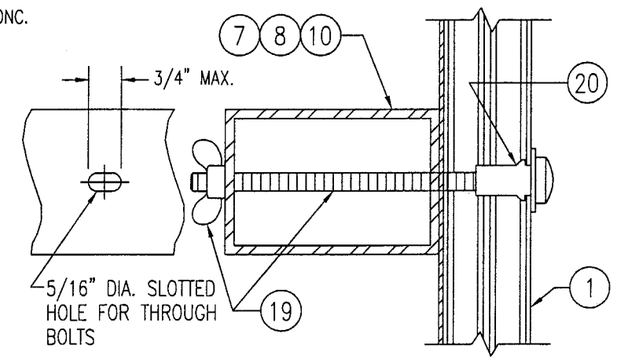

STORM BAR TO FRAME CONNECTION DETAIL
SCALE: 1/2 FULL

NOTE: CONNECTION OF STORM BAR TO SHUTTER FRAMES IS NOT REQUIRED AT SINGLE BAR SHUTTERS.

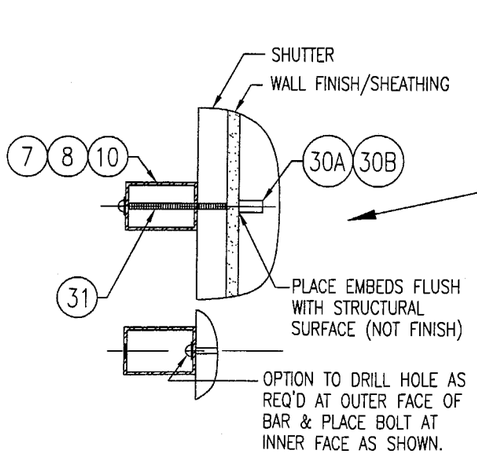

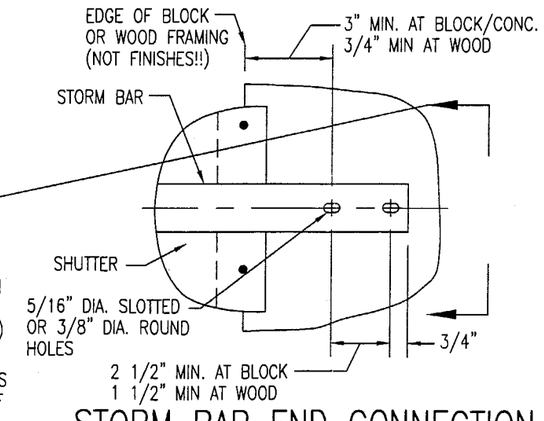

STORM BAR END CONNECTION "C"
SCALE: 2"=1'-0"

PRODUCT REVISED
as complying with the Florida
Building Code
Acceptance No 04-0325.02
Expiration Date 05/06/2009
By [signature]
Miami Dade Product Control
Division

DRAWN BY: W.W.S.	CHECKED BY: W.W.S.
PLOT: 1=3	DATE: 01/10/01

NO.	REVISION DESCRIPTION	BY	DATE

DRAWING TITLE
IMPACT COLONIAL SHUTTERS (DADE)

MANUFACTURER
GULFSTREAM ALUMINUM & SHUTTER CORP.
3001 S.E. GRAN PARK WAY
STUART, FLORIDA 34997
(772) 287-6476

CONSULTANTS
W. W. SCHAEFER ENGINEERING & CONSULTING, P.A.
8895 N. MILITARY TRAIL; SUITE C-204
PALM BEACH GARDENS, FL 33410
PHONE: 561-775-4902 FAX: 561-775-4903

CERTIFICATION
MAR 18 2004
WARREN W. SCHAEFER, P.E.
P.E. NO. 44135

DRAWING NO. 1000
REV.
SHEET NO. 3 OF 7

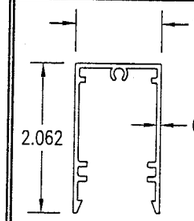

1 FRAME
6063-T6 ALUMINUM

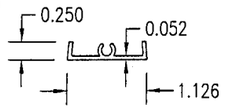

2 FRAME CAP
6063-T6 ALUMINUM

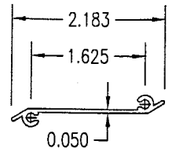

3 Z-BLADE
6063-T6 ALUMINUM

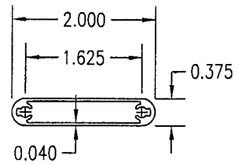

4 HOLLOW BLADE
6063-T6 ALUMINUM

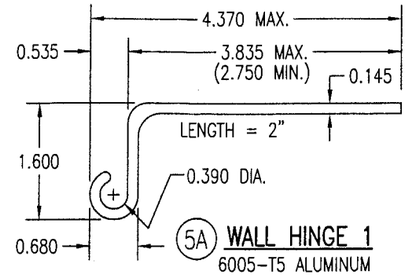

5A WALL HINGE 1
6005-T5 ALUMINUM
(USED WITH SINGLE PANEL)

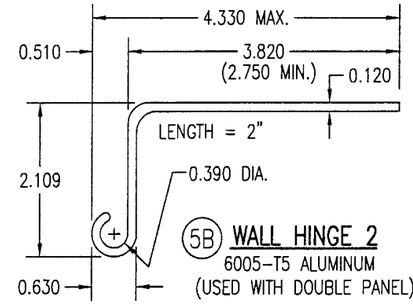

5B WALL HINGE 2
6005-T5 ALUMINUM
(USED WITH DOUBLE PANEL)

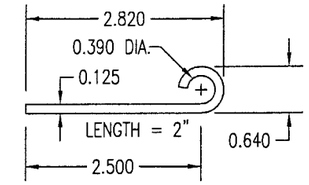

5C FLAT WALL HINGE
6005-T5 ALUMINUM

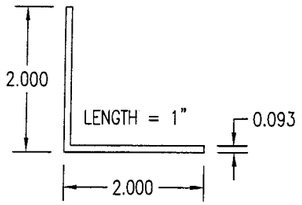

6 FRAME CORNER KEY
6063-T5 ALUMINUM

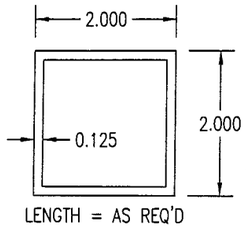

7 STORM BAR "A"
6061-T6 OR 6005-T5
ALUMINUM

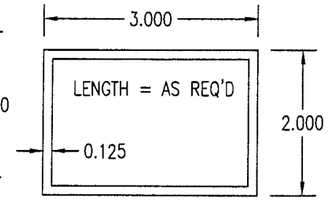

8 STORM BAR "B"
6061-T6 OR 6005-T5
ALUMINUM

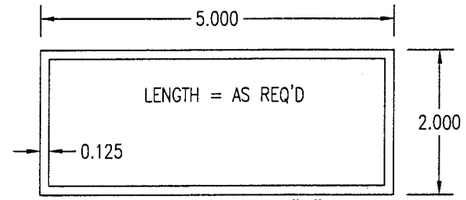

10 STORM BAR "D"
6061-T6 OR 6005-T5
ALUMINUM

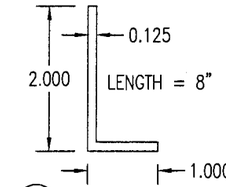

11 HURRICANE CLIP
6063-T5 ALUMINUM

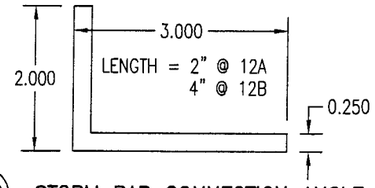

12A 12B STORM BAR CONNECTION ANGLE
6063-T5 ALUMINUM

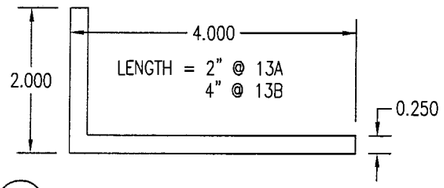

13A 13B STORM BAR CONNECTION ANGLE
6063-T5 ALUMINUM

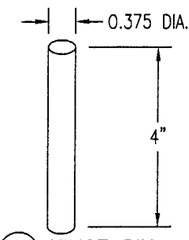

16 HINGE PIN
6063-T5 ALUMINUM

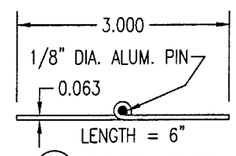

17 PANEL HINGE
6063-T5 ALUMINUM

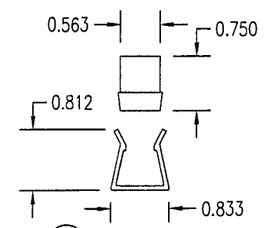

33 WALL CLIP
6063-T5 ALUMINUM "t" = 0.035"
NYLON "t" = 0.090"

MATERIAL LIST

NO.	DESCRIPTION	NOTES
1	SHUTTER FRAME	6063-T6 ALUMINUM
2	FRAME CAP	6063-T6 ALUMINUM
3	Z-BLADE	6063-T6 ALUMINUM
4	HOLLOW BLADE	6063-T6 ALUMINUM
5A	WALL HINGE TYPE 1	6005-T5 ALUMINUM; USED WITH SINGLE PANELS
5B	WALL HINGE TYPE 2	6005-T5 ALUMINUM; USED WITH DOUBLE HINGED PANELS
5C	FLAT WALL HINGE	6005-T5 ALUMINUM; FASTENS TO SHUTTER FRAME
6	L2X2X0.093 FRAME CORNER KEY	6063-T5 ALUMINUM; PLACED AT EA. FRAME CORNER
7	TS2X2X1/8 STORM BAR	6061-T6 OR 6005-T5 ALUMINUM
8	TS3X2X1/8 STORM BAR	6061-T6 OR 6005-T5 ALUMINUM
10	TS5X2X1/8 STORM BAR	6061-T6 OR 6005-T5 ALUMINUM
11	L2X1X1/8 HURRICANE CLIP 8" LONG	6063-T5 ALUMINUM; LOCKS SHUTTERS CLOSED
12A	L3X2X1/4 STORM BAR END CONNECTOR	6063-T5 ALUMINUM; 2" LONG; USED WITH-OUT BUILD-OUT
12B	L3X2X1/4 STORM BAR END CONNECTOR	6063-T5 ALUMINUM; 4" LONG; USED WITH-OUT BUILD-OUT
13A	L4X2X1/4 STORM BAR END CONNECTOR	6063-T5 ALUMINUM; 2" LONG; USED WITH BUILD-OUT
13B	L4X2X1/4 STORM BAR END CONNECTOR	6063-T5 ALUMINUM; 4" LONG; USED WITH BUILD-OUT
14	OPEN	
15	OPEN	
16	3/8" DIA. X 4" LONG HINGE PIN	6063-T5 ALUMINUM

NO.	DESCRIPTION	NOTES
17	SHUTTER PANEL HINGE	6063-T5 ALUMINUM; 6" LONG PIANO HINGE
18	0.050" THICK ALUMINUM HURRICANE SHEET	3003-H14 ALUMINUM; CUT TO FRAME SIZE
19	1/4" STL BOLT OR THREADED ROD W/WING NUT	NOT REQ'D AT SINGLE BAR SHUTTERS
20	1/4" MOLLY JACK NUT OR 6061-T6 RIVNUT	FOR HURRICANE CLIP BOLTS & STORM BAR THROUGH BOLTS
21	3/16" 5052 ALUMINUM POP RIVETS	POSITIONED AT FRAME CORNERS & 6" MAX. O.C.
22	NO. 6 X 5/8" S/STL SMS SCREWS	6 PER PIANO HINGE (3 PER HINGE LEAF)
23	NO. 6 X 5/8" S/STL SMS SCREWS	4 PER WALL HINGE INTO SHUTTER FRAME
24	1/4" X 1" STEEL BOLT OR WING BOLT	4 PER HURRICANE CLIP INTO SHUTTER RIVNUTS
25A	NO. 6 X 5/8" S/STL P.H. SMS	SECURES Z-BLADE END TO FRAME CAP (2 PER BLADE END)
25B	NO. 8 X 5/8" S/STL P.H. SMS	HOLLOW BLADE END TO FRAME CAP (2 PER BLADE END)
26A	1/4" X MIN. 1 3/4" TAPCON BY ITW	2 PER WALL HINGE INTO BLOCK/CONCR. WALL MIN. 1 3/4"
26B	NO. 12 X MIN 2" S/STL SMS	2 PER WALL HINGE INTO WOOD FRAMING MIN. 1 1/2"
27	NO. 6 X 1 3/4" S/STL F.H. SMS	2 PER FRAME CORNER INTO CORNER KEY
28	NO. 6 X 5/8" S/STL F.H. SMS	1 PER FRAME CORNER INTO FRAME SCREW BOSS
29	1/4" X MIN. 3" STL. BOLT W/WING NUT	1 PER STORM BAR END THROUGH END ANGLES & BAR
30A	1/4-20 RAWL CAULK-IN	EMBED FULL ANCHOR BODY INTO BLOCK/CONCR.
30B	1/4-20 MALE OR FEMALE PANEL MATE	EMBED MIN. 1 5/8" INTO WOOD & 1 1/2" INTO BLOCK/CONC.
31	1/4" STL BOLT OR THREADED ROD W/ WINGNUT	ANCHORS STORM BAR ENDS TO WALL ANCHORS
32	1/4-20 STEEL BOLT	ANCHORS STORM BAR END CLIPS TO WALL ANCHORS
33	6063-T6 ALUMINUM OR NYLON WALL CLIP	ONE BETWEEN EACH WALL HINGE (31" O.C. MAX.)

NOTE: ALL DETAILS ARE DRAWN TO 1/2 FULL SIZE UNLES NOTED OTHERWISE.

PRODUCT REVISED
as complying with the Florida Building Code
Acceptance No 04-0325.02
Expiration Date 05/06/2009
By Helmy A. Abdelsalam
Miami Dade Product Control Division

NO.	REVISION DESCRIPTION	BY	DATE

DRAWN BY: W.W.S. | CHECKED BY: W.W.S.
PLOT: 1=2 | DATE: 01/10/01

(DADE)

DRAWING TITLE
IMPACT COLONIAL SHUTTERS

MANUFACTURER
GULFSTREAM ALUMINUM & SHUTTER CORP.
3001 S.E. GRAN PARK WAY
STUART, FLORIDA 34997
(772) 287-6476

CONSULTANTS
W. W. SCHAEFER ENGINEERING & CONSULTING, P.A.
8895 N. MILITARY TRAIL; SUITE C-204
PALM BEACH GARDENS, FL 33410
PHONE: 561-775-4902 FAX: 561-775-4903

CERTIFICATION
MAR 18 2004
WARREN W. SCHAEFER, P.E.
P.E. NO. 44135

DRAWING NO. 1000 | REV.
SHEET NO. 4 OF 7

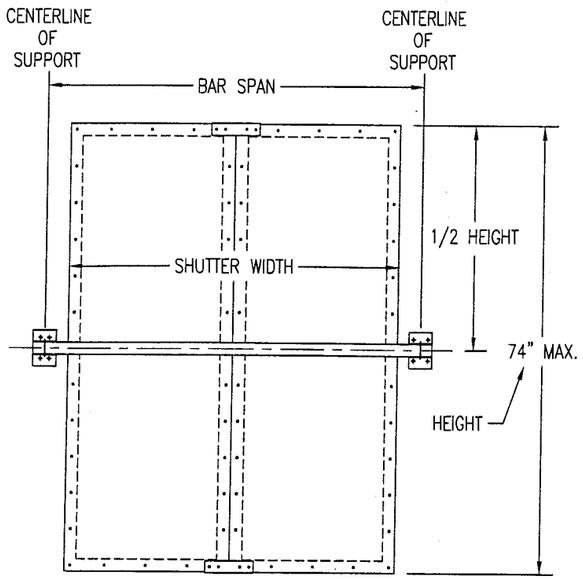

SINGLE BAR

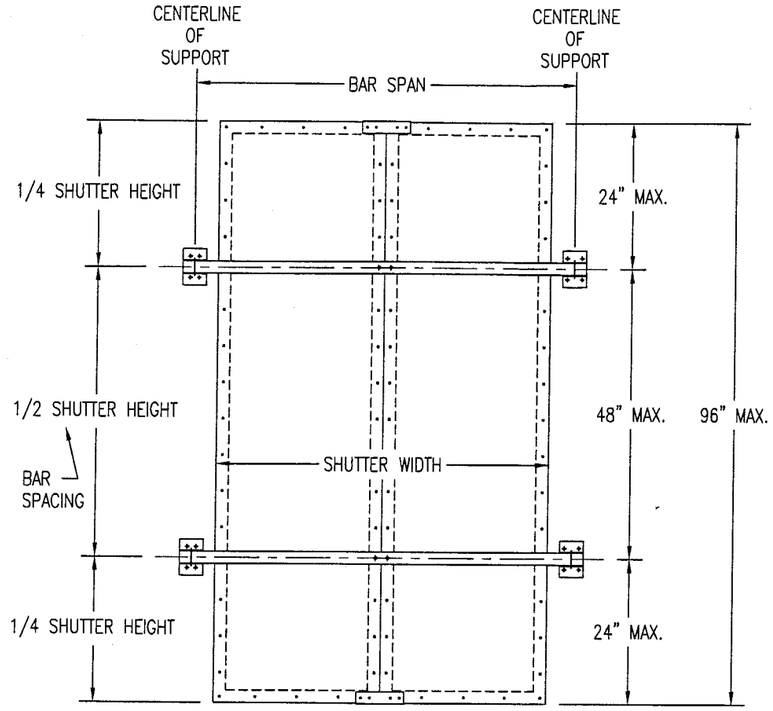

TWO BARS

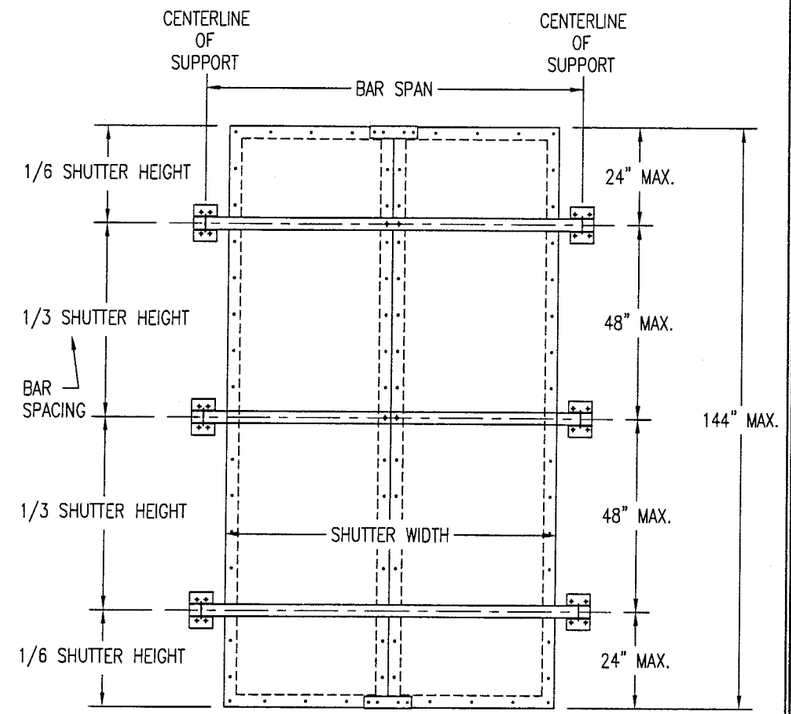

THREE BARS

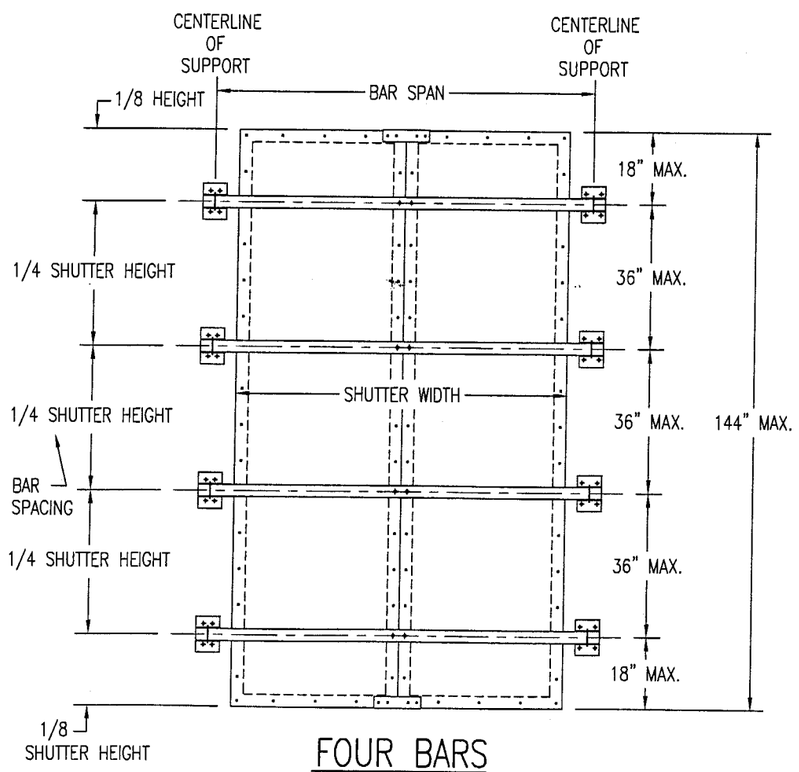

FOUR BARS

ALLOWABLE PRESSURE TABLE FOR SINGLE BAR SHUTTERS

SHUTTER HEIGHT	PRESSURE (PSF)	
	POSITIVE	NEGATIVE
54" & LESS	80.0	80.0
56"	77.0	77.0
58"	74.0	74.0
60"	71.0	71.0
62"	68.0	68.0
64"	65.0	65.0
66"	60.0	60.0
68"	55.0	55.0
70"	49.7	50.0
72"	44.4	45.0
74"	39.8	40.0

PRESSURE TABLE NOTES:

1. THE SHUTTER MUST BE PLACED A MIN. DISTANCE OF 2.125" AWAY FROM THE GLASS.
2. SEE INSTRUCTIONS ON SHEET 7 FOR USE OF ALL LOAD TABLES.

PRODUCT REVISED
as complying with the Florida Buiding Code
Acceptance No 04-0325.02
Expiration Date 05/06/2009
By Helmy A. Mahler
Miami Dade Product Control Division

DRAWN BY: W.W.S.	CHECKED BY: W.W.S.
PLOT: 1=24	DATE: 01/10/01

NO.	REVISION DESCRIPTION	BY	DATE

(DADE)

MANUFACTURER
GULFSTREAM ALUMINUM & SHUTTER CORP.
3001 S.E. GRAN PARK WAY
STUART, FLORIDA 34997
(772) 287-6476

DRAWING TITLE
IMPACT COLONIAL SHUTTERS

CONSULTANTS
W. W. SCHAEFER ENGINEERING & CONSULTING, P.A.
8895 N. MILITARY TRAIL; SUITE C-204
PALM BEACH GARDENS, FL 33410
PHONE: 561-775-4902 FAX: 561-775-4903

CERTIFICATION
MAR 18 2004
WARREN W. SCHAEFER, P.E.
P.E. NO. 44135

DRAWING NO. 1000 | REV.

SHEET NO. 5 OF 7

PRESSURE LOAD TABLE FOR STORM BARS & BAR END CONNECTIONS

SHUTTER WIDTH (IN)	HEIGHT OR BAR SPACING (IN) *	ALLOWABLE PRESSURES (PSF) FOR BARS			ALLOWABLE PRESSURE (PSF) AS CONTROLLED BY CONNECTIONS		
		TS2X2X1/8	TS3X2X1/8	TS5X2X1/8	CONN "A"	CONN "B" & "C"	
					WOOD/BLOCK/CONC.	WOOD	BLOCK/CONC.
36	48	80	80	80	80	80	80
	54	80	80	80	80	80	78
	60	80	80	80	80	80	70
	66	80	80	80	80	80	64
	72	80	80	80	80	78	58
	74	80	80	80	80	76	57
42	42	80	80	80	80	80	80
	48	80	80	80	80	80	71
	54	80	80	80	80	80	67
	60	80	80	80	80	80	60
	66	79	80	80	80	73	55
	72	72	80	80	80	67	50
	74	70	80	80	80	65	49
48	36	80	80	80	80	80	80
	42	80	80	80	80	80	71
	48	80	80	80	80	80	62
	54	77	80	80	80	78	58
	60	70	80	80	80	70	53
	66	63	80	80	80	64	48
	72	58	80	80	80	58	44
	74	56	80	80	80	57	43
54	30	80	80	80	80	80	80
	36	80	80	80	80	80	73
	42	77	80	80	80	80	63
	48	67	80	80	80	73	55
	54	60	80	80	80	69	52
	60	54	80	80	80	62	47
	66	49	80	80	80	56	43
	72	45	80	80	80	52	39
	74	43	80	80	78	50	38
60	24	80	80	80	80	80	80
	30	70	80	80	80	80	80
	36	62	80	80	80	80	66
	42	53	80	80	80	75	57
	48	47	80	80	80	66	50
	54	42	80	80	80	62	47
	60	37	80	80	80	56	42
	66	34	78	80	79	51	38
	72	31	72	80	73	47	35
	74	30	70	80	71	45	34
66	24	67	80	80	80	80	80
	30	54	80	80	80	80	72
	36	45	80	80	80	80	60
	42	39	80	80	80	68	51
	48	34	80	80	80	60	45
	54	30	80	80	80	56	43
	60	–	73	80	79	51	38
	66	–	66	80	72	46	35
	72	–	61	80	66	42	32
	74	–	59	80	64	41	31

PRESSURE LOAD TABLE FOR STORM BARS & BAR END CONNECTIONS

SHUTTER WIDTH (IN)	HEIGHT OR BAR SPACING (IN)	ALLOWABLE PRESSURES (PSF) FOR BARS			ALLOWABLE PRESSURE (PSF) AS CONTROLLED BY CONNECTIONS		
		TS2X2X1/8	TS3X2X1/8	TS5X2X1/8	CONN "A"	CONN "B" & "C"	
					WOOD/BLOCK/CONC.	WOOD	BLOCK/CONC.
72	24	50	80	80	80	80	80
	30	40	80	80	80	80	66
	36	33	80	80	80	73	55
	42	–	77	80	80	63	47
	48	–	67	80	80	55	41
	54	–	60	80	80	52	39
	60	–	54	80	73	47	35
	66	–	49	80	66	42	32
	72	–	45	80	60	39	29
	74	–	44	80	59	38	–
78	24	–	80	80	80	80	76
	30	–	80	80	80	80	61
	36	–	68	80	80	67	51
	42	–	58	80	80	58	44
	48	–	51	80	79	51	38
	54	–	45	80	74	48	36
	60	–	41	80	67	43	32
	66	–	37	80	61	39	29
	72	–	34	80	56	36	–
	74	–	33	80	54	35	–
84	24	–	78	80	80	80	71
	30	–	62	80	80	75	57
	36	–	52	80	80	63	47
	42	–	44	80	80	54	40
	48	–	39	80	73	47	35
	54	–	35	80	69	44	33
	60	–	31	80	62	40	30
	66	–	–	80	57	36	–
	72	–	–	80	52	33	–
	74	–	–	80	50	32	–
90	24	–	61	80	80	80	66
	30	–	49	80	80	70	53
	36	–	41	80	80	58	44
	42	–	35	80	78	50	38
	48	–	30	80	68	44	33
	54	–	–	80	64	41	31
	60	–	–	80	58	37	–
	66	–	–	80	53	34	–
	72	–	–	74	48	31	–
	74	–	–	72	47	30	–

LOAD TABLE CONTINUED ON SHEET 7

NOTE: SEE INSTRUCTIONS ON SHEET 7 FOR USE OF ALL LOAD TABLES!

1. ALL PRESSURES ARE FOR BOTH POSITIVE & NEGATIVE AND ARE PSF.
2. PRESSURES ARE LIMITED TO MAX. 80 PSF AS CONTROLLED BY TESTING.
3. REF. SHEET 3 FOR CONNECTION TYPES.
4. THE SHUTTERS MUST BE POSITIONED MINIMUM 2.125" FROM THE GLASS THEY PROTECT.

* MAXIMUM SHUTTER HEIGHT A SINGLE STORM BAR SHUTTER IS 74".
MAXIMUM BAR SPACING FOR A MULTI STORM BAR SHUTTER IS 48".

PRODUCT REVISED
as complying with the Florida Building Code
Acceptance No 04-0325.02
Expiration Date 05/06/2009
By [signature]
Miami Dade Product Control Division

DRAWN BY: W.W.S.	CHECKED BY: W.W.S.
PLOT: 1=1	DATE: 01/10/01

NO.	REVISION DESCRIPTION	BY	DATE

DRAWING TITLE
IMPACT COLONIAL SHUTTERS

(DADE)

MANUFACTURER
GULFSTREAM ALUMINUM & SHUTTER CORP.
3001 S.E. GRAN PARK WAY
STUART, FLORIDA 34997
(772) 287-6476

CONSULTANTS
W. W. SCHAEFER ENGINEERING & CONSULTING, P.A.
8895 N. MILITARY TRAIL; SUITE C-204
PALM BEACH GARDENS, FL 33410
PHONE: 561-775-4902 FAX: 561-775-4903

CERTIFICATION
MAR 18 2004
WARREN W. SCHAEFER, P.E.
P.E. NO. 44135

DRAWING NO. 1000
REV.
SHEET NO. 6 OF 7

PRESSURE LOAD TABLE FOR STORM BARS & BAR END CONNECTIONS

SHUTTER WIDTH (IN)	HEIGHT OR BAR SPACING (IN)	ALLOWABLE PRESSURES (PSF) FOR BARS			ALLOWABLE PRESSURE (PSF) AS CONTROLLED BY CONNECTIONS		
		TS2X2X1/8	TS3X2X1/8	TS5X2X1/8	CONN "A"	CONN "B" & "C"	
					WOOD/BLOCK/CONC.	WOOD	BLOCK/CONC.
96	24	–	48	80	80	80	62
	30	–	39	80	80	66	50
	36	–	32	80	80	55	41
	42	–	–	80	73	47	35
	48	–	–	80	64	41	31
	54	–	–	78	60	39	29
	60	–	–	70	54	35	–
	66	–	–	64	49	32	–
	72	–	–	58	45	29	–
	74	–	–	57	44	–	–
102	24	–	39	80	80	77	58
	30	–	31	80	80	62	47
	36	–	–	80	80	52	39
	42	–	–	80	69	44	33
	48	–	–	70	60	39	29
	54	–	–	62	57	37	–
	60	–	–	56	51	33	–
	66	–	–	51	47	30	–
	72	–	–	47	43	27	–
	74	–	–	45	42	–	–
108	24	–	31	80	80	73	55
	30	–	–	80	80	58	44
	36	–	–	76	76	49	37
	42	–	–	65	65	42	31
	48	–	–	57	57	37	28
	54	–	–	51	54	35	–
	60	–	–	46	48	31	–
	66	–	–	41	44	28	–
	72	–	–	38	40	–	–
	74	–	–	37	39	–	–
112	24	–	–	80	80	70	53
	30	–	–	80	80	56	42
	36	–	–	66	73	47	35
	42	–	–	57	63	40	30
	48	–	–	50	55	35	–
	54	–	–	44	52	33	–
	60	–	–	40	47	30	–
	66	–	–	36	42	27	–
	72	–	–	33	39	–	–
	74	–	–	32	38	–	–

LOAD TABLE INSTRUCTIONS:

1. DETERMINE THE SIZE OF THE SHUTTER.
2. DETERMINE WHAT THE REQUIRED DESIGN POSITIVE & NEGATIVE WIND LOADS ARE FOR THE SHUTTER.
3. IF THE SHUTTER HEIGHT IS 74" OR LESS, GO TO THE PRESSURE TABLE ON SHEET 5. IF THE REQUIRED LOADS ARE LESS THAN OR EQUAL TO THOSE IN THE TABLE, ONLY ONE BAR IS REQUIRED (USE THE PRESSURE TABLE ON SHEET 5). IF NOT, MORE THAN ONE BAR IS REQUIRED.
4. IF THE SHUTTER HEIGHT IS GREATER THAN 74", DO NOT USE THE TABLE ON SHEET 5 & GO TO THE STORM BAR LOAD TABLES ON SHEETS 6 & 7.
5. IF ONLY ONE BAR IS REQUIRED, GO TO THE STORM BAR LOAD TABLES ON SHEETS 6 & 7. FIND THE APPLICABLE SHUTTER WIDTH IN THE 1ST COLUMN & SHUTTER HEIGHT IN THE 2ND COLUMN. GO ACROSS THE STORM BAR COLUMNS UNTIL YOU HAVE A BAR WHICH MEETS THE REQUIRED PRESSURE. THEN GO ACROSS THE CONNECTION COLUMNS UNTIL YOU HAVE A CONNECTION THAT MEETS THE REQUIRED PRESSURE. USE THAT BAR & THAT CONNECTION. NOTE THAT IF YOU DECIDE THAT THE BAR &/OR CONNECTION IS TOO LARGE FOR YOUR LIKING, ADD A BAR & GO TO INSTRUCTION NUMBER 6 BELOW.
6. IF MORE THAN ONE BAR IS REQUIRED, GO TO THE STORM BAR LOAD TABLES ON SHEETS 6 & 7. FIND THE APPLICABLE SHUTTER WIDTH IN THE 1ST COLUMN & STORM BAR SPACING IN THE 2ND COLUMN. GO ACROSS THE STORM BAR COLUMNS UNTIL YOU HAVE A BAR WHICH MEETS THE REQUIRED PRESSURE. THEN GO ACROSS THE CONNECTION COLUMNS UNTIL YOU HAVE A CONNECTION THAT MEETS THE REQUIRED PRESSURE. USE THAT BAR & THAT CONNECTION. NOTE THAT IF YOU DECIDE THAT THE BAR &/OR CONNECTION IS TOO LARGE FOR YOUR LIKING, ADD ANOTHER BAR & START AGAIN WITH INSTRUCTION NUMBER 6.

NOTE THAT WHEN MORE THAN ONE BAR IS USED WITH ONE SHUTTER, THE MAXIMUM BAR SPACING MAY NOT EXCEED 48".

PRODUCT REVISED
as complying with the Florida
Building Code
Acceptance No 04-0325.02
Expiration Date 05/06/2009
By
Miami Dade Product Control
Division

DRAWN BY: W.W.S.	CHECKED BY: W.W.S.
PLOT: 1=1	DATE: 01/10/01

NO.	REVISION DESCRIPTION	BY	DATE

(DADE)

DRAWING TITLE
IMPACT COLONIAL SHUTTERS

MANUFACTURER
GULFSTREAM ALUMINUM & SHUTTER CORP.
3001 S.E. GRAN PARK WAY
STUART, FLORIDA 34997
(772) 287-6476

CONSULTANTS
W. W. SCHAEFER ENGINEERING & CONSULTING, P.A.
8895 N. MILITARY TRAIL; SUITE C-204
PALM BEACH GARDENS, FL 33410
PHONE: 561-775-4902 FAX: 561-775-4903

CERTIFICATION
MAR 18 2004
WARREN W. SCHAEFER, P.E.
P.E. NO. 44135

DRAWING NO. 1000 REV.

SHEET NO. 7 OF 7