MIAMI-DADE

BUILDING CODE COMPLIANCE OFFICE (BCCO)
PRODUCT CONTROL DIVISION

MIAMI-DADE COUNTY, FLORIDA
METRO-DADE FLAGLER BUILDING
140 WEST FLAGLER STREET, SUITE 1603
MIAMI, FLORIDA 33130-1563
(305) 375-2901 FAX (305) 375-2908

NOTICE OF ACCEPTANCE (NOA)

R.C. Aluminum Industries, Inc.
2085 NW 75th Ave
Miami, FL 33122

SCOPE:

This NOA is being issued under the applicable rules and regulations governing the use of construction materials. The documentation submitted has been reviewed by Miami-Dade County Product Control Division and accepted by the Board of Rules and Appeals (BORA) to be used in Miami Dade County and other areas where allowed by the Authority Having Jurisdiction (AHJ).

This NOA shall not be valid after the expiration date stated below. The Miami-Dade County Product Control Division (In Miami Dade County) and/or the AHJ (in areas other than Miami Dade County) reserve the right to have this product or material tested for quality assurance purposes. If this product or material fails to perform in the accepted manner, the manufacturer will incur the expense of such testing and the AHJ may immediately revoke, modify, or suspend the use of such product or material within their jurisdiction. BORA reserves the right to revoke this acceptance, if it is determined by Miami-Dade County Product Control Division that this product or material fails to meet the requirements of the applicable building code.

This product is approved as described herein, and has been designed to comply with the Florida Building Code, including the High Velocity Hurricane Zone.

DESCRIPTION: Series RS -240 Aluminum Sliding Glass Door

APPROVAL DOCUMENT: Drawing No. **W03-101,** titled "Series –RS240 Alum Sliding Glass Door (L.M.I.)", sheets 1 through 7 of 7, prepared by AL-Farooq Corporation, dated 11/10/03, signed and sealed by Humayoun Farooq, P.E., bearing the Miami-Dade County Product Control Approval stamp with the Notice of Acceptance number and approval date by the Miami-Dade County Product Control Division.

MISSILE IMPACT RATING: Large and Small Missile Impact

LABELING: Each unit shall bear a permanent label with the manufacturer's name or logo, city, state and following statement: "Miami-Dade County Product Control Approved", unless otherwise noted herein.

RENEWAL of this NOA shall be considered after a renewal application has been filed and there has been no change in the applicable building code negatively affecting the performance of this product.

TERMINATION of this NOA will occur after the expiration date or if there has been a revision or change in the materials, use, and/or manufacture of the product or process. Misuse of this NOA as an endorsement of any product, for sales, advertising or any other purposes shall automatically terminate this NOA. Failure to comply with any section of this NOA shall be cause for termination and removal of NOA.

ADVERTISEMENT: The NOA number preceded by the words Miami-Dade County, Florida, and followed by the expiration date may be displayed in advertising literature. If any portion of the NOA is displayed, then it shall be done in its entirety.

INSPECTION: A copy of this entire NOA shall be provided to the user by the manufacturer or its distributors and shall be available for inspection at the job site at the request of the Building Official.
This NOA consists of this page 1 and evidence page E-1, as well as approval document mentioned above.
The submitted documentation was reviewed by **Theodore Berman, P.E.**

5/4/2004

PRODUCT CONTROL ACCEPTED

R.C. Aluminum Industries, Inc.

NOTICE OF ACCEPTANCE: EVIDENCE SUBMITTED

A. DRAWINGS

1. Manufacturer's die drawings and sections.
2. Drawing No. **W03-101,** titled Series –RS240 Alum Sliding Glass Door (L.M.I.)", sheets 1 through 7 of 7, prepared by AL-Farooq Corporation, dated 11/10/03, signed and sealed by Humayoun Farooq, P.E.

B. TESTS

1. Test reports on 1) Air Infiltration Test, per FBC, TAS 202-94
   2) Uniform Static Air Pressure Test, Loading per FBC, TAS 20294
   3) Water Resistance Test, per FBC, TAS 202-94
   4) Small Missile Impact Test per FBC, TAS 201-94
   5) Cyclic Wind Pressure Loading per FBC, TAS 203-94
   6) Forced Entry Test, per FBC 2411.3.2.1 and TAS 202-94

   along with marked-up drawings and installation diagram of an aluminum sliding glass door, prepared by Fenestration Testing Laboratories, Inc. Test Report No. **FTL-3825** dated 07/16/03, signed and sealed by Joseph C. Chan, P.E.

C. CALCULATIONS

1. Anchor Calculations, ASTME-1300, and structural analysis, prepared by AL-Farooq Corporation, dated 03/25/04, signed and sealed by Humayoun Farooq, P.E.

D. QUALITY ASSURANCE

1. Miami Dade Building Code Compliance Office (BCCO).

E. MATERIAL CERTIFICATIONS

1. Notice of Acceptance No. **00-1212.04** issued to " E.I. Dupont DeNemours" for " Dupont Butacite ® PVB" dated 02/15/01 and expiring on 12/11/05"

F. STATEMENTS

1. Statement letter of no financial interest, dated 03/24/04, signed and sealed by Humayoun Farooq, P.E.
2. Statement Letter of conformance dated 03/24/04, signed and sealed by Humayoun Farooq, P.E.

G. OTHER

1. Letter from consultant stating that the product is in compliance with the Florida Building Code (FBC).

Theodore Berman, P.E.
Deputy Director, Product Control Division
NOA No 04-0401.03
Expiration Date: May 27, 2009
Approval Date: May 27, 2004

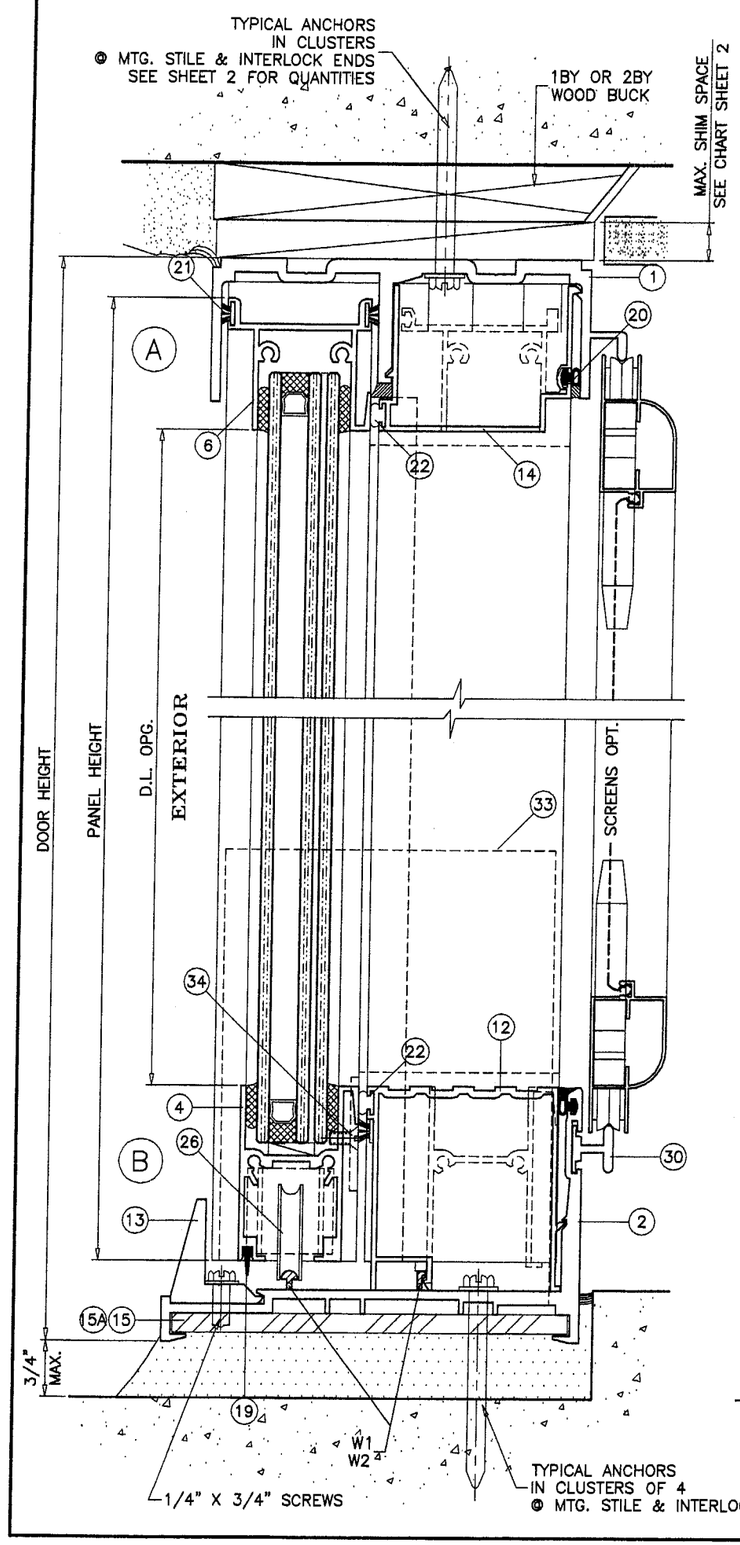

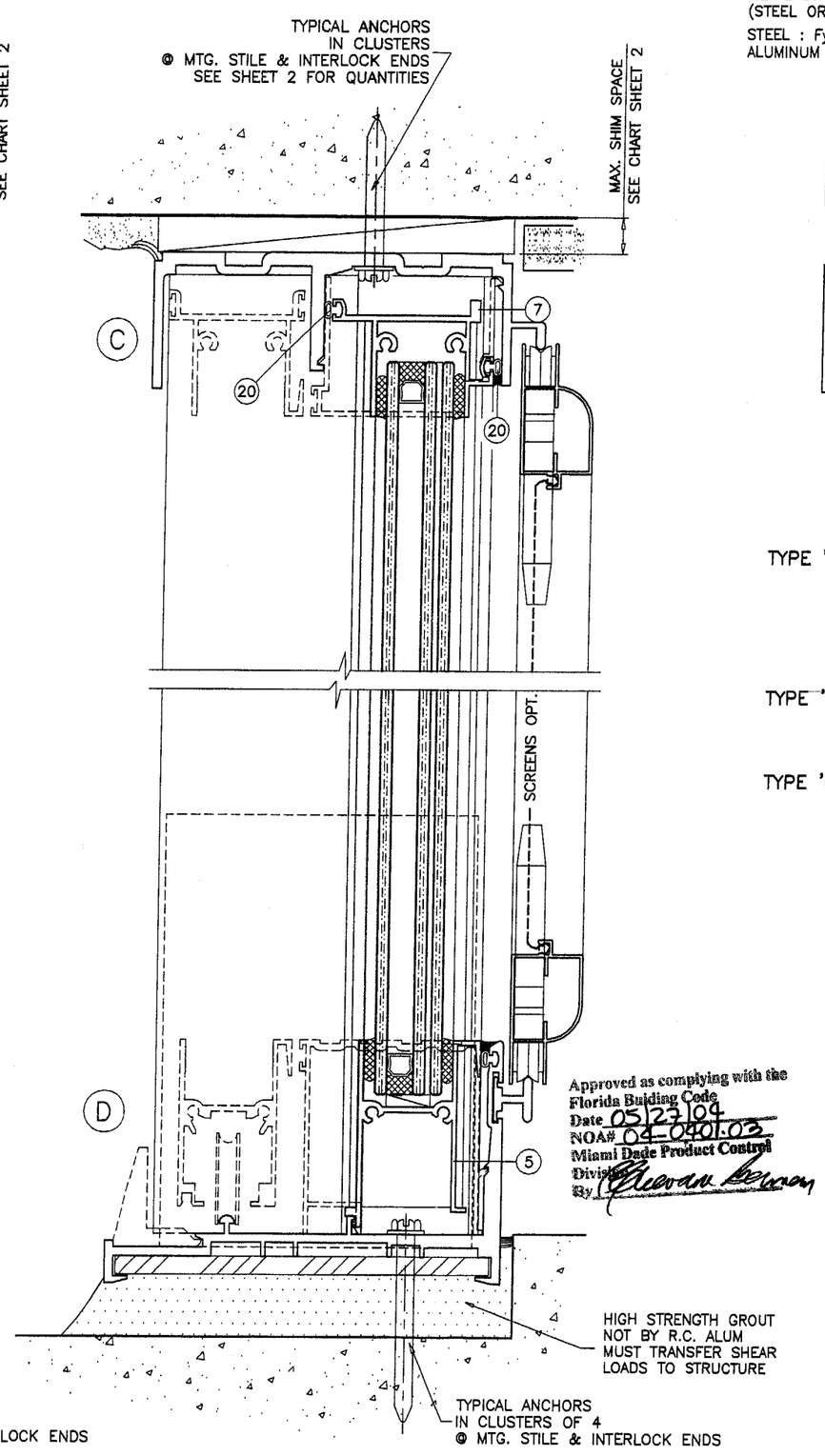

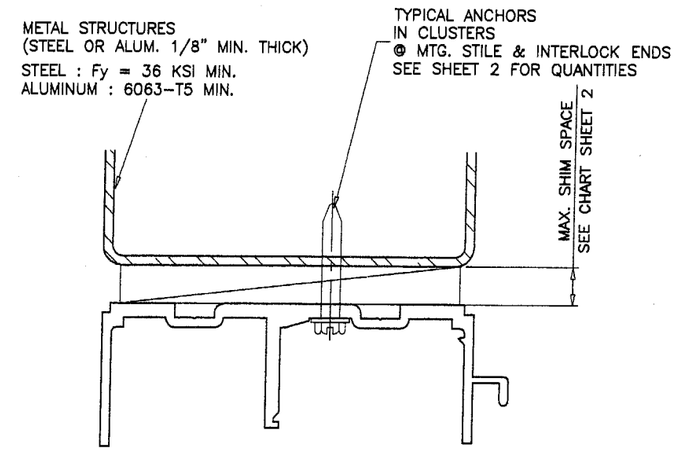

WOOD BUCKS NOT BY RC ALUMINUM, MUST SUSTAIN LOADS IMPOSED BY GLAZING SYSTEM AND TRANSFER THEM TO THE BUILDING STRUCTURE.

TYPICAL ANCHORS: SEE ELEV. FOR SPACING

TYPE 'A' 1/4" DIA. HILTI KWIK-CON II
INTO 2BY WOOD BUCKS OR WOOD STRUCTURES
1-1/2" MIN. WOOD PENETRATION
THRU 1BY WOOD BUCKS INTO MASONRY OR CONC.
1-1/4" MIN. EMBED INTO MASONRY OR CONC.

TYPE 'B' 1/4" DIA. HILTI KWIK-CON II
DIRECTLY INTO MASONRY OR CONCRETE
1-1/4" MIN. EMBED INTO CONCRETE

TYPE 'C' #14" TEKS OR SELF DRILLING SCREWS
INTO METAL STRUCTURES (1/8" MIN. THICKNESS)
INTO APPROVED MULLIONS (NO SHIM SPACE)

TYPICAL EDGE DISTANCE
INTO CONCRETE AND MASONRY = 3" MIN.
INTO WOOD STRUCTURE = 1" MIN.

SEALANTS:

ALL FRAME AND PANEL JOINT, INSTALLATION SCREWS AND HEADS OF ANCHOR SCREWS AT SILL TO BE SEALED WITH WHITE/ALUM COLORED SEALANT.

LOCKS:

SURFACE MOUNT THREE PLY HOOK LOCK BY 'WORLD INDUSTRIAL PRODUCTS' AT 41-1/2" FROM BOTTOM WITH KEEPERS AT LOCK POSITION.

WEEPS:

W1 = 2-1/2" WEEP NOTCH AT SILL CENTER
W2 = 7/8" NOTCH AT EACH END

Approved as complying with the Florida Building Code
Date 05/27/04
NOA# 04-0401.03
Miami Dade Product Control Division
By

Engr: DR. HUMAYOUN FAROOQ
STRUCTURES
FLA. PE # 16557
C.A.N. 3538

MAR 2 9 2004

AL-FAROOQ CORPORATION
ENGINEERS, PLANNERS & PRODUCT DESIGN
1235 SW 87 AVE
MIAMI, FLORIDA 33174
TEL. (305) 264-8100 FAX. (305) 262-6978
COMP-ANL\W03-101RC

SERIES-RS240 ALUM SLIDING GLASS DOOR (L.M.I.)

R.C. ALUMINUM INDUSTRIES INC.
2805 N.W. 75 TH AVE.
MIAMI, FL. 33122
TEL. (305) 592-1515 FAX. (305) 592-2184

revisions:

no	date	by	description

date: 11-10-03
scale: 1/2" = 1"
dr. by: HAMID
chk. by:

drawing no.
W03-101

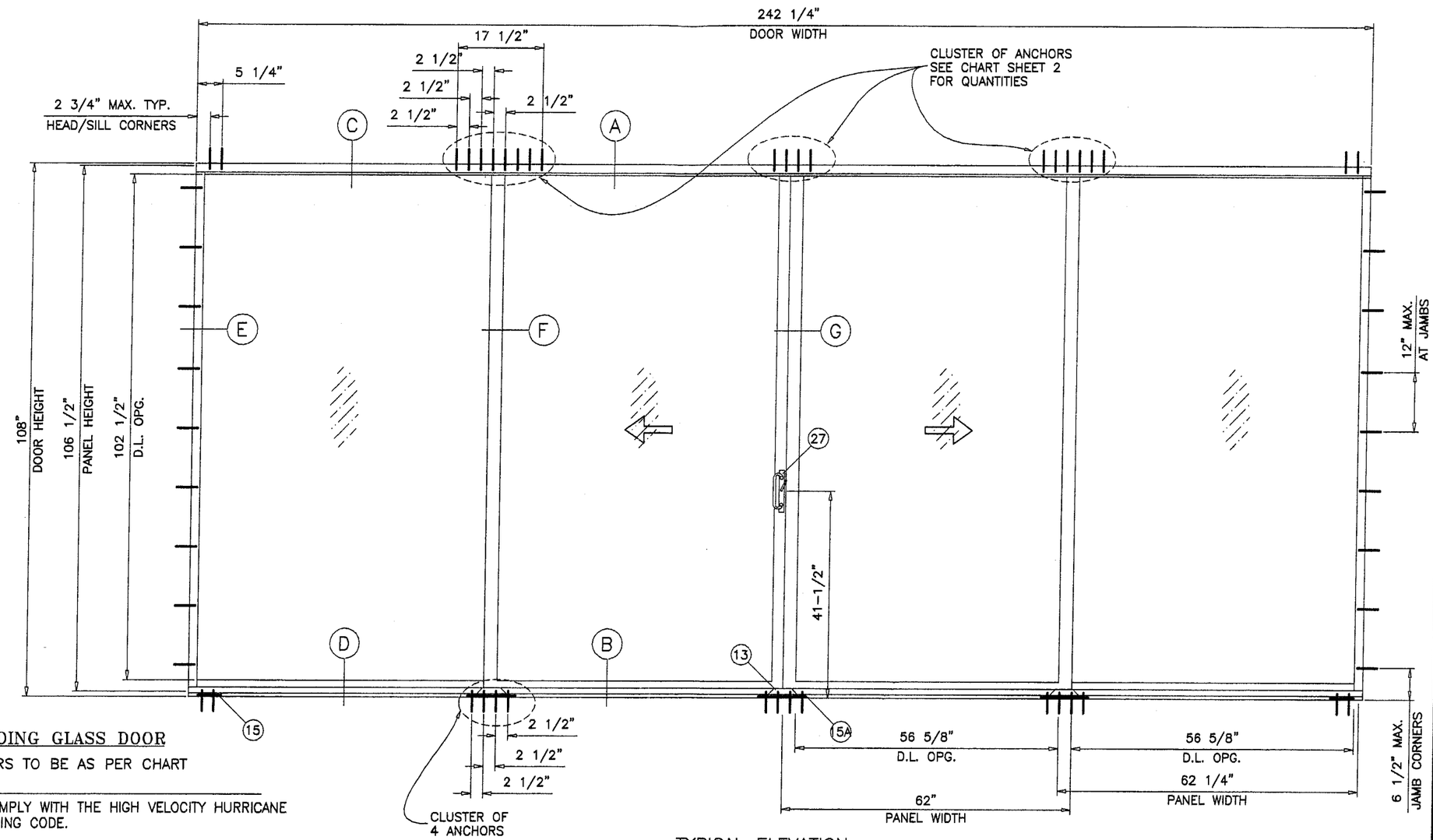

TYPICAL ELEVATION
TESTED UNIT

SERIES-RS240 ALUM SLIDING GLASS DOOR

DESIGN LOAD RATING FOR DOORS TO BE AS PER CHART SHOWN ON SHEET 2.

THIS PRODUCT IS DESIGNED TO COMPLY WITH THE HIGH VELOCITY HURRICANE ZONE OF THE 2001 FLORIDA BUILDING CODE.

WOOD BUCKS BY OTHERS, MUST BE ANCHORED PROPERLY TO TRANSFER LOADS TO THE STRUCTURE.

ANCHORS SHALL BE AS LISTED, SPACED AS SHOWN ON DETAILS. ANCHOR EMBEDMENT TO BASE MATERIAL SHALL BE BEYOND WALL DRESSING OR STUCCO.

ANCHORING OR LOADING CONDITIONS NOT SHOWN IN THESE DETAILS ARE NOT PART OF THIS APPROVAL.

DOORS GLAZED WITH LAMINATED GLASS RATED FOR LARGE MISSILE IMPACT AND REQUIRE NO SHUTTERS.

Approved as complying with the Florida Buiding Code
Date 05/27/04
NOA# 04-0401.03
Miami Dade Product Control Division
By Theodore Berman

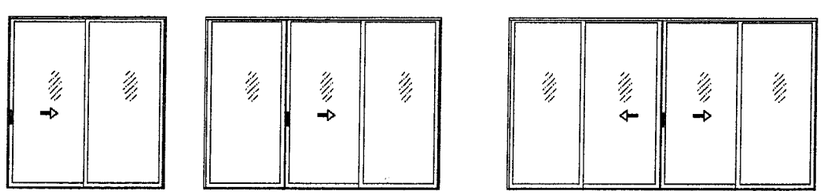

XO (SHOWN)
OX

OXO (SHOWN)

OXXO

APPROVED CONFIGURATIONS

TWO OR THREE TRACK FRAME DOOR CONFIGURATIONS OF MORE THAN FOUR PANELS USING STILE COMBINATIONS SHOWN IN THESE DETAILS MAY ALSO BE APPROVED (EXAMPLE OOXXOO).

Engr: DR. HUMAYOUN FAROOQ
STRUCTURES
FLA. PE # 16557
C.A.N. 3538

MAR 2 9 2004

AL-FAROOQ CORPORATION
ENGINEERS, PLANNERS & PRODUCT DESIGN
1235 SW 87 AVE
MIAMI, FLORIDA 33174
TEL. (305) 264-8100 FAX. (305) 262-6978
COMP-ANL\W03-101RC

SERIES-RS240 ALUM SLIDING GLASS DOOR (L.M.I.)

R.C. ALUMINUM INDUSTRIES INC.
2805 N.W. 75 TH AVE.
MIAMI, FL. 33122
TEL. (305) 592-1515 FAX. (305) 592-2184

revisions:

no	date	by	description

date: 11-10-03
scale: 1/2"=1'-0"
dr. by: HAMID
chk. by:

drawing no.
W03-101

DESIGN LOAD CAPACITY – PSF

PANEL WIDTH NOMINAL INCHES	DOOR HEIGHT INCHES	3/8" MAX. SHIM SPACE			1/2" MAX. SHIM SPACE						5/8" MAX. SHIM SPACE		
		CLUSTER OF 4 ANCHORS		CLUSTER OF 6	CLUSTER OF 4 ANCHORS			CLUSTER OF 6 ANCHORS			CLUSTER OF 6 ANCHORS		CLUSTER OF 8
		ANCHOR B	ANCHOR C	ANCHOR B & C	ANCHOR A	ANCHOR B	ANCHOR C	ANCHOR A	ANCHOR B	ANCHOR C	ANCHOR A & B	ANCHOR C	ANCHOR A, B & C
		EXT.(+) & INT.(−)	EXT.(+) & INT.(−)	EXT.(+) & INT.(−)	EXT.(+) & INT.(−)	EXT.(+) & INT.(−)	EXT.(+) & INT.(−)	EXT.(+) & INT.(−)	EXT.(+) & INT.(−)	EXT.(+) & INT.(−)	EXT.(+) & INT.(−)	EXT.(+) & INT.(−)	EXT.(+) & INT.(−)
30	96"	80.0	80.0	80.0	80.0	80.0	80.0	80.0	80.0	80.0	80.0	80.0	80.0
36		80.0	80.0	80.0	80.0	80.0	80.0	80.0	80.0	80.0	80.0	80.0	80.0
42		80.0	80.0	80.0	76.3	80.0	79.4	80.0	80.0	80.0	80.0	80.0	80.0
48		80.0	80.0	80.0	66.8	78.4	69.5	80.0	80.0	80.0	80.0	80.0	80.0
54		80.0	75.6	80.0	59.3	69.7	61.8	80.0	80.0	80.0	80.0	78.3	80.0
60		77.8	68.0	80.0	53.4	62.7	55.6	80.0	80.0	80.0	78.9	70.5	80.0
66"		70.7	61.8	80.0	48.5	57.0	50.5	72.8	80.0	75.8	71.7	64.1	80.0
30	102"	80.0	80.0	80.0	80.0	80.0	80.0	80.0	80.0	80.0	80.0	80.0	80.0
36		80.0	80.0	80.0	80.0	80.0	80.0	80.0	80.0	80.0	80.0	80.0	80.0
42		80.0	80.0	80.0	71.8	80.0	74.8	80.0	80.0	80.0	80.0	80.0	80.0
48		80.0	80.0	80.0	62.8	73.8	65.4	80.0	80.0	80.0	80.0	80.0	80.0
54		80.0	71.1	80.0	55.8	65.6	58.1	80.0	80.0	80.0	80.0	73.7	80.0
60		73.2	64.0	80.0	50.3	59.0	52.3	75.4	80.0	78.5	74.3	66.4	80.0
30	108"	80.0	80.0	80.0	80.0	80.0	80.0	80.0	80.0	80.0	80.0	80.0	80.0
36		80.0	80.0	80.0	79.1	80.0	80.0	80.0	80.0	80.0	80.0	80.0	80.0
42		80.0	80.0	80.0	67.8	79.6	70.6	80.0	80.0	80.0	80.0	80.0	80.0
48		80.0	75.6	80.0	59.3	69.7	61.8	80.0	80.0	80.0	80.0	78.3	80.0
54		76.8	67.2	80.0	52.7	61.9	54.9	79.1	80.0	80.0	77.9	69.6	80.0
60		69.2	60.4	80.0	47.5	55.7	49.4	71.2	80.0	74.1	70.1	62.7	80.0

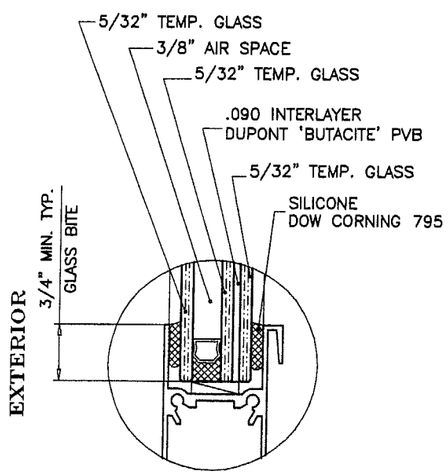

GLAZING DETAIL

Approved as complying with the
Florida Buiding Code
Date 05/27/04
NOA# 04-0401.03
Miami Dade Product Control
Division
By Geordie Borman

Engr: DR. HUMAYOUN FAROOQ
STRUCTURES
FLA. PE # 16557
C.A.N. 3538

MAR 2 9 2004

AL-FAROOQ CORPORATION
ENGINEERS, PLANNERS & PRODUCT DESIGN
1235 SW 87 AVE
MIAMI, FLORIDA 33174
TEL. (305) 264-8100 FAX. (305) 262-6978
COMP-ANL\W03-101RC

SERIES-RS240 ALUM SLIDING GLASS DOOR (L.M.I.)

R.C. ALUMINUM INDUSTRIES INC.
2805 N.W. 75 TH AVE.
MIAMI, FL. 33122
TEL. (305) 592-1515 FAX. (305) 592-2184

revisions:

no	date	by	description

date: 11-10-03
scale: 1/2" = 1"
dr. by: HAMID
chk. by:

drawing no.
W03-101

WOOD BUCKS AND METAL STRUCTURES NOT BY RC ALUMINUM MUST SUPPORT LOADS IMPOSED BY GLAZING SYSTEM AND TRANSFER THEM TO THE BUILDING STRUCTURE.

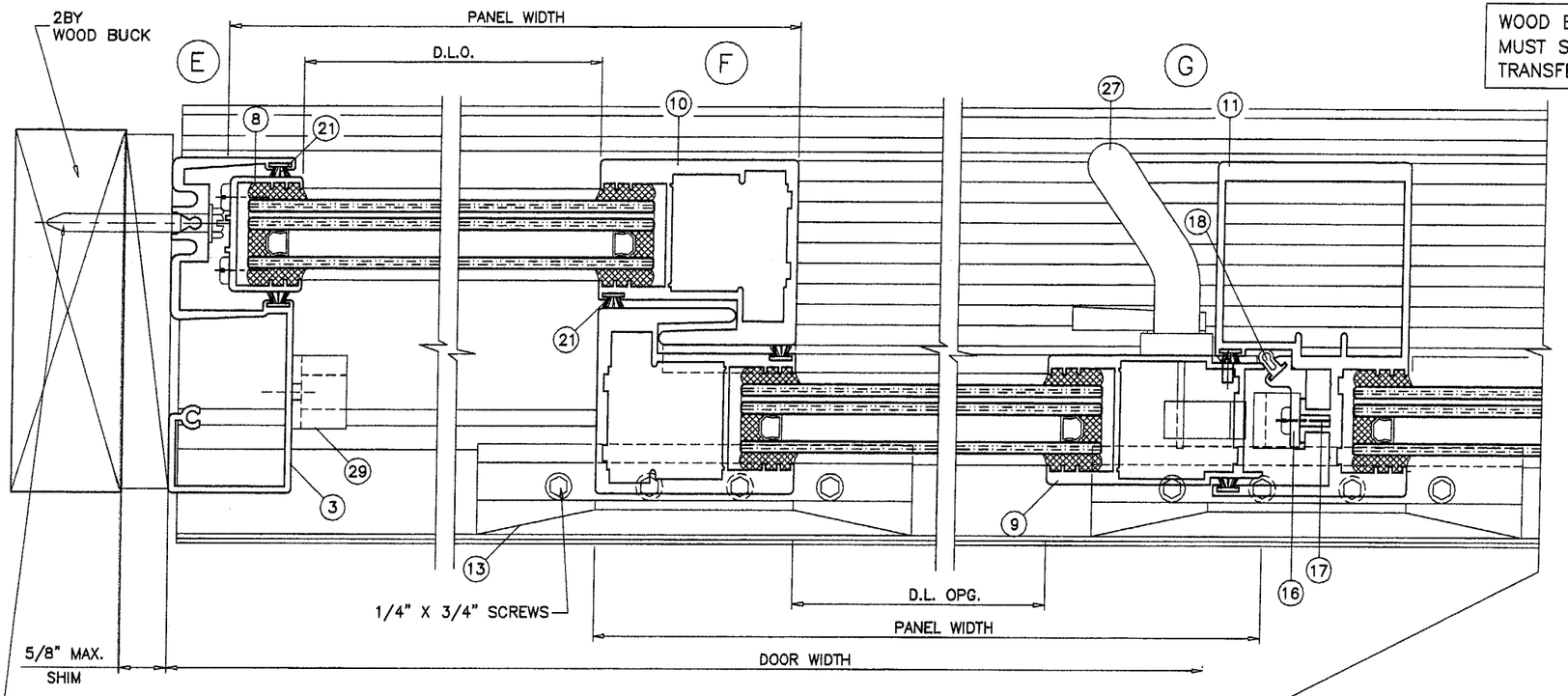

EXTERIOR

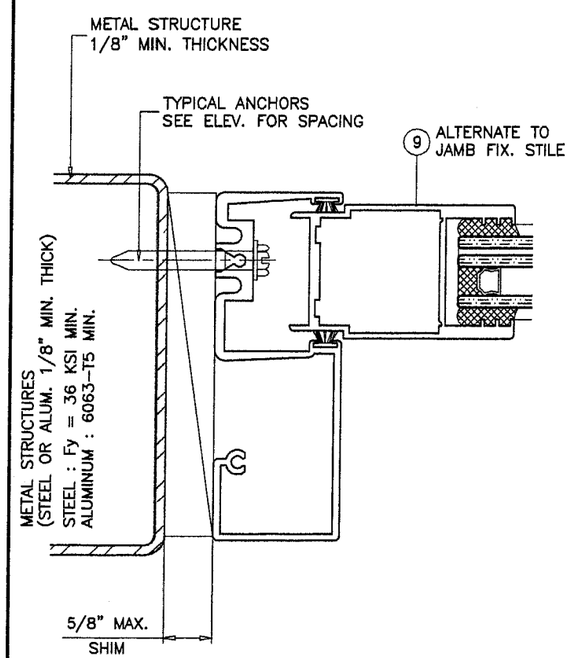

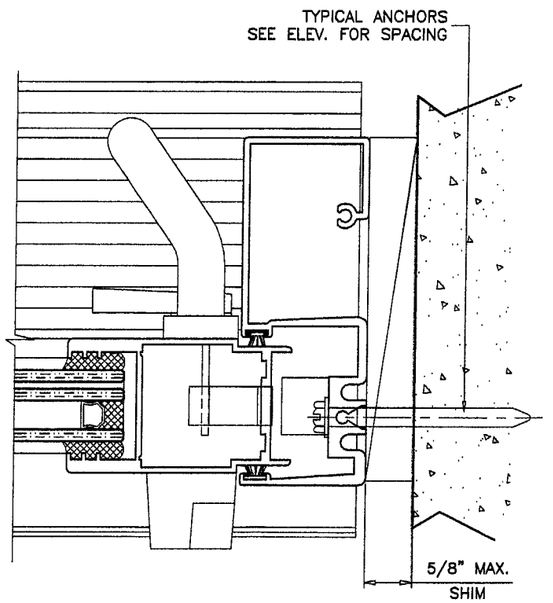

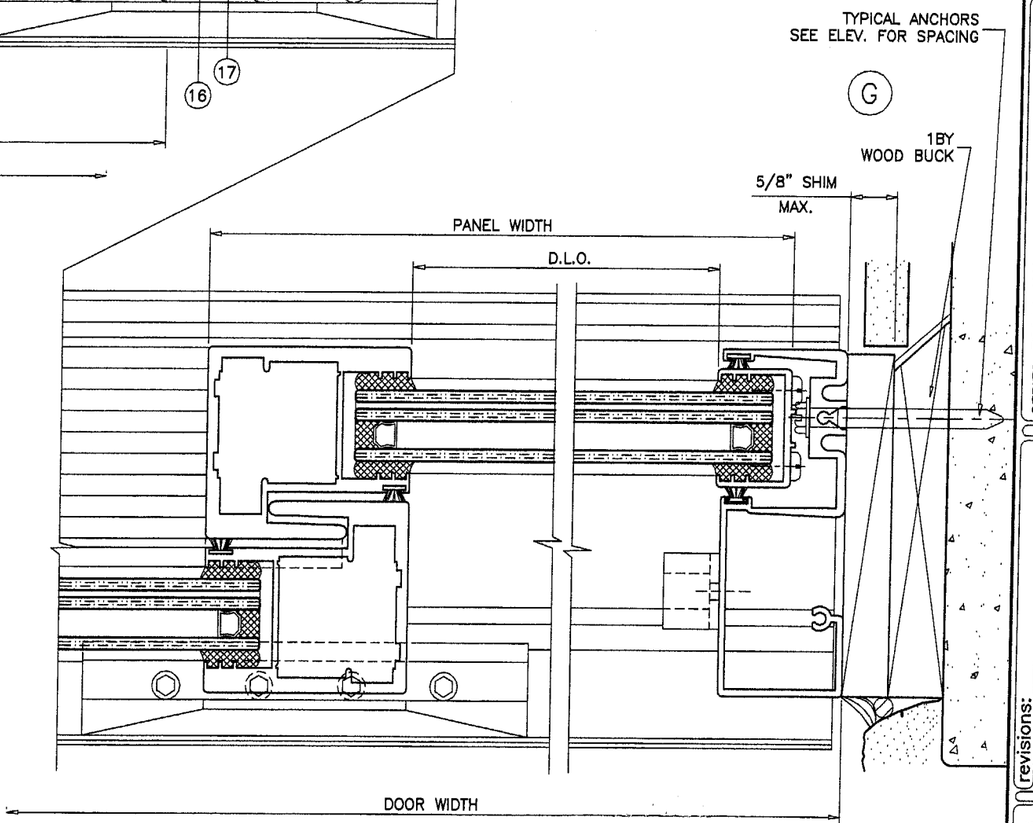

Approved as complying with the
Florida Buiding Code
Date 05/27/04
NOA# 04-0401.03
Miami Dade Product Control
Division
By

Engr: DR. HUMAYOUN FAROOQ
STRUCTURES
FLA. PE # 16557
C.A.N. 3538

MAR 2 9 2004

AL-FAROOQ CORPORATION
ENGINEERS, PLANNERS & PRODUCT DESIGN
1235 SW 87 AVE
MIAMI, FLORIDA 33174
TEL. (305) 264-8100 FAX. (305) 262-6978
COMP-ANL\W03-101RC

SERIES-RS240 ALUM SLIDING GLASS DOOR (L.M.I.)

R.C. ALUMINUM INDUSTRIES INC.
2805 N.W. 75 TH AVE.
MIAMI, FL. 33122
TEL. (305) 592-1515 FAX. (305) 592-2184

revisions:		
no	date	by description

date: 11-10-03
scale: 1/2" = 1"
dr. by: HAMID
chk. by:

drawing no.
W03-101

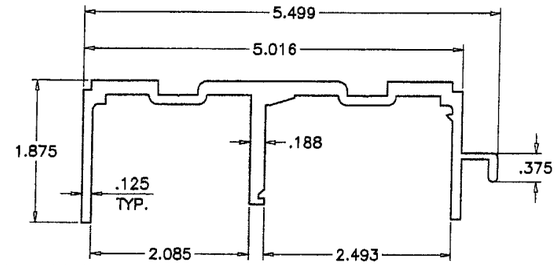

FRAME HEAD

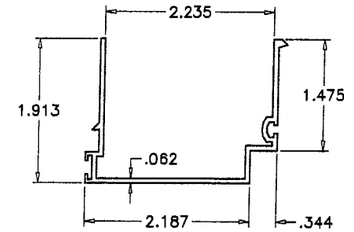

HEAD COVER

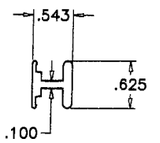

INSIDE SILL TRACK

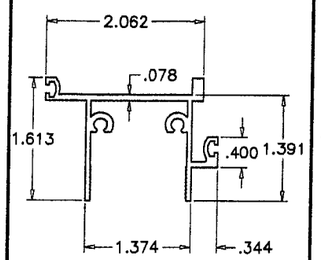

FIX. TOP RAIL

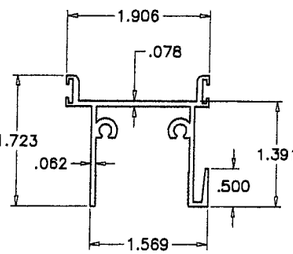

MOV. TOP RAIL

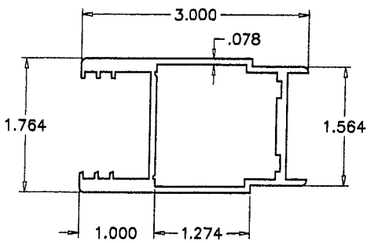

LOCK STILE

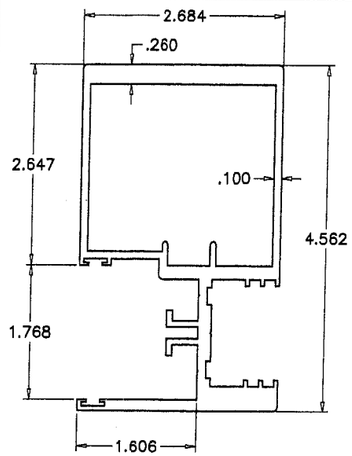

MTG. STILE

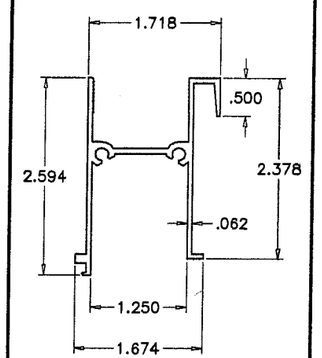

FIX. BOTTOM RAIL

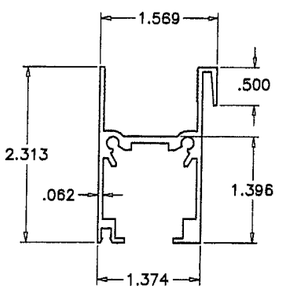

MOVING BOTTOM RAIL

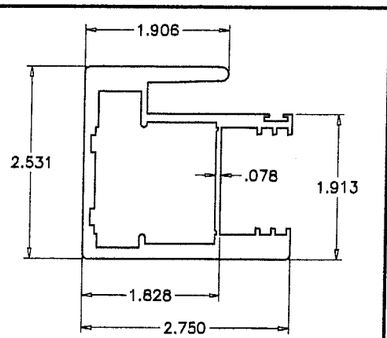

INTERLOCK

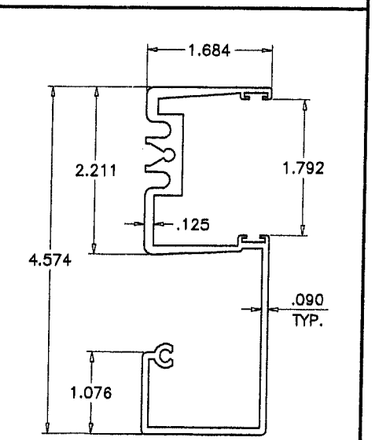

FRAME JAMB

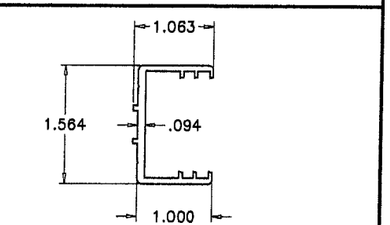

FIXED STILE

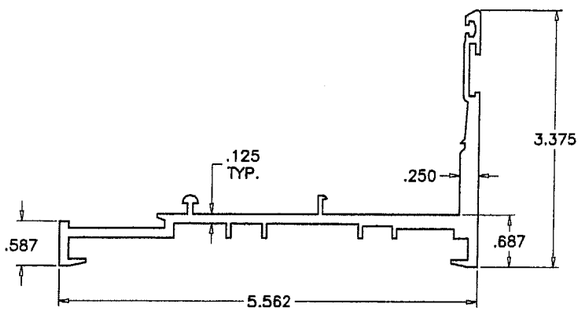

FRAME SILL

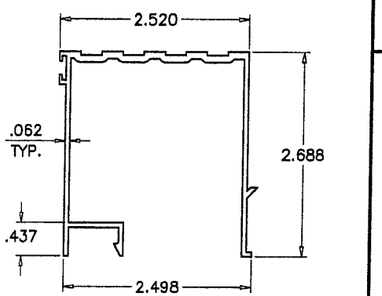

THRESHOLD COVER

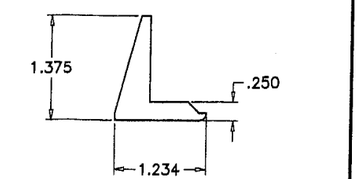

SILL ANCHOR

Approved as complying with the Florida Building Code
Date 05/27/04
NOA# 04-0401.03
Miami Dade Product Control Division
By

Engr: DR. HUMAYOUN FAROOQ
STRUCTURES
FLA. PE # 16557
C.A.N. 3538

MAR 2 9 2004

AL-FAROOQ CORPORATION
ENGINEERS, PLANNERS & PRODUCT DESIGN
1235 SW 87 AVE
MIAMI, FLORIDA 33174
TEL. (305) 264-8100 FAX. (305) 262-6978

COMP-ANL\W03-101RC

SERIES-RS240 ALUM SLIDING GLASS DOOR (L.M.I.)

R.C. ALUMINUM INDUSTRIES INC.
2805 N.W. 75 TH AVE.
MIAMI, FL. 33122
TEL. (305) 592-1515 FAX. (305) 592-2184

revisions:			
no	date	by	description

date: 11-10-03
scale: 1/2" = 1"
dr. by: HAMID
chk. by:

drawing no.
W03-101

ITEM NO.	PART NUMBER	QUANTITY	DESCRIPTION	MATERIAL	MANF./SUPPLIER/REMARKS
1	2400ST-038	1	FRAME HEAD	6005-T5	–
2	2400ST-039	1	FRAME SILL	6005-T5	–
3	2400ST-042	2	FRAME JAMB	6063-T6	–
4	2400ST-028	1/MOV. PANEL	MOVING HORIZ. BOTT. RAIL	6063-T6	–
5	2400ST-029	1/FIX. PANEL	FIXED HORIZ. BOTT. RAIL	6063-T6	–
6	2400ST-026	1/MOV. PANEL	TOP MOVING RAIL	6063-T6	–
7	2400ST-027	1/FIX. PANEL	TOP FIXED RAIL	6063-T6	–
8	2400ST-024	1/FIX. PANEL	JAMB FIXED STILE	6063-T6	–
9	2400ST-022	1	JAMB FIX. STILE/LOCK STILE	6063-T6	–
10	2400ST-041	1/ PANEL	INTERLOCK	6063-T6	–
11	2400ST-025	1	MEETING STILE	6063-T6	–
12	2400ST-012	1	THRESHOLD COVER	6063-T6	–
13	2400ST-011	–	SILL TRACK ANCHOR	6005-T5	6" LONG
14	2400ST-019	1	HEAD COVER	6063-T6	–
15	2400ST-031	2	SILL TRACK PLATE (5-1/4" X 1/4" X 5" LONG	6061-T6	AT EACH END
15A	2400ST-031	3	SILL TRACK PLATE (5-1/4" X 1/4" X 10" LONG	6061-T6	AT INTERLOCK/ASTRAGAL STILES
16	2400ST-032	–	MTG. RAIL THRESHOLD SEAL	6063-T5	6" LONG
17	#10 X 1/2"	2	WEATHERSTRIP FASTENERS	–	–
18	V-027	–	BULB W'STRIPPING	VINYL	FP-712 PROTOTYPE
19	WV-2310	–	FLAP WEATHER SEAL	VINYL	WIBORG
20	V-026	–	BULB W'STRIPPING	VINYL	FP-198 PROTOTYPE
21	W31265NK	–	FIN PILE W'STRIPPING	–	ULTRAFAB
22	Q250X270	–	Q-LON W'STRIPPING	–	SCHLEGEL
26	100-7101	2/MOV. PANEL	TANDEM WHEEL ASSEMBLY	–	WORLD IND. PRODUCTS INTL.
27	10-0018XX	1	STANDARD SLIDE SET LOCK	–	WORLD IND. PRODUCTS INTL.
28	–	1	LOCK KEEPER	–	–
29	–	–	DOOR BUMPER	–	1" DIA. X 3/4" LONG
30	2400ST-040	AS REQD.	INSIDE SCREEN TRACK	6063-T6	–
31	#10 X 1-1/4"	2/ PANEL	PANEL ASSBY. SCREWS	ST/ST	–
32	#10 X 1-1/4"	2/ CORNER	FRAME ASSBY. SCREWS	ST/ST	–
33	–	2	4-1/4" X .060" X 6" LONG PLATE	ALUMINUM	AT FRAME JAMB BOTTOM
34	–	–	5/8" X 1-1/2" X .1" PLATE @ LOCK STILE BOTTOM	ALUMINUM	FASTENED WITH #8 X 3/8" FH SMS

Approved as complying with the
Florida Buiding Code
Date 05/27/04
NOA# 04-0401.03
Miami Dade Product Control
Division
By

Engr: DR. HUMAYOUN FAROOQ
STRUCTURES
FLA. PE # 16557
C.A.N. 3538

MAR 2 9 2004

AL-FAROOQ CORPORATION
ENGINEERS, PLANNERS & PRODUCT DESIGN
1235 SW 87 AVE
MIAMI, FLORIDA 33174
TEL. (305) 264-8100 FAX. (305) 262-6978
COMP-ANL\W03-101RC

SERIES-RS240 ALUM SLIDING GLASS DOOR (L.M.I.)

R.C. ALUMINUM INDUSTRIES INC.
2805 N.W. 75 TH AVE.
MIAMI, FL. 33122
TEL. (305) 592-1515 FAX. (305) 592-2184

revisions:

no	date	by	description

date: 11-10-03
scale: 1/2" = 1"
dr. by: HAMID
chk. by:

drawing no.
W03-101

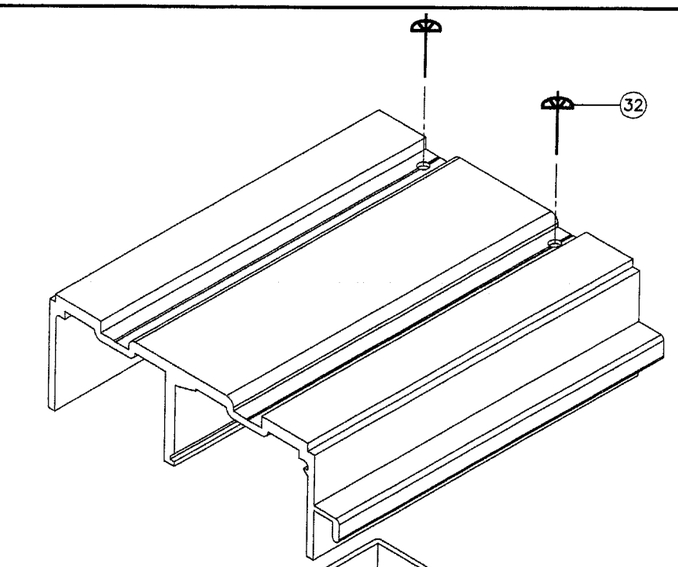

FRAME TOP CORNER

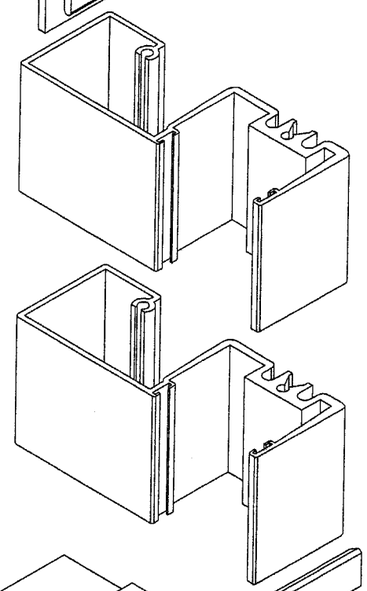

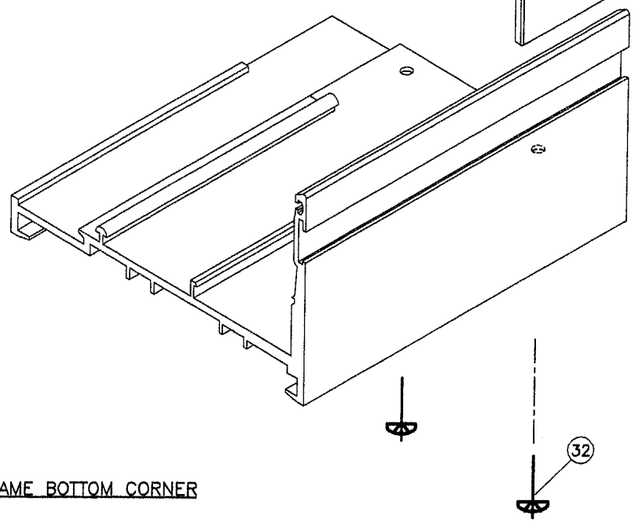

FRAME BOTTOM CORNER

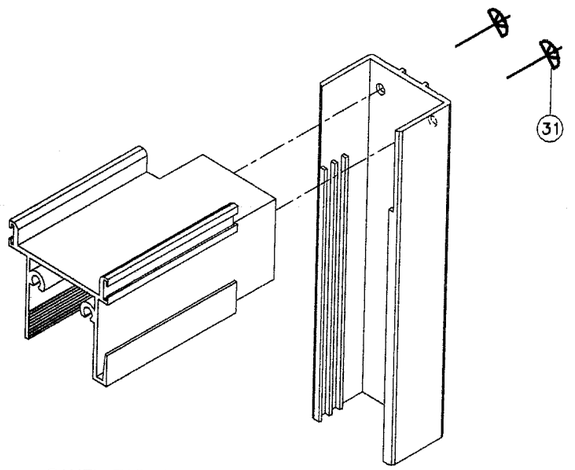

PANEL TOP CORNER

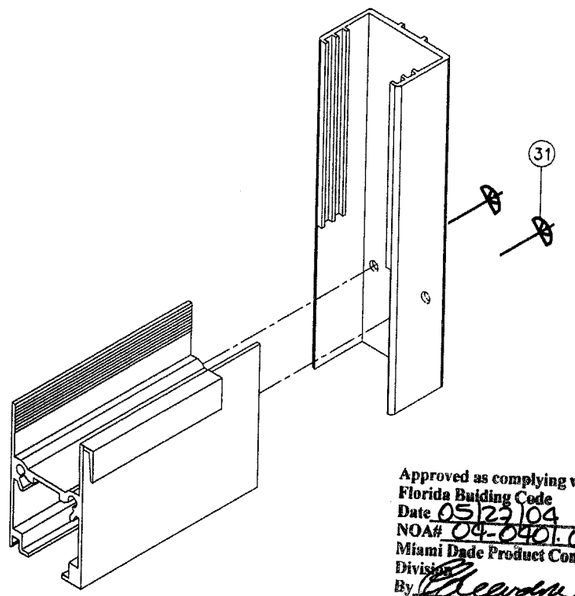

PANEL BOTTOM CORNER

Approved as complying with the Florida Building Code
Date 05/23/04
NOA# 04-0401.03
Miami Dade Product Control Division
By

Engr: DR. HUMAYOUN FAROOQ
STRUCTURES
FLA. PE # 16557
C.A.N. 3538

MAR 2 9 2004

AL-FAROOQ CORPORATION
ENGINEERS, PLANNERS & PRODUCT DESIGN
1235 SW 87 AVE
MIAMI, FLORIDA 33174
TEL. (305) 264-8100 FAX. (305) 262-6978

COMP-ANL\W03-101RC

SERIES-RS240 ALUM SLIDING GLASS DOOR (L.M.I.)

R.C. ALUMINUM INDUSTRIES INC.
2805 N.W. 75 TH AVE.
MIAMI, FL. 33122
TEL. (305) 592-1515 FAX. (305) 592-2184

revisions:

no	date	by	description

date: 11-10-03
scale: 1/2" = 1"
dr. by: HAMID
chk. by:

drawing no.
W03-101

sheet 7 of 7