MIAMI-DADE

BUILDING CODE COMPLIANCE OFFICE (BCCO)
PRODUCT CONTROL DIVISION

MIAMI-DADE COUNTY, FLORIDA
METRO-DADE FLAGLER BUILDING
140 WEST FLAGLER STREET, SUITE 1603
MIAMI, FLORIDA 33130-1563
(305) 375-2901 FAX (305) 375-2908

NOTICE OF ACCEPTANCE (NOA)

Horton Automatics
4242 Baldwin Blvd.
Corpus Christi, TX 78405

SCOPE:
This NOA is being issued under the applicable rules and regulations governing the use of construction materials. The documentation submitted has been reviewed by Miami-Dade County Product Control Division and accepted by the Board of Rules and Appeals (BORA) to be used in Miami Dade County and other areas where allowed by the Authority Having Jurisdiction (AHJ).

This NOA shall not be valid after the expiration date stated below. The Miami-Dade County Product Control Division (In Miami Dade County) and/or the AHJ (in areas other than Miami Dade County) reserve the right to have this product or material tested for quality assurance purposes. If this product or material fails to perform in the accepted manner, the manufacturer will incur the expense of such testing and the AHJ may immediately revoke, modify, or suspend the use of such product or material within their jurisdiction. BORA reserves the right to revoke this acceptance, if it is determined by Miami-Dade County Product Control Division that this product or material fails to meet the requirements of the applicable building code.

This product is approved as described herein, and has been designed to comply with the Florida Building Code including High Velocity Hurricane Zone of the Florida Building Code.

DESCRIPTION: Series "110" 16' x 8'-8" Aluminum Automatic Sliding Glass Door

APPROVAL DOCUMENT: Drawing No.**040302-S**, titled "16'x 8'-8" Series 110 Impact Small Missile" sheets 1 through 8 of 8, prepared by manufacturer, dated 03/02/04, signed and sealed by Ballard L. Argus, P.E., bearing the Miami-Dade County Product Control approval stamp with the Notice of Acceptance number and approval date by the Miami-Dade County Product Control Division.

MISSILE IMPACT RATING: Small Missile Impact

LABELING: Each unit shall bear a permanent label with the manufacturer's name or logo, city, state and following statement: "Miami-Dade County Product Control Approved", unless otherwise noted herein.

RENEWAL of this NOA shall be considered after a renewal application has been filed and there has been no change in the applicable building code negatively affecting the performance of this product.

TERMINATION of this NOA will occur after the expiration date or if there has been a revision or change in the materials, use, and/or manufacture of the product or process. Misuse of this NOA as an endorsement of any product, for sales, advertising or any other purposes shall automatically terminate this NOA. Failure to comply with any section of this NOA shall be cause for termination and removal of NOA.

ADVERTISEMENT: The NOA number preceded by the words Miami-Dade County, Florida, and followed by the expiration date may be displayed in advertising literature. If any portion of the NOA is displayed, then it shall be done in its entirety.

INSPECTION: A copy of this entire NOA shall be provided to the user by the manufacturer or its distributors and shall be available for inspection at the job site at the request of the Building Official.
This NOA consists of this page 1 and evidence pages E-1 and E-2, as well as approval document mentioned above.
The submitted documentation was reviewed by **Herminio F. Gonzalez, P.E., Director, BCCO**

7/28/04

PRODUCT CONTROL ACCEPTED

Horton Automatics

NOTICE OF ACCEPTANCE: EVIDENCE SUBMITTED

A. DRAWINGS

1. Manufacturer's die drawings and sections.
2. Drawing No. **040302-S**, titled "16'x 8'-8" Series 110 Impact Small Missile" sheets 1 through 8 of 8, prepared by manufacturer, dated 03/02/04, signed and sealed by Ballard L. Argus, P.E.

B. TESTS

1. Test reports on 1) Air Infiltration Test, per, TAS 202-94
2) Uniform Static Air Pressure Test, Loading per, TAS 202-94
3) Large Missile Impact Test per, TAS 201-94
4) Cyclic Wind Pressure Loading per, TAS 203-94
5) Forced Entry Test, per FBC 2411 3.2.1 and TAS 202-94
along with installation diagram of aluminum automatic entrance door, prepared by Hurricane Test Laboratory, Inc. Test Report No. **0322-0611-03,** specimens # **1** and **2**, dated 06/12/03-1/16/04, signed and sealed by Vinu J. Abraham, P.E.

2. Test reports on 1) Uniform Static Air Pressure Test, Loading per, TAS 202-94
2). Large Missile Impact Test per, TAS 201-94
3) Cyclic Wind Pressure Loading per, TAS 203-94
along with installation diagram of aluminum automatic entrance door, prepared by Hurricane Test Laboratory, Inc. Test Report No. **0322-0119-04,** specimen # **1**, dated 06/12/03-1/16/04, signed and sealed by Vinu J. Abraham, P.E.

3. Test reports on 1) Large Missile Impact Test per, TAS 201-94
2) Cyclic Wind Pressure Loading per, TAS 203-94
along with installation diagram of aluminum automatic entrance door, prepared by Hurricane Test Laboratory, Inc. Test Report No. **0322-0908-03,** specimen # **3**, dated 10/16/03, signed and sealed by Vinu J. Abraham, P.E.

4. Test reports on 1) Air Infiltration Test, per, TAS 202-94
2) Small Missile Impact Test per, TAS 201-94
3) Forced Entry Test, per FBC 2411 3.2.1 and TAS 202-94
along with installation diagram of aluminum automatic entrance door, prepared by Hurricane Test Laboratory, Inc. Test Report No. **0322-0611-03,** specimens # **4** and **2**, dated 06/4-26/03, signed and sealed by Vinu J. Abraham, P.E.

5. Test reports on 1) Uniform Static Air Pressure Test, Loading per, TAS 202-94
2). Small Missile Impact Test per, TAS 201-94
3) Cyclic Wind Pressure Loading per, TAS 203-94
along with installation diagram of aluminum automatic entrance door, prepared by Hurricane Test Laboratory, Inc. Test Report No. **0322-0611-03,** specimen # **5**, dated 6/27-30/03, signed and sealed by Vinu J. Abraham, P.E.

Herminio F. Gonzalez, P.E.
Director, Building Code Compliance Office
NOA No 04-0406.02
Expiration Date: August 19, 2009
Approval Date: August 19, 2004

NOTICE OF ACCEPTANCE: EVIDENCE SUBMITTED

6. Test reports on 1) Air Infiltration Test, per, TAS 202-94
   2). Uniform Static Air Pressure Test, Loading per, TAS 202-94
   3) Forced Entry Test, per FBC 2411 3.2.1 and TAS 202-94
   along with installation diagram of aluminum automatic entrance door, prepared by Hurricane Test Laboratory, Inc. Test Report No. **0322-0908-03,** specimen # **6 & 7**, dated 6/03-10/03, signed and sealed by Vinu J. Abraham, P.E.

C. CALCULATIONS

1. Anchor calculation, ASTM-E1300, and structural analysis calculations, prepared, signed and sealed by Ballard L. Argus, P.E., dated March 25, 2004,

D. QUALITY ASSURANCE BY:

1. Miami-Dade County Building code Compliance Office (BCCO).

E. MATERIAL CERTIFICATIONS

1. None

F. STATEMENTS

1. Statement letter of conformance, dated March 25, 2004, signed and sealed by Ballard L. Argus, P.E.
2. Statement letter of no financial interest, dated March 25, 2004, signed and sealed by Ballard L. Argus, P.E.

G. OTHER

1. Letter from the consultant stating that the product is in compliance with the Florida Building Code (FBC).

Herminio F. Gonzalez, P.E.
Director, Building Code Compliance Office
NOA No 04-0406.02
Expiration Date: August 19, 2009
Approval Date: August 19, 2004

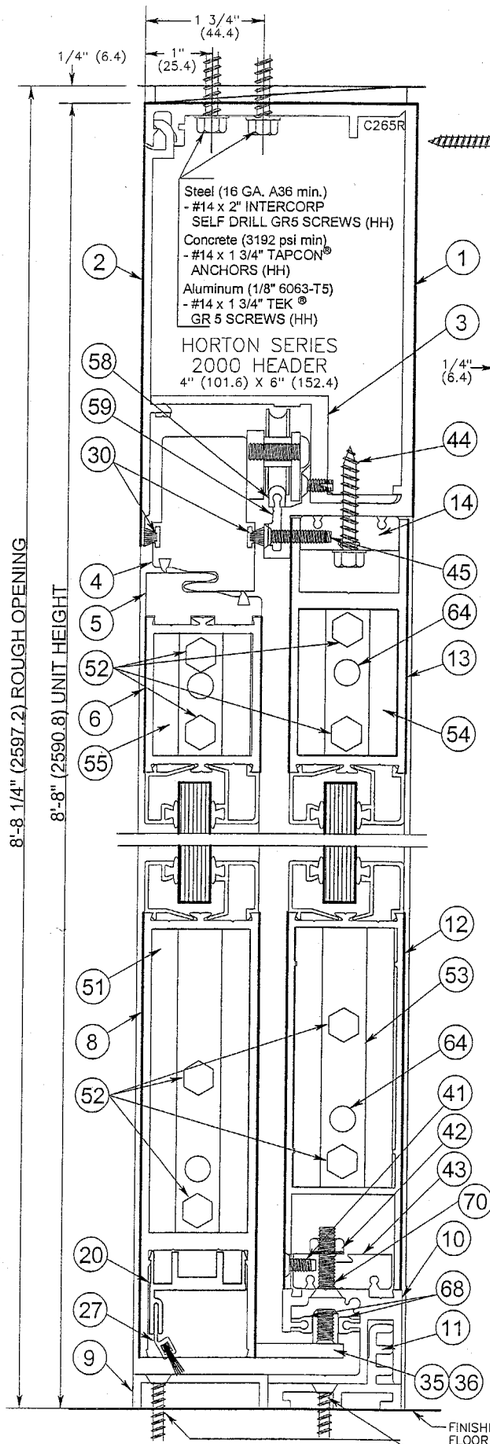

VERTICAL SECTION 1/1

DOOR SHOWN IN OPEN POSITION

NOTE: DIMENSIONS IN PARENTHESIS ( ) ARE METRIC MILLIMETER EQUIVALENTS

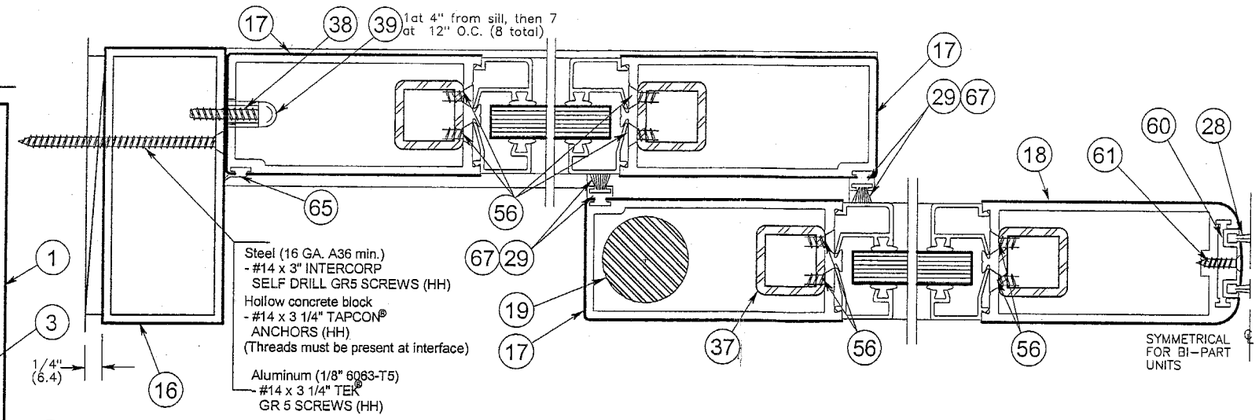

HORIZONTAL SECTION 2/1

For Header, Sill, & Jambs – Fastener must penetrate wood & extend 1.5" minimum into substrate.

Head to Jamb Steel Angles (Top – 2.25" X 0.63" X 0.13"; Bottom – 0.94" X 0.63" X 0.13") secured to jamb with 3.688" X 6" X 1/4" Alum. Tapping Plate & 2 ea. #1/4–20 X 5/8" SCS. The head is secured to the angles with 3 ea. #1/4–20 X 1/2" FHMS (2 @ top; 1 @ bottom).

ALL STRUCTURAL ALUMINUM MEMBERS ARE 6063–T5 ALLOY.
TYPICAL THICKNESS = 1/8", UNLESS INDICATED OTHERWISE
TYPICAL PANEL THICKNESS = 1 3/4"

The frame must be shimmed with a type of shim complying with the Florida Building Code and is capable of resisting the frame's rotation

WEATHERSEALS:

C389–FL	INTERLOCK SEAL	SCHLEGEL CORP. FINSEAL #7595–6011–0
C350	NOSING SEAL	SCHLEGEL CORP. SKIRTING SEAL #1104–5101
C524–FL	SLIDE PANEL BOTTOM SEAL	FELTON NYLON BRISTLE #490621
C293	SLIDE PANEL TOP SEAL	SCHLEGEL #8430–5016–7

HARDWARE:

C454	MAX SECURITY LOCK	ADAMS–RITE #MS1850S–250–628
C463	THUMBTURN	ADAMS–RITE #4066
C487	EXIT INDICATOR	ADAMS–RITE #4089
C883	THRESHOLD BOLT	ADAMS–RITE #4015
C815–RFL, C817–FL, C2130–1FL		SLIDE TOP ROLLER ASSEMBLIES
C843–1FL & C844–1FL BOTTOM GUIDES		

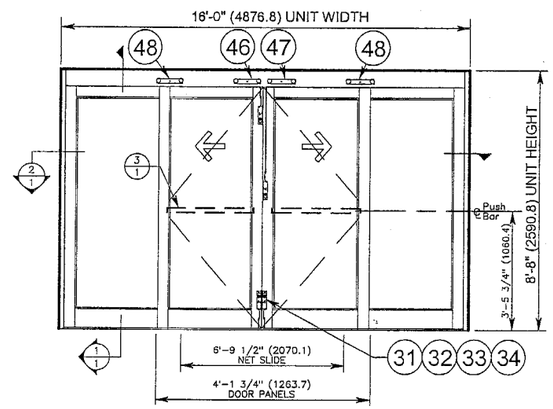

ELEVATION 4/1

FLOOR PLAN 5/1

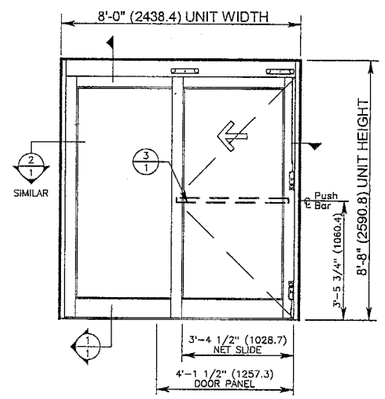

ELEVATION 6/1

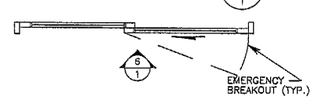

FLOOR PLAN 7/1

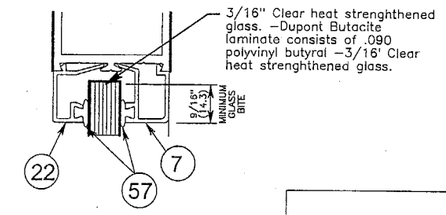

NOTE:
For fastener location and type see sheets 4 & 5

The allowable 4/3 increase stress factor for wind loads was not used in the anchor calculations for determining the minimum required anchor quantities shown on these drawings

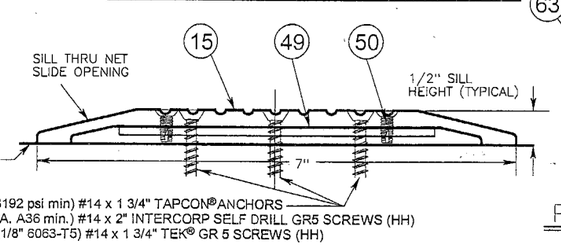

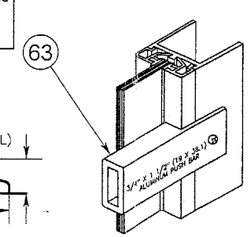

PUSH BAR DETAIL 3/1

Available Unit Sizes:	Panel Width nom. door	Net Slide opening
8'0"W X 7'6"H Min size	1@48"=48"	40 1/2"
16'0"W X 8'8"H Max size	2@48"=96"	81 1/2"

Maximum Daylight Openings:
Operable Panel: 40.63"W X 85.5"H
Fixed Panel: 39.75"W X 85.187"H

	WHERE WATER INFILTRATION REQUIREMENT IS NEEDED	WHERE WATER INFILTRATION REQUIREMENT IS NOT NEEDED
POSITIVE	NOT APPROVED	55PSF
NEGATIVE	NOT APPROVED	55PSF

Electrical/electronic functions are not part of this approval and must be reviewed by the appropriate building official.

Approved as complying with the Florida Buiding Code
Date 08/19/04
NOA# 04-0406.02
Miami Dade Product Control Division
By

7/8/04
FLA # 35686

Ballard L. Argus, P.E.
844 NW 91st Terrace
Plantation, Florida 33324
1-(954)-581-7678

16'x8'-8" Series 110 Small Missile

ARCHITECT:		A DIVISION OF OVERHEAD DOOR CORPORATION 4242 BALDWIN BOULEVARD CORPUS CHRISTI, TEXAS 78405–3399 361–888–5591 1–800–531–3111 FAX: 361–888–6510, 1–800–531–3108 http://www.hortondoors.com
CONTRACTOR:		
SERIES: 2110	TYPE: O–SX–SX–O & O–SX	
FINISH:		
ACTUATION:		JOB: METRO–DADE
		LOCATION:
		DISTRIBUTOR:
Dwg. No. 040302-S	DWN: / P.O. #	SHEET 1 of 8
	CHK: / DATE: 03–02–04	REVISION:

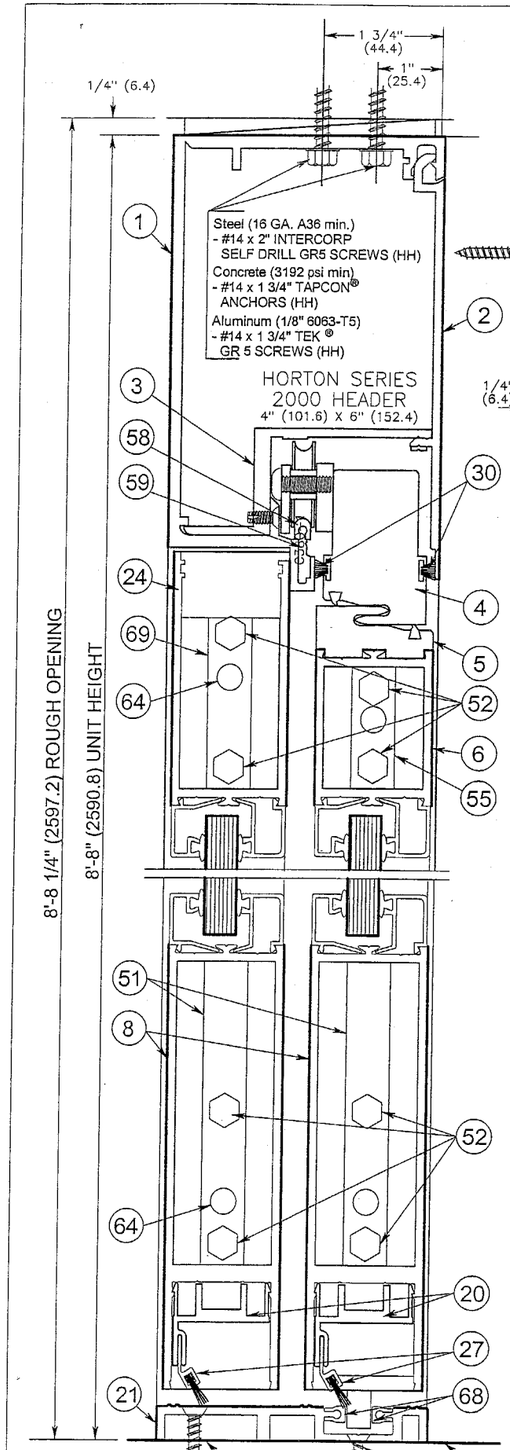

VERTICAL SECTION 1/1

DOOR SHOWN IN OPEN POSITION

NOTE: DIMENSIONS IN PARENTHESIS ( ) ARE METRIC MILLIMETER EQUIVALENTS

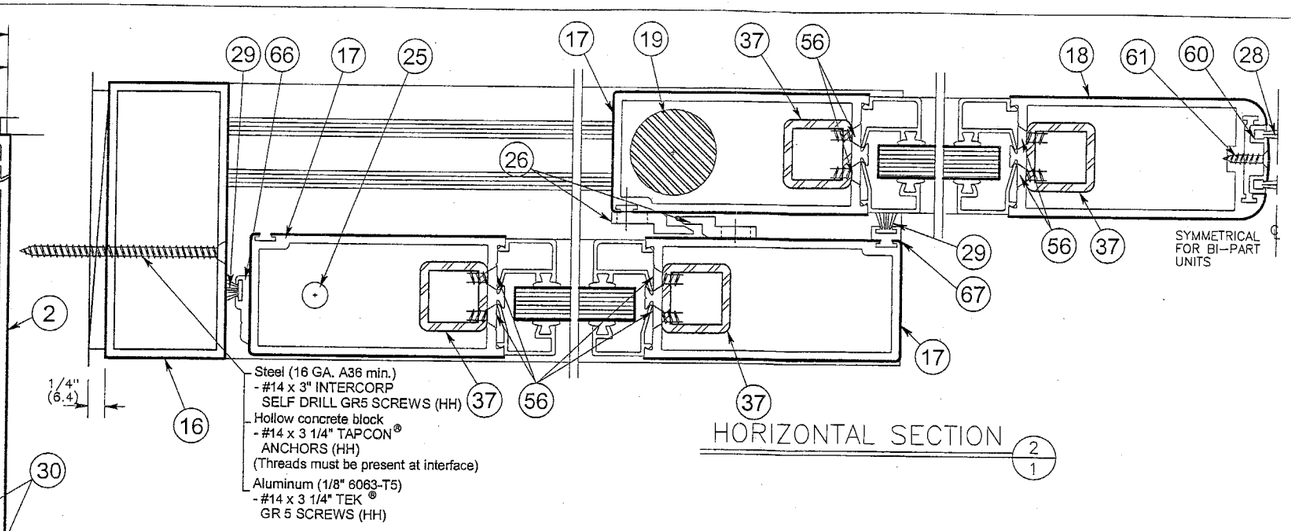

HORIZONTAL SECTION 2/1

For Header, Sill, & Jambs – Fastener must penetrate wood & extend 1.5" minimum into substrate.

Head to Jamb Steel Angles (Top – 2.25" X 0.63" X 0.13"; Bottom – 0.94" X 0.63" X 0.13") secured to jamb with 3.688" X 6" X 1/4" Alum. Tapping Plate & 2 ea. #1/4-20 X 5/8" SCS. The head is secured to the angles with 3 ea. #1/4-20 X 1/2" FHMS (2 @ top; 1 @ bottom).

ALL STRUCTURAL ALUMINUM MEMBERS ARE 6063-T5 ALLOY.
TYPICAL THICKNESS = 1/8", UNLESS INDICATED OTHERWISE
TYPICAL PANEL THICKNESS = 1 3/4"

The frame must be shimmed with a type of shim complying with the Florida Building Code and is capable of resisting the frame's rotation

WEATHERSEALS:

C389-FL	INTERLOCK SEAL	SCHLEGEL CORP. FINSEAL #7595-6011-0
C350	NOSING SEAL	SCHLEGEL CORP. SKIRTING SEAL #1104-5101
C524-FL	SLIDE PANEL BOTTOM SEAL	FELTON NYLON BRISTLE #490621
C293	SLIDE PANEL TOP SEAL	SCHLEGEL #8430-5016-7

HARDWARE:

C454	MAX SECURITY LOCK	ADAMS-RITE #MS1850S-250-628
C463	THUMBTURN	ADAMS-RITE #4066
C467	EXIT INDICATOR	ADAMS-RITE #4089
C883	THRESHOLD BOLT	ADAMS-RITE #4015
C815-RFL, C817-FL, C2130-1FL		SLIDE TOP ROLLER ASSEMBLIES
C852-4	BOTTOM GUIDE	

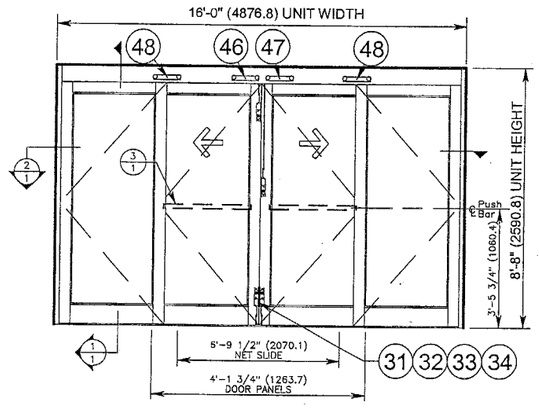

ELEVATION 4/1

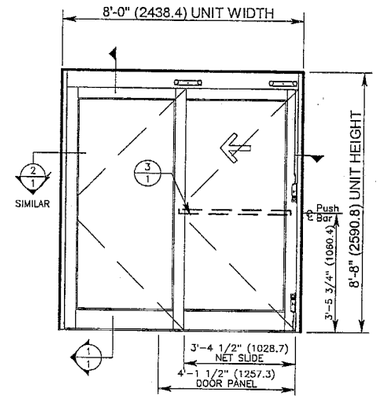

ELEVATION 6/1

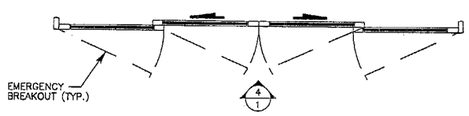

FLOOR PLAN 5/1

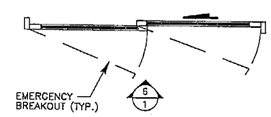

FLOOR PLAN 7/1

NOTE:
For fastener location and type see sheets 4 & 5

The allowable 4/3 increase stress factor for wind loads was not used in the anchor calculations for determining the minimum required anchor quantities shown on these drawings

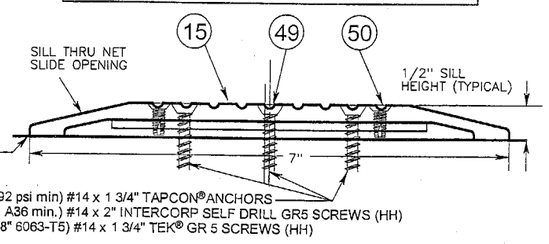

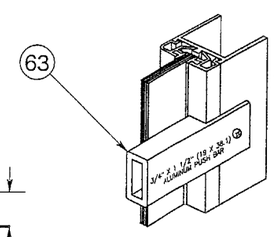

PUSH BAR DETAIL 3/1

Available Unit Sizes:	Panel Width nom. door	Net Slide opening
8'0"W X 7'6"H Min size	1@48"=48"	40 1/2"
16'0"W X 8'8"H Max size	2@48"=96"	81 1/2"

Maximum Daylight Openings:
Operable Panel: 40.63"W X 85.5"H
Fixed-Breakaway Panel: 39.75"W X 85.38"H

	WHERE WATER INFILTRATION REQUIREMENT IS NEEDED	WHERE WATER INFILTRATION REQUIREMENT IS NOT NEEDED
POSITIVE	NOT APPROVED	55PSF
NEGATIVE	NOT APPROVED	55PSF

Electrical/electronic functions are not part of this approval and must be reviewed by the appropriate building official.

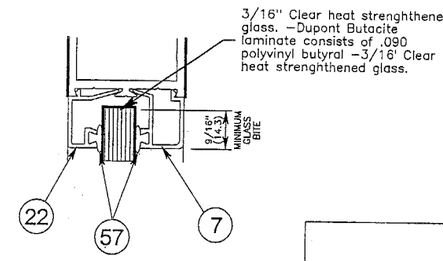

Approved as complying with the Florida Building Code
Date 08/19/04
NOA# 04-0406.02
Miami-Dade Product Control Division
By

7/8/04
FL# 35686

Ballard L. Argus, P.E.
844 NW 91st Terrace
Plantation, Florida 33324
1-(954)-581-7678

16'x8'-8" Series 310 Small Missile

ARCHITECT:	
CONTRACTOR:	
SERIES: 2310	TYPE: SO-SX-SX-SO & SO-SX
FINISH:	
ACTUATION:	

Dwg. No. 040302-S

Horton AUTOMATICS
A DIVISION OF OVERHEAD DOOR CORPORATION
4242 BALDWIN BOULEVARD
CORPUS CHRISTI, TEXAS 78405-3399
361-888-5591 1-800-531-3111
FAX: 361-888-6510, 1-800-531-3108
http://www.hortondoors.com

JOB: METRO-DADE		
LOCATION:		
DISTRIBUTOR:		
DWN:	P.O. #	SHEET 2 of 8
CHK:	DATE: 03-02-04	REVISION:

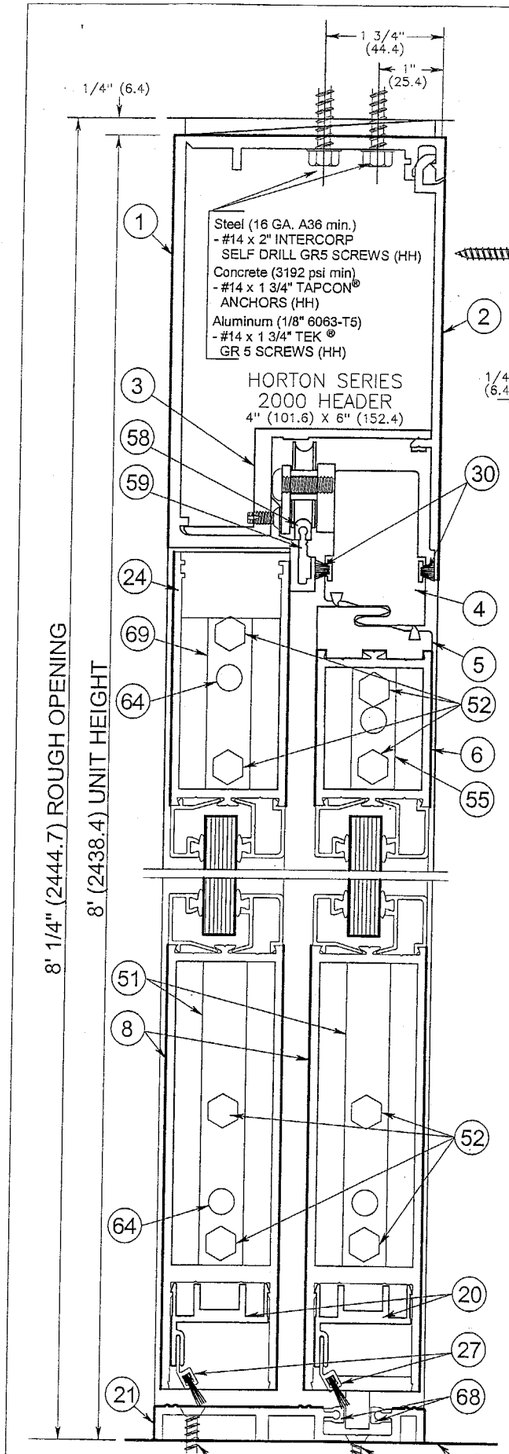

VERTICAL SECTION 1/1

DOOR SHOWN IN OPEN POSITION
NOTE: DIMENSIONS IN PARENTHESIS ( ) ARE METRIC MILLIMETER EQUIVALENTS

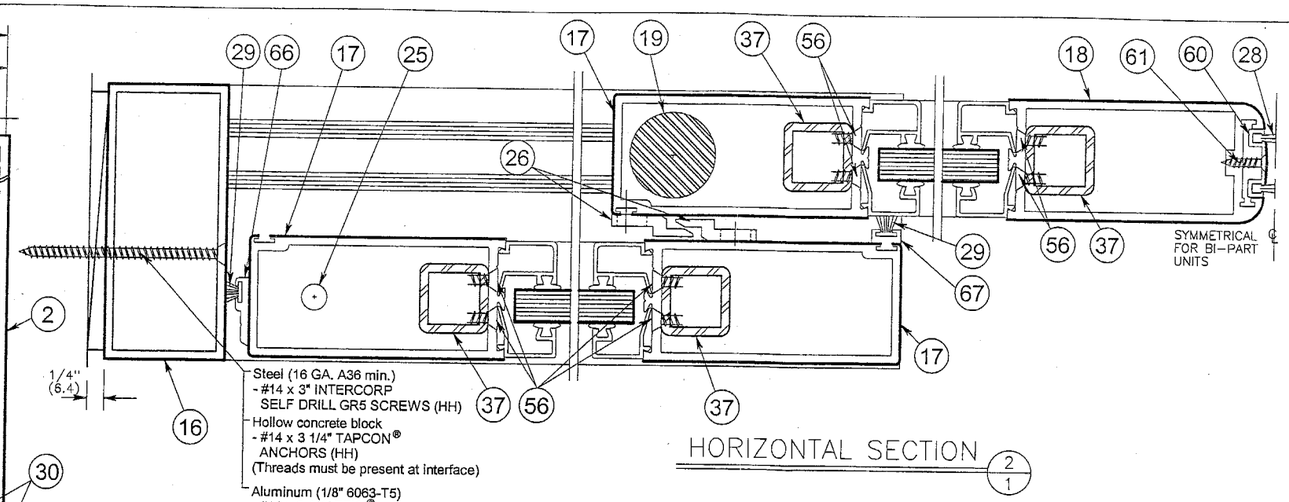

HORIZONTAL SECTION 2/1

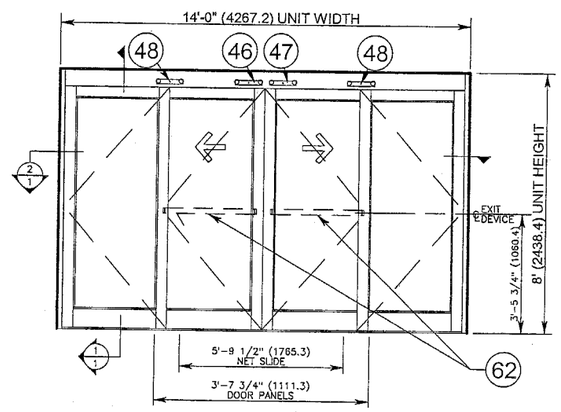

ELEVATION 4/1

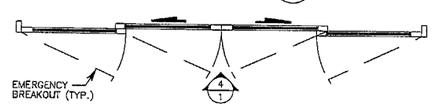

FLOOR PLAN 5/1

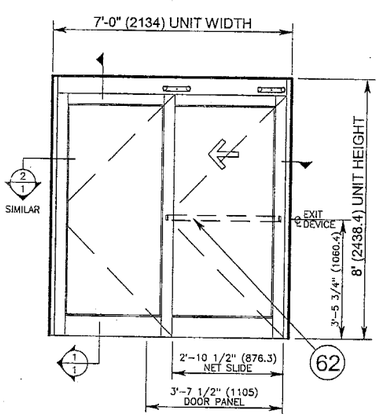

ELEVATION 6/1

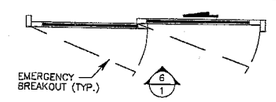

FLOOR PLAN 7/1

NOTE:
For fastener location and type see sheets 4 & 5
See sheet 8 for exit device

The allowable 4/3 increase stress factor for wind loads was not used in the anchor calculations for determining the minimum required anchor quantities shown on these drawings

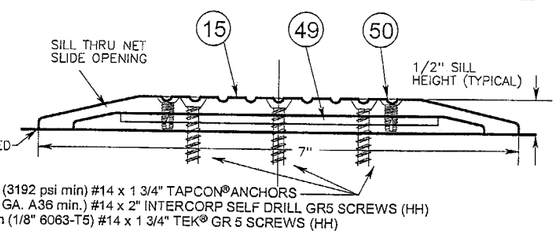

For Header, Sill, & Jambs – Fastener must penetrate wood & extend 1.5" minimum into substrate.

Head to Jamb Steel Angles (Top – 2.25" X 0.63" X 0.13"; Bottom – 0.94" X 0.63" X 0.13") secured to jamb with 3.688" X 6" X 1/4" Alum. Tapping Plate & 2 ea. #1/4-20 X 5/8" SCS. The head is secured to the angles with 3 ea. #1/4-20 X 1/2" FHMS (2 @ top; 1 @ bottom).

ALL STRUCTURAL ALUMINUM MEMBERS ARE 6063-T5 ALLOY.
TYPICAL THICKNESS = 1/8", UNLESS INDICATED OTHERWISE
TYPICAL PANEL THICKNESS = 1 3/4"

The frame must be shimmed with a type of shim complying with the Florida Building Code and is capable of resisting the frame's rotation

WEATHERSEALS:

C389-FL	INTERLOCK SEAL	SCHLEGEL CORP. FINSEAL #7595-6011-0
C350	NOSING SEAL	SCHLEGEL CORP. SKIRTING SEAL #1104-5101
C524-FL	SLIDE PANEL BOTTOM SEAL	FELTON NYLON BRISTLE #490621

HARDWARE:

C2361	EXIT DEVICE (ADAMS-RITE G86H)
C815-RFL, C817-FL, C2130-1FL	SLIDE TOP ROLLER ASSEMBLIES
C852-4	BOTTOM GUIDE

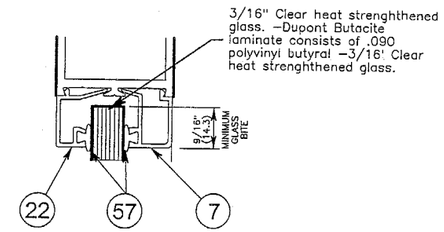

Approved as complying with the Florida Building Code
Date 08/19/04
NOA# 04-0406.02
Miami-Dade Product Control Division
By

7/8/04
FL# 35686

Available Unit Sizes:	Panel Width nom. door	Net Slide opening
7'0"W X 7'6"H Min size	1@42"=42"	34 1/2"
14'0"W X 8'0"H Max size	2@42"=84"	69 1/2"

Maximum Daylight Openings:
Operable Panel: 34.625"W X 77.5"H
Fixed Panel: 33.437"W X 77.38"H

	WHERE WATER INFILTRATION REQUIREMENT IS NEEDED	WHERE WATER INFILTRATION REQUIREMENT IS NOT NEEDED
POSITIVE	NOT APPROVED	45PSF
NEGATIVE	NOT APPROVED	45PSF

Electrical/electronic functions are not part of this approval and must be reviewed by the appropriate building official.

Ballard L. Argus, P.E.
844 NW 91st Terrace
Plantation, Florida 33324
1-(954)-581-7678

14'x8'-0" Series 310 Impact Small Missile with Exit Device (see sheet 8)

ARCHITECT:	
CONTRACTOR:	
SERIES: 2310	TYPE: SO-SX-SX-SO & SO-SX
FINISH:	
ACTUATION:	

Dwg. No. 040302-S

Horton AUTOMATICS
A DIVISION OF OVERHEAD DOOR CORPORATION
4242 BALDWIN BOULEVARD
CORPUS CHRISTI, TEXAS 78405-3399
361-888-5591 1-800-531-3111
FAX: 361-888-6510, 1-800-531-3108
http://www.hortondoors.com

JOB: METRO-DADE		
LOCATION:		
DISTRIBUTOR:		
DWN:	P.O. #	SHEET 3 of 8
CHK:	DATE: 03-02-04	REVISION:

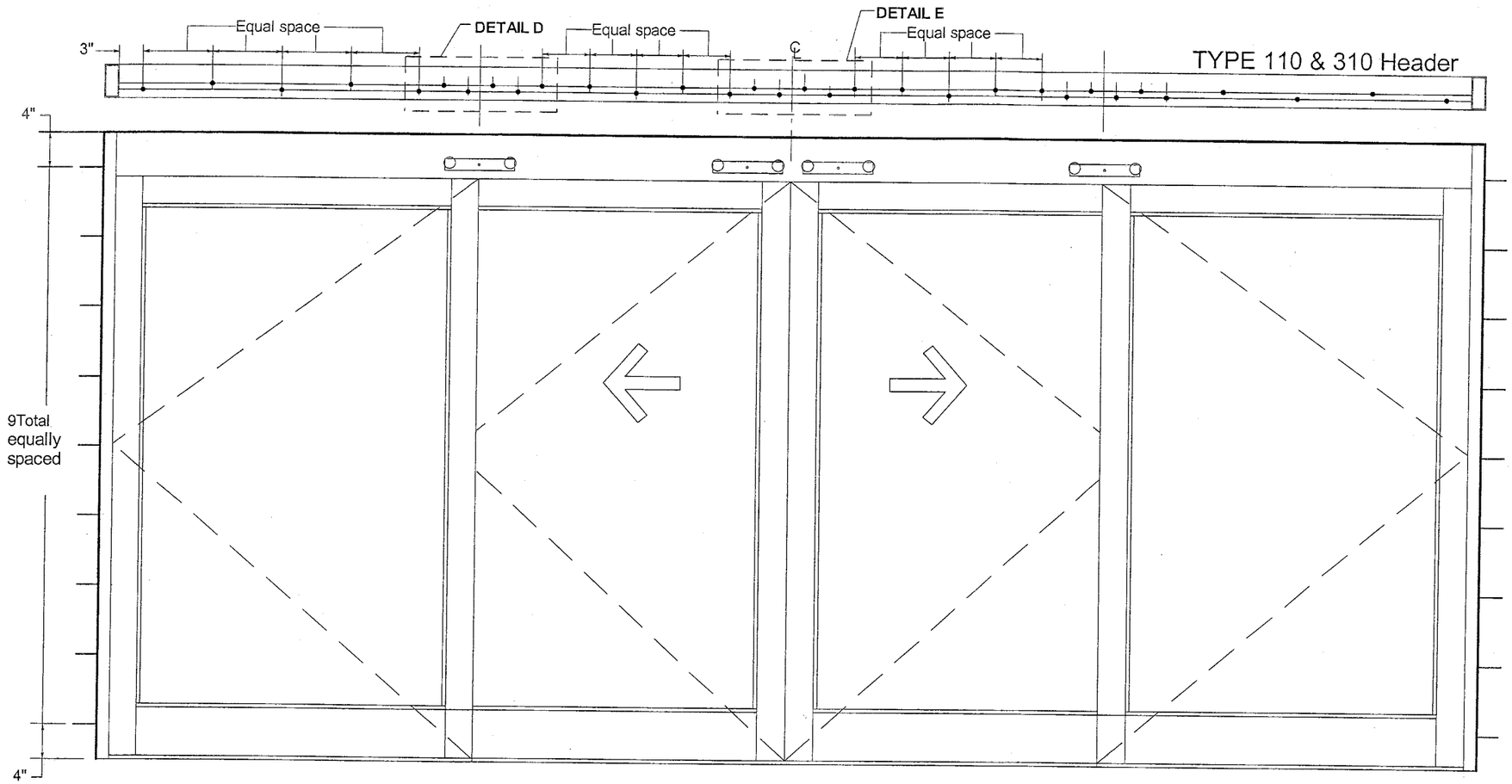

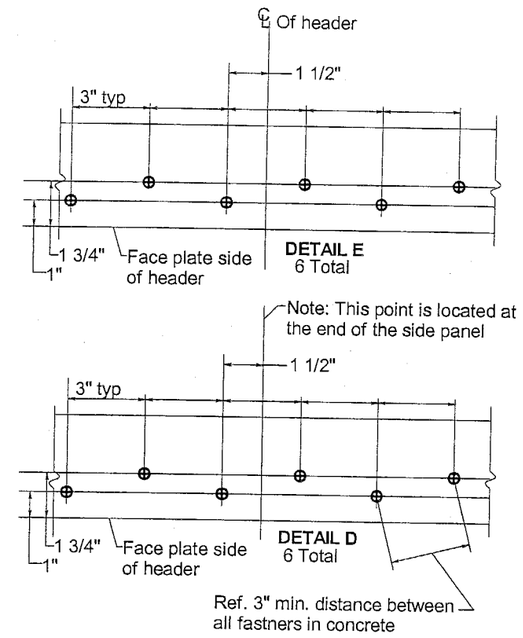

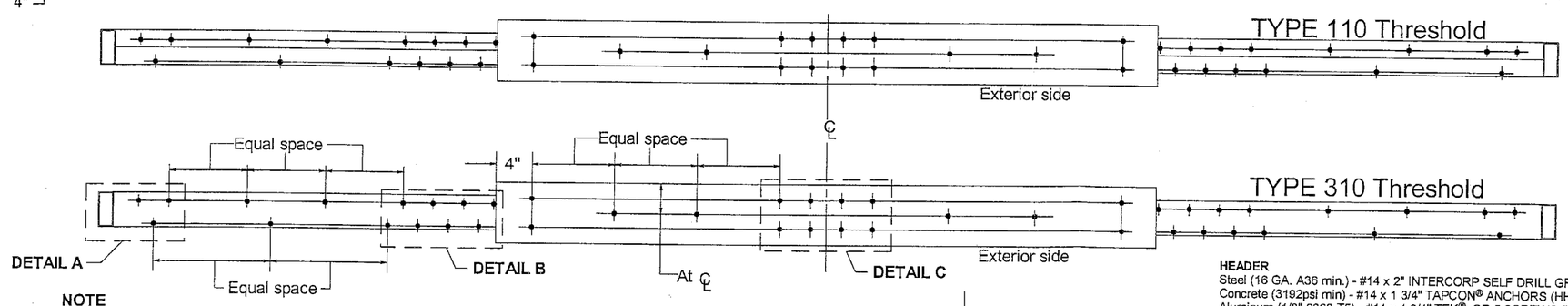

NOTE
Fastner spaceing is the same for 110 & 310 except as noted

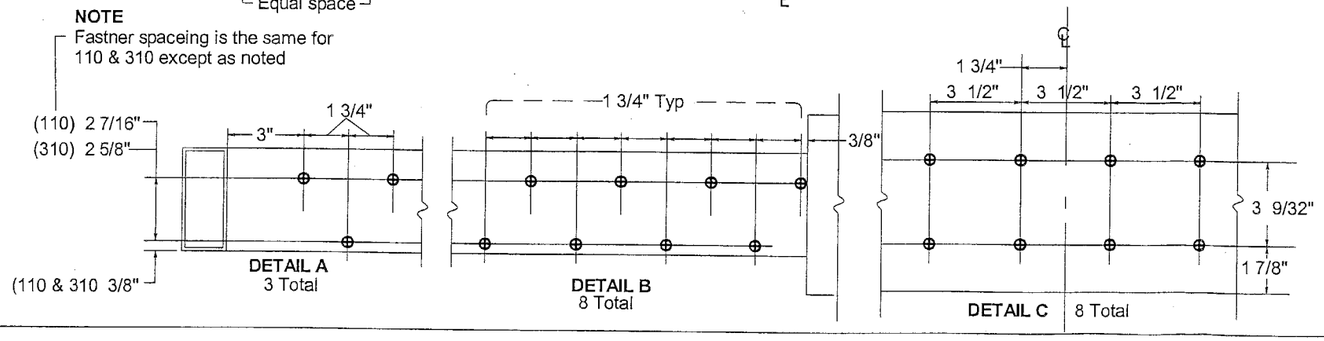

The allowable 4/3 increase stress factor for wind loads was not used in the anchor calculations for determining the minimum required anchor quantities shown on these drawings

The frame must be shimmed with a type of shim complying with the Florida Building Code and is capable of resisting the frame's rotation

HEADER
Steel (16 GA. A36 min.) - #14 x 2" INTERCORP SELF DRILL GR5 SCREWS (HH)
Concrete (3192psi min) - #14 x 1 3/4" TAPCON® ANCHORS (HH) x 1" min embedment
Aluminum (1/8" 6063-T5) - #14 x 1 3/4" TEK® GR 5 SCREWS (HH)

JAMB
Steel (16 GA. A36 min.) - #14 x 3" INTERCORP SELF DRILL GR5 SCREWS (HH)
Hollow concrete block - #14 x 3 1/4" TAPCON ANCHORS (HH) x 1 1/4" min embedment
Aluminum (1/8" 6063-T5) - #14 x 3 1/4" TEK® GR 5 SCREWS (HH)

THRESHOLD
Concrete (3192psi min) - #14 x 1 3/4" TAPCON® ANCHORS (HH) x 1" min embedment
Steel (16 GA. A36 min.) #14 x 2" INTERCORP SELF DRILL GR5 SCREWS (HH)
Aluminum (1/8" 6063-T5) #14 x 1 3/4" TEK® GR 5 SCREWS (HH)

Ballard L. Argus, P.E.
844 NW 91st Terrace
Plantation, Florida 33324
1-(954)-581-7678

Approved as complying with the Florida Buiding Code
Date 08/19/04
NOA# 04-0406.02
Miami-Dade Product Control Division
By

7/8/04
Fu # 35686

Fastener locations

ARCHITECT:	
CONTRACTOR:	
SERIES: 2310	TYPE:
FINISH:	
ACTUATION:	
Bi-Part Fastner Locations	
Dwg. No. 040302-S	

Horton AUTOMATICS
A DIVISION OF OVERHEAD DOOR CORPORATION
4242 BALDWIN BOULEVARD
CORPUS CHRISTI, TEXAS 78405-3399
361-888-5591 1-800-531-3111
FAX: 361-888-6510, 1-800-531-3108
http://www.hortondoors.com

JOB: METRO-DADE		
LOCATION:		
DISTRIBUTOR:		
DWN:	P.O. #	SHEET 4 of 8
CHK:	DATE: 03-02-04	REVISION:

TYPE 110 & 310 Header

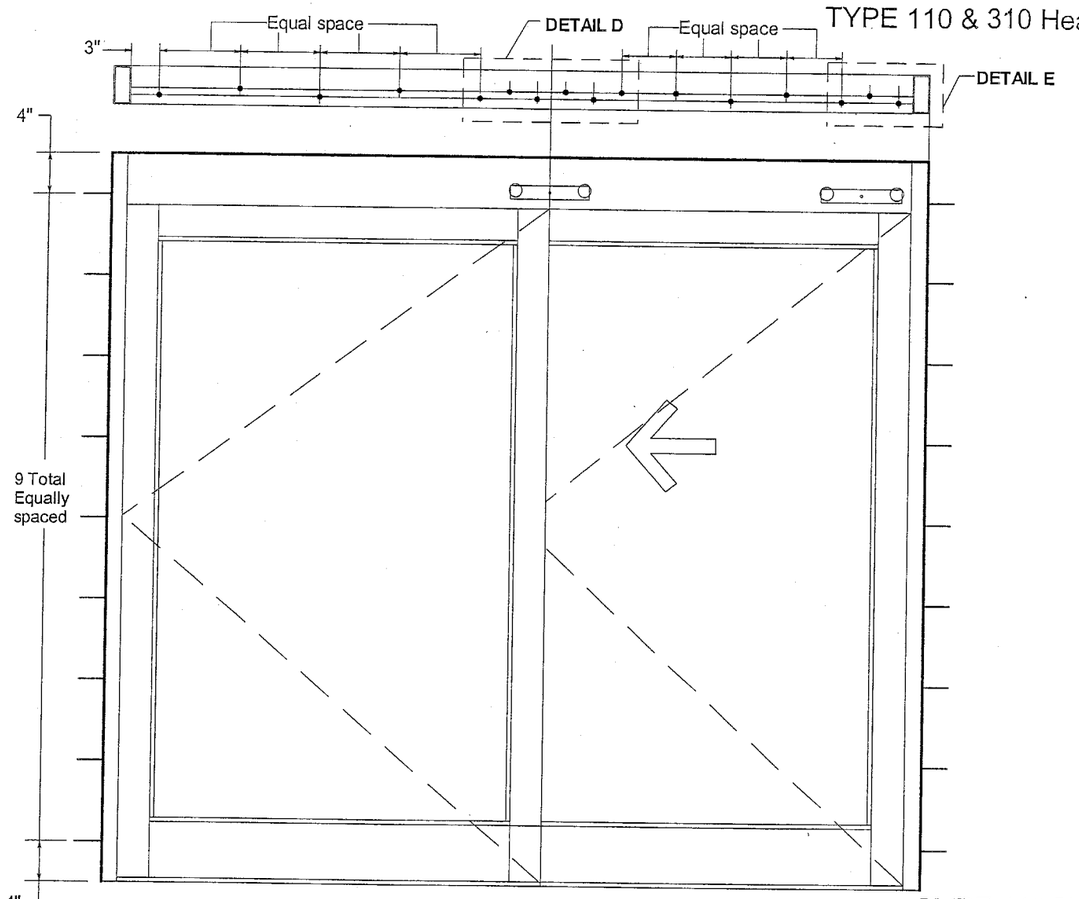

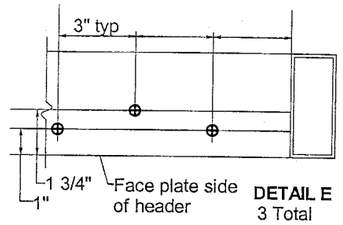

HEADER
Steel (16 GA. A36 min.) - #14 x 2" INTERCORP SELF DRILL GR5 SCREWS (HH)
Concrete (3192psi min) - #14 x 1 3/4" TAPCON® ANCHORS (HH) x 1" min embedment
Aluminum (1/8" 6063-T5) - #14 x 1 3/4" TEK® GR 5 SCREWS (HH)

JAMB
Steel (16 GA. A36 min.) - #14 x 3" INTERCORP SELF DRILL GR5 SCREWS (HH)
Hollow concrete block - #14 x 3 1/4" TAPCON ANCHORS (HH) x 1 1/4" min embedment
Aluminum (1/8" 6063-T5) - #14 x 3 1/4" TEK® GR 5 SCREWS (HH)

THRESHOLD
Concrete (3192psi min) - #14 x 1 3/4" TAPCON® ANCHORS (HH) x 1" min embedment
Steel (16 GA. A36 min.) #14 x 2" INTERCORP SELF DRILL GR5 SCREWS (HH)
Aluminum (1/8" 6063-T5) #14 x 1 3/4" TEK® GR 5 SCREWS (HH)

Note:
This point is located at the end of the side panel

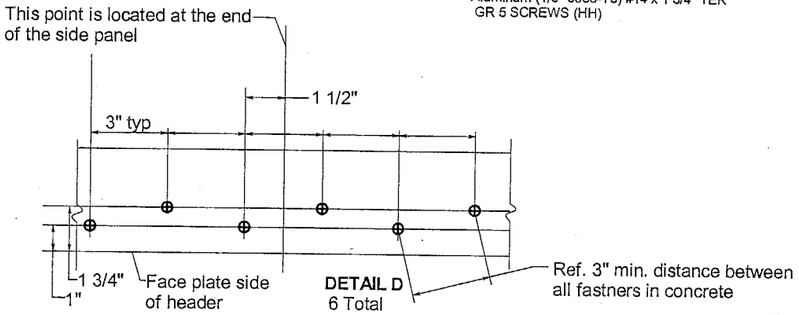

TYPE 110 Threshold

Exterior side

TYPE 310 Threshold

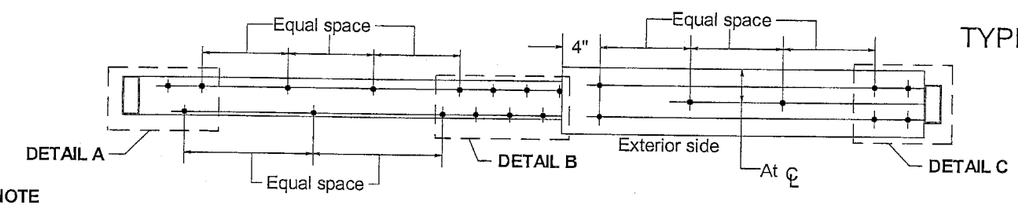

NOTE
Fastner spaceing is the same for 110 & 310 except as noted

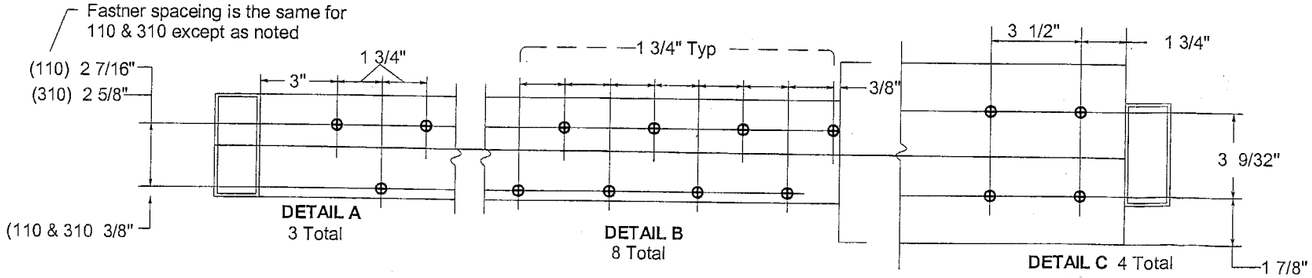

The allowable 4/3 increase stress factor for wind loads was not used in the anchor calculations for determining the minimum required anchor quantities shown on these drawings

The frame must be shimmed with a type of shim complying with the Florida Building Code and is capable of resisting the frame's rotation

Ballard L. Argus, P.E.
844 NW 91st Terrace
Plantation, Florida 33324
1-(954)-581-7678

Approved as complying with the Florida Buiding Code
Date 08/19/04
NOA# 04-0406.02
Miami Dade Product Control Division
By

7/8/04
FL# 35686

Fastener locations

ARCHITECT:	
CONTRACTOR:	
SERIES: 2310	TYPE:
FINISH:	
ACTUATION:	
Single slide Fastner Locations	
Dwg. No. 040302-S	

Horton AUTOMATICS
A DIVISION OF OVERHEAD DOOR CORPORATION
4242 BALDWIN BOULEVARD
CORPUS CHRISTI, TEXAS 78405-3399
361-888-5591 1-800-531-3111
FAX: 361-888-6510, 1-800-531-3108
http://www.hortondoors.com

JOB: METRO-DADE	
LOCATION:	
DISTRIBUTOR:	
DWN:	P.O. # / SHEET 5 of 8
CHK:	DATE: 03-02-04 / REVISION:

ITEM #	HORTON PART NUMBER	DESCRIPTION
1	C00265.000R	ALUMINUM EXTRUSION: HEADER
2	C00266.000R	ALUMINUM EXTRUSION:FACEPLATE
3	C00264.000R	ALUMINUM EXTRUSION:TRAY
4	C00314.000R	ALUMINUM EXTRUSION:INTERLOCK TOP
5	C00327.000R	ALUMINUM EXTRUSION:INTERLOCK LOWER
6	C00337.000R	ALUMINUM EXTRUSION:TOP RAIL
7	C00370.0001	ALUMINUM EXTRUSION:GLASS STOP
8	C00283.0000	ALUMINUM EXTRUSION:BOTTOM RAIL
9	C00315.0000	ALUMINUM EXTRUSION:TRACK FILLER
10	C00330.0001	ALUMINUM EXTRUSION: BOTTOM GUIDE
11	C00386.0001	ALUMINUM EXTRUSION: ADAPTOR
12	C00342.04FL	ALUMINUM EXTRUSION: BOTTOM RAIL
13	C02801.000AB	ALUMINUM EXTRUSION: HORIZONTAL RAIL
14	C02899.0002	ALUMINUM EXTRUSION: CORNER BLOCK (used as reinforcement)
15	C00390.0000	ALUMINUM EXTRUSION: THRESHOLD 7"
16	C00300.000AB	ALUMINUM EXTRUSION: JAMB TUBE 4" X 1-3/4"
17	C00323.0000	ALUMINUM EXTRUSION: VERTICAL RAIL
18	C00363.0000	ALUMINUM EXTRUSION: VERTICAL RAIL
19	C00818.000R	BAR TORSION (serves as slide panel top pivot)
20	C02798.0001	ALUMINUM EXTRUSION: ADAPTOR
21	C02873.0000	THRESHOLD
22	C00379.001ABC	GLASS STOP
23	C00338.000R	GLASS STOP
24	C00343.001R	ALUMINUM EXTRUSION; HORIZONTAL RAIL
25	C00589.0000	PIVOT
26	C00888.002AB	CLIP INTERLOCK
27	C00524.00FL	WEATHERSEAL BRUSH Felton #490621
28	C00350.0000	NOSING SEAL SCHLEGEL #1104-5101
29	C00397.0000	INTERLOCK SEAL SHCLEGEL #7595-6011-0
30	C00293.0000	WEATHERSEAL BRUSH Schlegel #8430-5016-7
31	C00454.0000	LOCK, MAX SECURITY AR MS1850S
32	C00463.0000	THUMBTURN AR 4066
33	C00487.0000	EXIT INDICATOR AR 4089
34	C00883.0000	3/8" HEX BOLT AR 4015 EXTENDING INTO HEAD AND SILL 1/2"
35	C00843.01FL	BOTTOM GUIDE DOOR MOUNTED
36	C00844.01FL	BOTTOM GUIDE DOOR MOUNTED
37	C01987.0000	STEEL TUBE 1" X 1 " X 1/8" **A 500**
38	C00426.0001	5/16 SPACER
39	C00453.0000	#10 X 5/8 PHSMS
40	C00450.0000	#10 X 1-1/2 FHSMS
41	C00437.0000	#10-24 X 1/2" FHMS EVERY 12" IN SIDELITES
42	C00404.0000	1/4-20 LOCKNUT
43	C02899.0002	ALUMINUM EXTRUSION: CORNER BLOCK (used as reinforcement)
44	C00417.0000	#14 X 1-1/2 HWSMS EVERY 12" IN SIDELITES
45	C07141.0000	#10-24 X 1" FHMS EVERY 12" IN SIDELITES
46	C02130.01FL	DRIVE WHEEL ASSEMBLY
47	C00815.0RFL	WHEEL ASSEMBLY
48	C00817.00FL	IDLER WHEEL ASSEMBLY
49	C00448.0000	PLATE, 4-5/8" X 8" X 1/8" ALUMINUM LOCATED UNDER THRESHOLD AT LOCK BOLTS
50	C00437.0000	#10-24 X 1/2" FHMS, 4 IN EACH PLATE ITEM 49
51	C00693.0003	CORNER BLOCK
52	C08150.0000	1/4-20 X 3/4 HHMB
53	C00536.0004	CORNER BLOCK
54	C09490.0001	CORNER BLOCK
55	C01044.0001	CORNER BLOCK
56	C00437.0000	#10-24 X 1/2" FHMS 2 EACH AT EVERY 12"
57	C00341.0001	VINYL GLAZING BULB
58	C00291.0001	TRACK CAP
59	C00380.0001	TRACK
60	C00358.000R	ALUMINUM EXTRUSION: ASTRAGAL
61	C00664.001AB	#8 X 3/4 FHSMS
62	C02361.0000	EXIT DEVICE AR G86H
63	C00278.001ABC	PUSHBAR; ALUMINUM TUBE
64	C09719.0000	3/8-16 ALL THREAD THRU BOLT IN ALL HORIZONTALS
65	C00371.000R	WEATHERSTRIP; PANEL TO JAMB
66	C00398.0000	ALUMINUM EXTRUSION; MOHAIR ADAPTOR
67	C00389.00FL	ADAPTOR FOR ITEM 29
68	C00289.0000	TRACK CAP
69	C00536.0003	CORNER BLOCK
70	C08141.0000	1/4-20 X 1" FHMS EVERY 12"

Approved as complying with the Florida Buiding Code
Date 08/19/04
NOA# 04-0406.02
Miami Dade Product Control Division
By

Ballard L. Argus, P.E.
844 NW 91st Terrace
Plantation, Florida 33324
1-(954)-581-7678

7/8/04
FL# 35681

ARCHITECT:		
CONTRACTOR:		
SERIES:	TYPE:	
FINISH:		
ACTUATION:		
Bill of materials Dwg. No. 040302-S		

Horton AUTOMATICS
A DIVISION OF OVERHEAD DOOR CORPORATION
4242 BALDWIN BOULEVARD
CORPUS CHRISTI, TEXAS 78405-3399
361-888-5591 1-800-531-3111
FAX: 361-888-6510, 1-800-531-3108
http://www.hortondoors.com

JOB: METRO-DADE		
LOCATION:		
DISTRIBUTOR:		
DWN:	P.O. #	SHEET 6 of 8
CHK:	DATE: 03-02-04	REVISION:

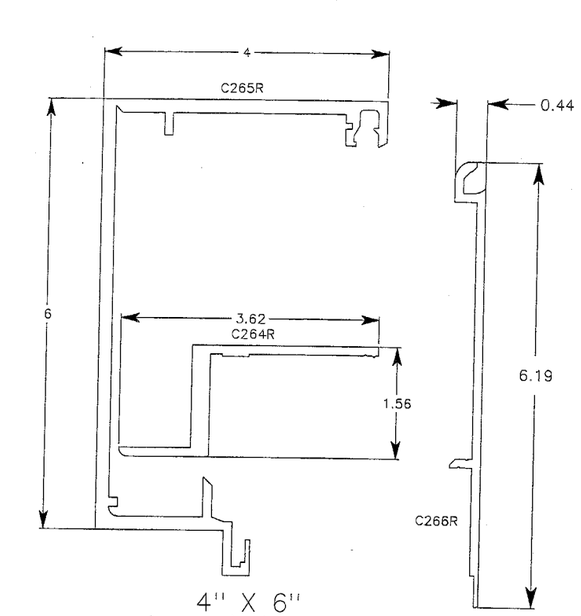

4" X 6"
(101.6) (152.4)
ASSEMBLED

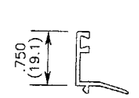

C340R

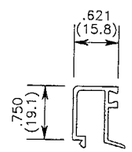

C370-1

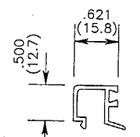

C338R

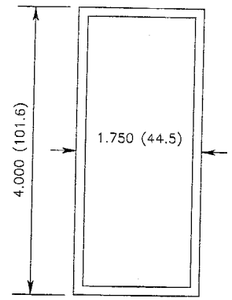

C300

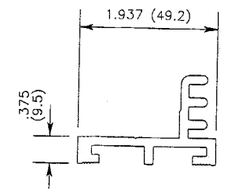

C386-1

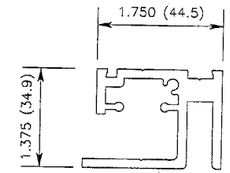

C330-1

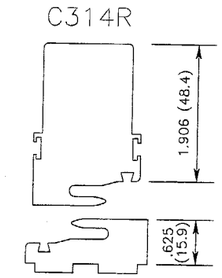

C327R

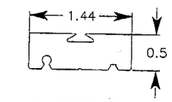

C 2899-2

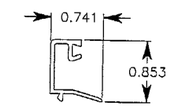

C 379-1

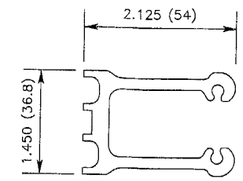

C339R
6063-T6

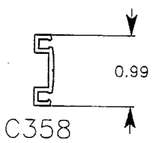

C358

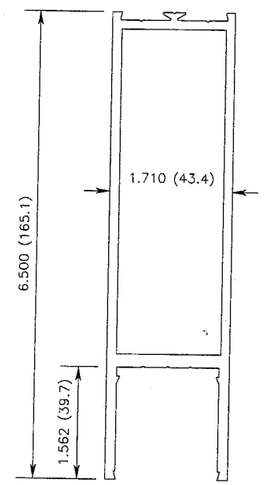

C283

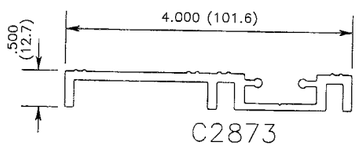

C2873

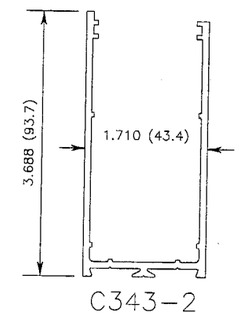

C343-2

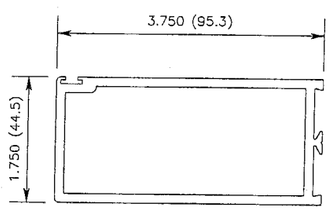

C323

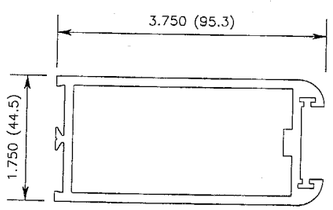

C363

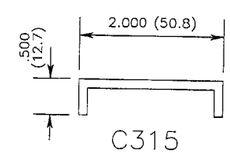

C315
6061-T5

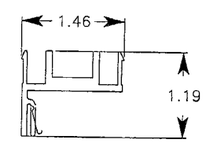

C2798-1

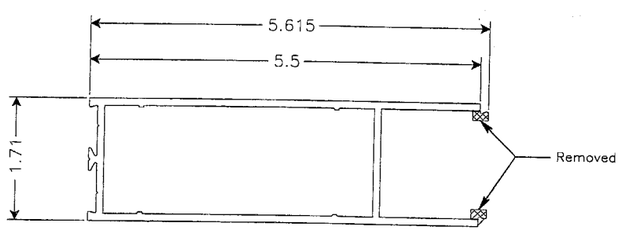

C 342-4

NOTE: For C342-4FL This rail is ripped

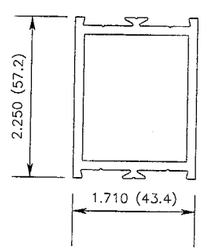

C337

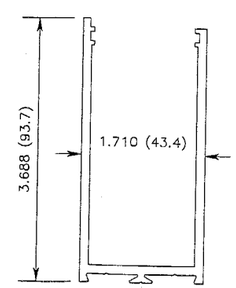

C343-1

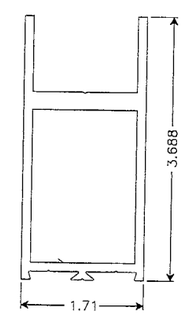

C2801

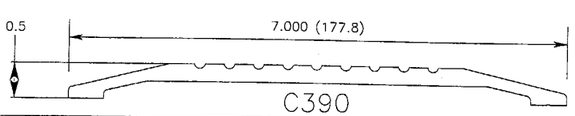

C390

ALL EXTRUSIONS ARE 6063-T5 UNLESS OTHERWISE NOTED

Approved as complying with the Florida Buiding Code
Date 08/19/04
NOA# 04-0406.02
Miami-Dade Product Control Division
By

7/8/04
Ft # 35686

Ballard L. Argus, P.E.
844 NW 91st Terrace
Plantation, Florida 33324
1-(954)-581-7678

ARCHITECT:		Horton AUTOMATICS — A DIVISION OF OVERHEAD DOOR CORPORATION, 4242 BALDWIN BOULEVARD, CORPUS CHRISTI, TEXAS 78405-3399, 361-888-5591 1-800-531-3111, FAX: 361-888-8510, 1-800-531-3108, http://www.hortondoors.com
CONTRACTOR:		
SERIES:	TYPE:	
FINISH:		
ACTUATION:		JOB: METRO-DADE
Extrusion chart		LOCATION:
Dwg. No. 040302-S		DISTRIBUTOR:
DWN:	P.O. #	SHEET 7 of 8
CHK:	DATE: 03-02-04	REVISION:

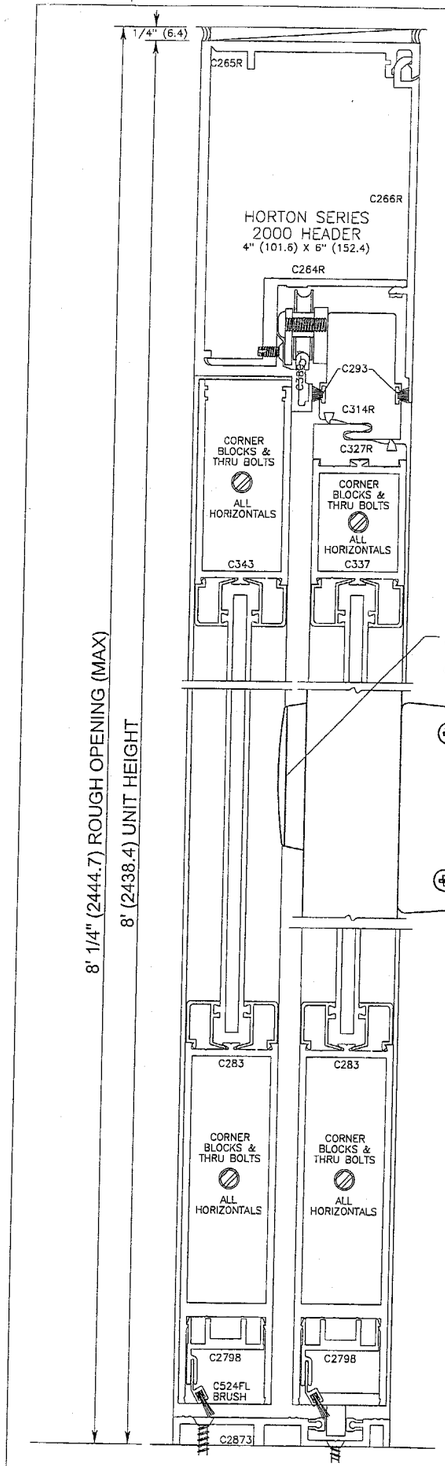

VERTICAL SECTION 1/1

DOOR SHOWN IN OPEN POSITION

NOTE: DIMENSIONS IN PARENTHESIS ( ) ARE METRIC MILLIMETER EQUIVALENTS

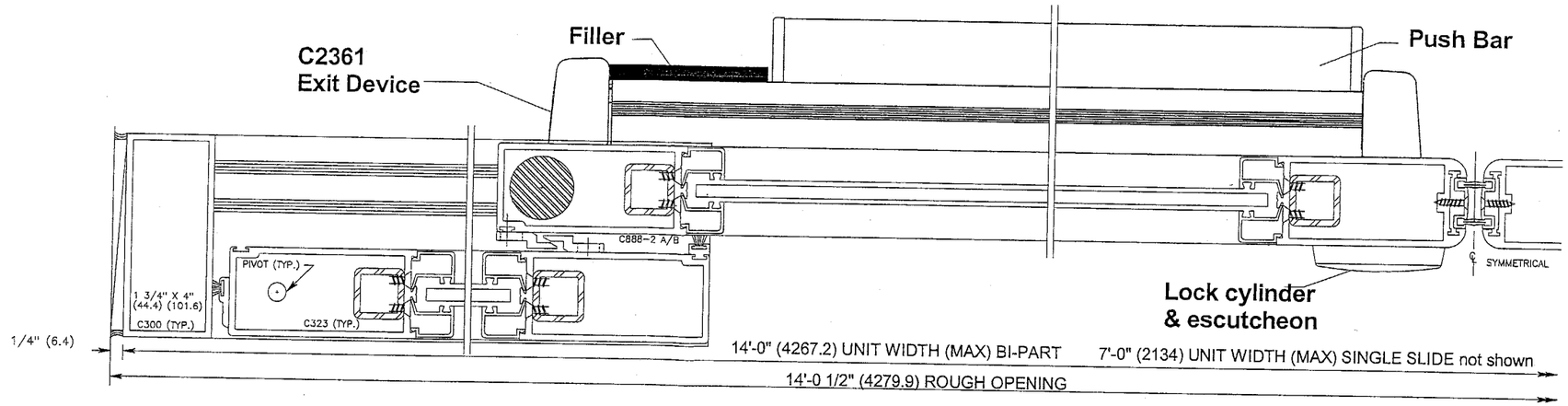

HORIZONTAL SECTION 2/1

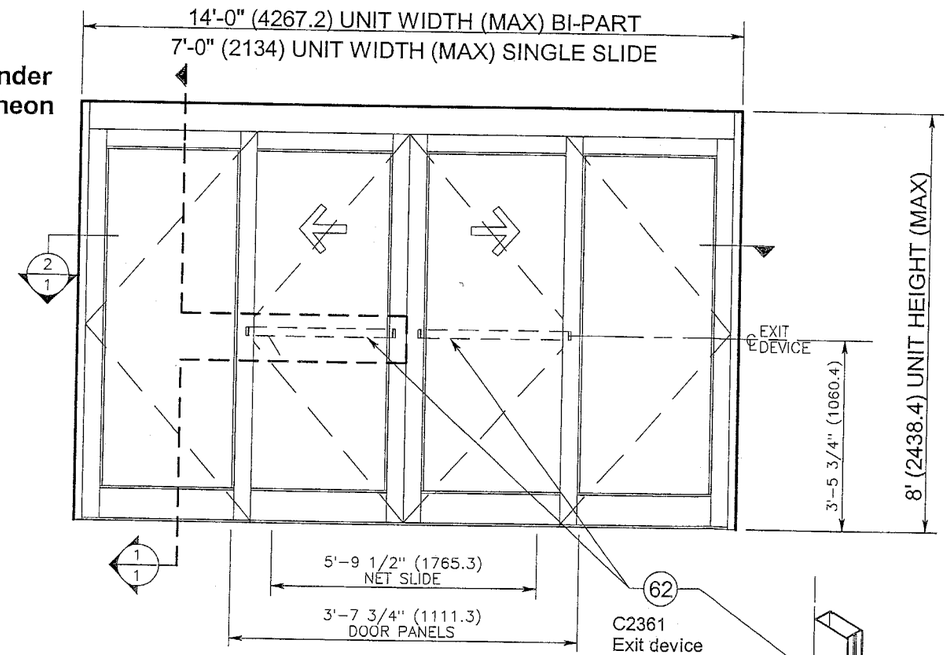

ELEVATION 4/1

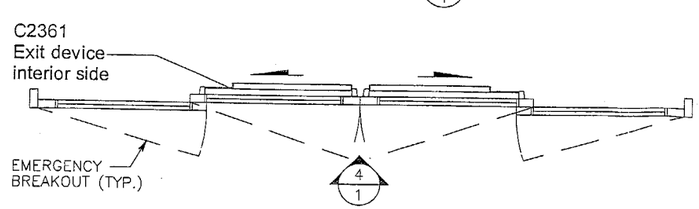

FLOOR PLAN 5/1

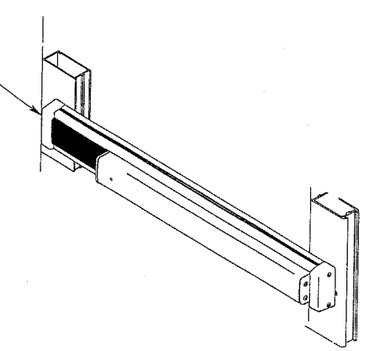

Approved as complying with the Florida Buiding Code
Date 08/19/04
NOA# 04-0406.02
Miami-Dade Product Control Division
By

7/8/04
Fl # 35686

Ballard L. Argus, P.E.
844 NW 91st Terrace
Plantation, Florida 33324
1-(954)-581-7678

See sheet 3

Exit Device for Series 310 Impact small Missile

ARCHITECT:	
CONTRACTOR:	
SERIES: 2310	TYPE: SO-SX-SX-SO & SO-SX
FINISH:	
ACTUATION:	
C2361 Exit Device	
Dwg. No. 040302-S	

Horton AUTOMATICS
A DIVISION OF OVERHEAD DOOR CORPORATION
4242 BALDWIN BOULEVARD
CORPUS CHRISTI, TEXAS 78405-3399
361-888-5591 1-800-531-3111
FAX: 361-888-8510, 1-800-531-3108
http://www.hortondoors.com

JOB: METRO-DADE		
LOCATION:		
DISTRIBUTOR:		
DWN:	P.O. #	SHEET 8 of 8
CHK:	DATE: 03-02-04	REVISION: