MIAMI-DADE

BUILDING CODE COMPLIANCE OFFICE (BCCO)
PRODUCT CONTROL DIVISION

MIAMI-DADE COUNTY, FLORIDA
METRO-DADE FLAGLER BUILDING
140 WEST FLAGLER STREET, SUITE 1603
MIAMI, FLORIDA 33130-1563
(305) 375-2901 FAX (305) 375-2908

NOTICE OF ACCEPTANCE (NOA)

Hendee Enterprises, Inc.
9350 South Point Drive
Houston, TX 77054

SCOPE:
This NOA is being issued under the applicable rules and regulations governing the use of construction materials. The documentation submitted has been reviewed by Miami-Dade County Product Control Division and accepted by the Board of Rules and Appeals (BORA) to be used in Miami Dade County and other areas where allowed by the Authority Having Jurisdiction (AHJ).

This NOA shall not be valid after the expiration date stated below. The Miami-Dade County Product Control Division (In Miami Dade County) and/or the AHJ (in areas other than Miami Dade County) reserve the right to have this product or material tested for quality assurance purposes. If this product or material fails to perform in the accepted manner, the manufacturer will incur the expense of such testing and the AHJ may immediately revoke, modify, or suspend the use of such product or material within their jurisdiction. BORA reserves the right to revoke this acceptance, if it is determined by Miami-Dade County Product Control Division that this product or material fails to meet the requirements of the applicable building code.

This product is approved as described herein, and has been designed to comply with the High Velocity Hurricane Zone of the Florida Building Code.

DESCRIPTION: "Force 12" Impact Resistant Screen Membrane Structure System

APPROVAL DOCUMENT: Drawing No. F1201, titled "Force 12 panel mounting cross sections", sheets 1 thru 9 of 9, dated May 3, 2000, last revision dated 07/19/2001, sheets 1 to 4, and 06/26/2001, sheets 5 to 9, all prepared, signed & sealed by Robert R. Bullard, P.E., bearing the Miami-Dade County Product Control Renewal stamp with the Notice of Acceptance number and expiration date by the Miami-Dade County Product Control Division.

MISSILE IMPACT RATING: Large and Small Missile Impact

LABELING: Each unit shall bear a permanent label with the manufacturer's name or logo, city, state and the following statement: "Miami-Dade County Product Control Approved", unless otherwise noted herein.

RENEWAL of this NOA shall be considered after a renewal application has been filed and there has been no change in the applicable building code negatively affecting the performance of this product.

TERMINATION of this NOA will occur after the expiration date or if there has been a revision or change in the materials, use, and/or manufacture of the product or process. Misuse of this NOA as an endorsement of any product, for sales, advertising or any other purposes shall automatically terminate this NOA. Failure to comply with any section of this NOA shall be cause for termination and removal of NOA.

ADVERTISEMENT: The NOA number preceded by the words Miami-Dade County, Florida, and followed by the expiration date may be displayed in advertising literature. If any portion of the NOA is displayed, then it shall be done in its entirety.

INSPECTION: A copy of this entire NOA shall be provided to the user by the manufacturer or its distributors and shall be available for inspection at the job site at the request of the Building Official.

This NOA **renews NOA # 02-0419.02** and consists of this page 1, evidence submitted page(s) as well as approval document mentioned above.

The submitted documentation was reviewed by **Helmy A. Makar, P.E.**

PRODUCT CONTROL ACCEPTED

Helmy A. Makar
05/27/2004

NOA No 04-0413.04
Expiration Date: 08/29/2009
Approval Date: 05/27/2004

Hendee Enterprises, Inc.

NOTICE OF ACCEPTANCE: EVIDENCE SUBMITTED

1. EVIDENCE SUBMITTED UNDER PREVIOUS APPROVAL #00-0929.12

A. DRAWINGS

1. *Drawing No. F1201, titled "Force 12", prepared by Absolute Engineering Group CA-7895, dated May 3, 2000, last revision #5 dated July 19, 2001, sheets 1 through 9 of 9, signed and sealed by Robert R. Bullard, P.E.*

B. TESTS

1. *Test report on Large Missile Impact Test, Cyclic Wind Pressure Test, and Static Wind Pressure Test of Hendee Enterprises Force 12 Protective Screen System, prepared by National Certified Testing Laboratories, Report No. NCTL 210-2310-1, 2, 3, dated May 2, 2001, signed and sealed by Barry Portnoy, P.E.*
2. *Addendum #1 to Test Report No. NCTL 210-2310-1, 2, 3, dated March 2, 2001, signed and sealed by Barry Portnoy, P.E.*
3. *Addendum #2 to Test Report No. NCTL 210-2310-1, 2, 3, dated May 2, 2001, signed and sealed by Barry Portnoy, P.E.*

C. CALCULATIONS

1. *Calculations, dated June 7, 2001, page 1 of 1, prepared by Robert R. Bullard, P.E., signed and sealed by Robert R. Bullard, P.E.*

D. MATERIAL CERTIFICATIONS

1. *Mill certified Inspection Report with screen's physical properties.*

2. EVIDENCE SUBMITTED UNDER PREVIOUS APPROVAL #02-0419.02

A. DRAWINGS

See NOA 00-0929.12

B. TESTS

See NOA 00-0929.12

C. CALCULATIONS

See NOA 00-0929.12

D. MATERIAL CERTIFICATIONS

See NOA 00-0929.12

E. STATEMENTS

See NOA 00-0929.12

Helmy A. Makar

Helmy A. Makar, P.E.
Product Control Examiner
NOA No 04-0413.04
Expiration Date: 08/29/2009
Approval Date: 05/27/2004

NOTICE OF ACCEPTANCE: EVIDENCE SUBMITTED

F. OTHER
NOA **00-0929.12**

3. NEW EVIDENCE SUBMITTED

A. DRAWINGS

1. *Drawing No. F1201, titled "Force 12 panel mounting cross sections", sheets 1 thru 9 of 9, dated May 3, 2000, last revision dated 07/19/2001, sheets 1 to 4, and 06/26/2001, sheets 5 to 9, all prepared, signed & sealed by Robert R. Bullard, P.E.*

B. TESTS

1. *None.*

C. CALCULATIONS

1. *None.*

D. QUALITY ASSURANCE

1. *By Miami-Dade County Building Code Compliance Office.*

E. MATERIAL CERTIFICATIONS

1. *None.*

Helmy A. Makar, P.E.
Product Control Examiner
NOA No 04-0413.04
Expiration Date: 08/29/2009
Approval Date: 05/27/2004

FORCE 12 PROTECTION

FLEXIBLE WIND ABATEMENT SCREEN SYSTEM

GENERAL NOTES

1. THIS PRODUCT IS DESIGNED TO MEET THE SOUTH FLORIDA BUILDING CODE 1994 EDITION FOR MIAMI-DADE COUNTY.
2. WOOD FRAMING MEMBERS BY OTHERS, MUST BE ANCHORED PROPERLY TO TRANSFER LOADS TO THE STRUCTURE. WOOD FRAMING MEMBERS SHALL BE "SOUTHERN PINE" WITH G=0.55 OR GREATER DENSITY.
3. PRODUCT ANCHORS SHALL BE AS LISTED AND SPACED AS SHOWN ON DETAILS. ANCHOR EMBEDMENT TO BASE MATERIAL SHALL BE BEYOND WALL DRESSING OR STUCCO.
4. DESIGN PRESSURE RATING: SEE CHART BELOW.
5. THE DETAILS AND SPECIFICATIONS SHOWN HEREIN REPRESENT THE PRODUCT TESTED FOR IMPACT, CYCLIC, AND UNIFORM STATIC AIR PRESSURE TESTING (5) (4) IN CONFORMANCE WITH MIAMI-DADE COUNTY PROTOCOLS PA-201, 203 & 202. REFERENCE NATIONAL CERTIFIED TESTING LABORATORIES REPORT NCTL 210-2310-1,2,3

HURRICANE SCREEN CONSTRUCTION
(COMMON TO ALL CONDITIONS)

SCREEN & SCREEN TRACK CONSTRUCTION:

SCREEN:

THE SCREEN IS MANUFACTURED FROM A WOVEN POLYPROPYLENE MONOFILAMENT GEOTEXTILE FABRIC WITH INDIVIDUAL FILAMENTS WOVEN INTO A BASKET WEAVE NETWORK AND CALENDERED SUCH THAT THE FILAMENTS RETAIN DIMENSIONAL STABILITY RELATIVE TO EACH OTHER. (4)

SCREEN CONFIGURATION: SEE SHTS. 4 & 5 OF 9

THE SCREEN IS MANUFACTURED IN (3) STYLES, VERTICAL SEAM, HORIZONTAL SEAM & NON-SEAMED OVERLAPPED FABRIC PANELS. THE MAXIMUM PANEL HEIGHT IS 12'-0".

SCREEN TRACK:

THE SCREEN TRACK IS EXTRUDED FROM 6063-T6 ALUMINUM.

DESIGN PRESSURE RATING		
POSITIVE	(4)	+ 60.0 psf
NEGATIVE	(4)	- 60.0 psf

SCREEN TO GLASS SEPARATION 12 2'-5" (MIN.) AT MID-SPAN OF SCREEN.

ROBERT R. BULLARD, P.E. 18544
ABSOLUTE ENGINEERING GROUP CA-7895
140 SOUTH BEACH ST. #400
DAYTONA BEACH, FL 32114
PHONE: 386-254-2909
FAX: 386-255-9419

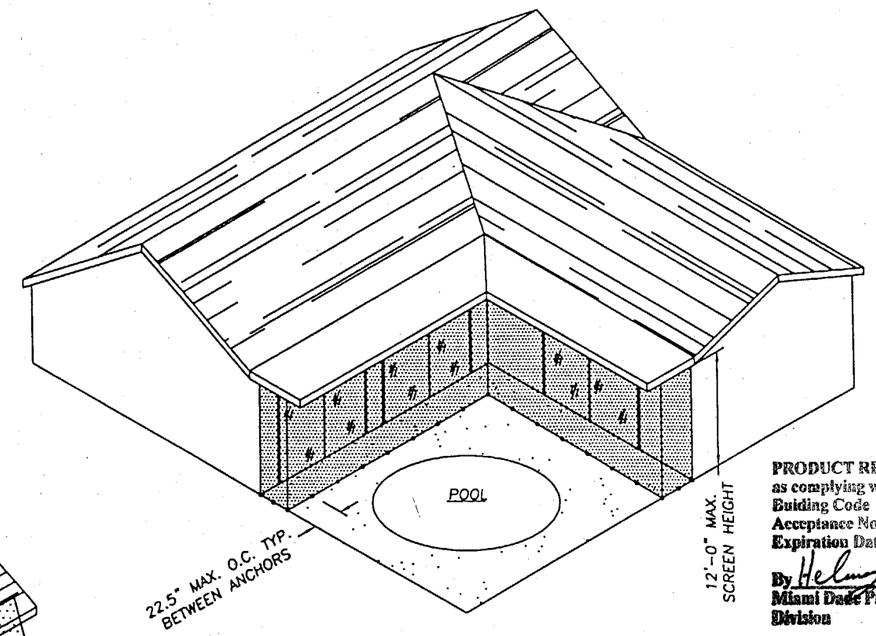

ELEVATION #1
APPLICATION ON A LANAI
LANAI SCREEN REMOVED FOR CLARITY
SEE SECTION 1/3 SHT. 3

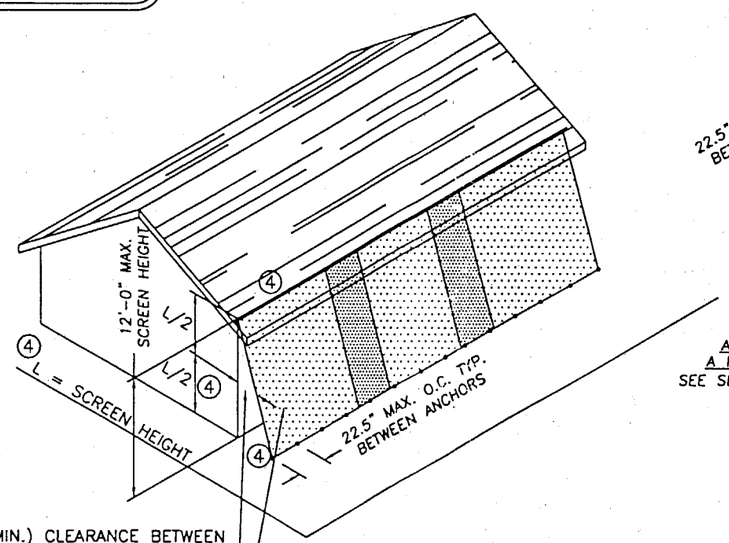

(4) 2'-5" (MIN.) CLEARANCE BETWEEN SCREEN AND PROTECTED OPENING GLAZING AT MID-HEIGHT OF FABRIC SCREEN.

SCREEN SHALL BE EXTENDED 2'-0" (MIN.) AT EACH SIDE OF THE OPENING IT PROTECTS OR PROVIDE SIDE CLOSURE SCREEN AT EACH SIDE OF THE OPENING.

ELEVATION #2
APPLICATION COVERING
A HOUSE OR SHOP FRONT
SEE SECTIONS 3/2 & 4/2 SHT. 2

PRODUCT RENEWED
as complying with the Florida Buiding Code
Acceptance No. 04-0413.04
Expiration Date 08/29/2009
By Helmy A. Melen
Miami Dade Product Control Division

PRODUCT REVISED
as complying with the Florida Buiding Code
Acceptance No. 02-0419.02
Expiration Date August 29, 2004
By
Miami Dade Product Control Division

APPROVED AS COMPLYING WITH THE SOUTH FLORIDA BUILDING CODE
DATE 08/29/2001
BY Helmy A. Melen
PRODUCT CONTROL DIVISION
BUILDING CODE COMPLIANCE OFFICE
ACCEPTANCE NO. 00-0929.12

R. Bullard P.E.
07/19/01

REVISIONS			
BY:	LTR.	DATE	DESCRIPTION
LS	0	5/8/01	ISSUED FOR CITY PERMIT
RB	1	6/11/01	REVISED PER NOTES
RRB	(4)	6/26/01	REVISED PER NOTES
RRB	(5)	7/19/01	EDIT TEXT

Hendee Enterprises, Inc.
The Innovative Solutions Company
P.O.Box 4289, Houston, TX 77210-4289 9350 South Point Dr., Houston, TX 77054
(713) 796-2322 Fax (713) 796-0494 (800) 231-7275 (Nat'l) (800) 323-3641 (Texas)

TITLE: FORCE 12
PANEL MOUNTING CROSS SECTIONS

CLIENT: VARIES
LOCATION: VARIES

DRAWN BY: RB	SCALE: NTS	SHEET 1 OF 9
DATE: 05/03/00	DOCUMENT NO: F1201_1	REV: 5

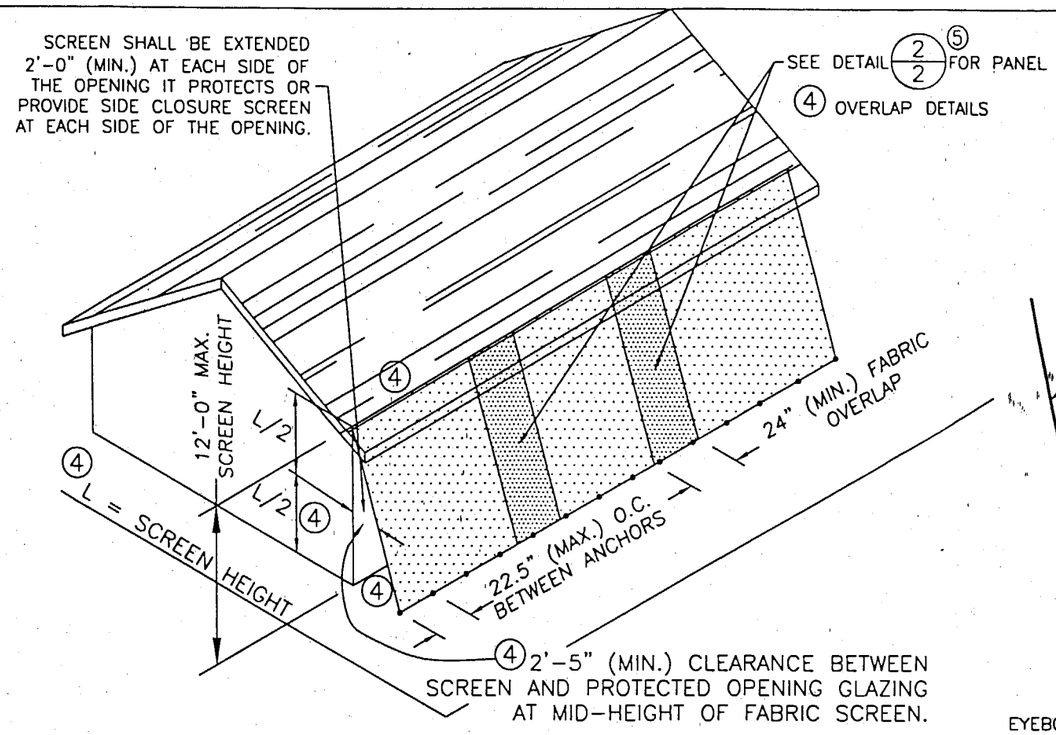

1/2 PANEL OVERLAP – IN APPLICATION
SCALE: NTS = 1'-0"

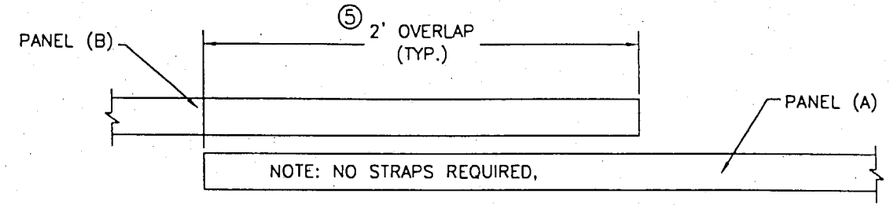

5/2 PANEL OVERLAP – SECTION
SCALE: NTS = 1'-0"

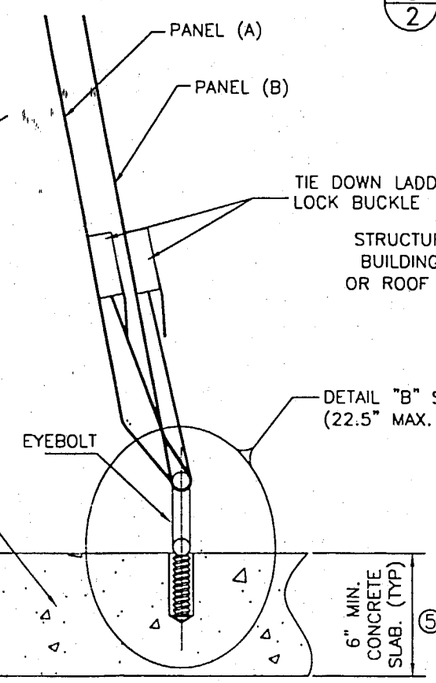

4/2 PANEL ATTACHMENT – AT BASE
SCALE: NTS = 1'-0"

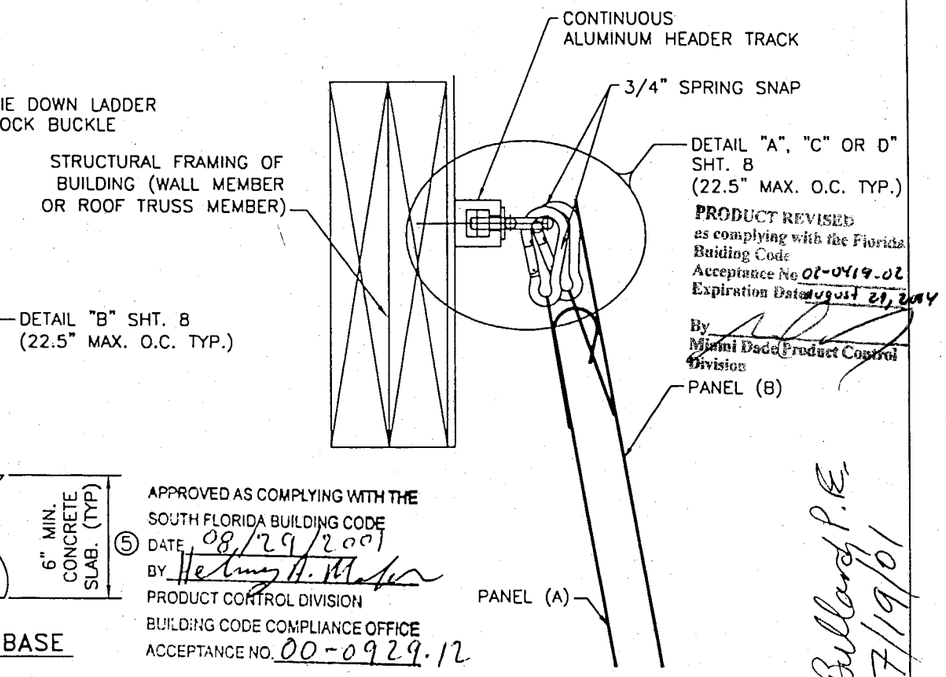

3/2 PANEL ATTACHMENT – AT TOP
SCALE: NTS = 1'-0"

PRODUCT REVISED
as complying with the Florida Building Code
Acceptance No 02-0419.02
Expiration Date August 21, 2004
By
Miami Dade Product Control Division

APPROVED AS COMPLYING WITH THE SOUTH FLORIDA BUILDING CODE
DATE 08/29/2001
BY Helmy H. Moker
PRODUCT CONTROL DIVISION
BUILDING CODE COMPLIANCE OFFICE
ACCEPTANCE NO. 00-0929.12

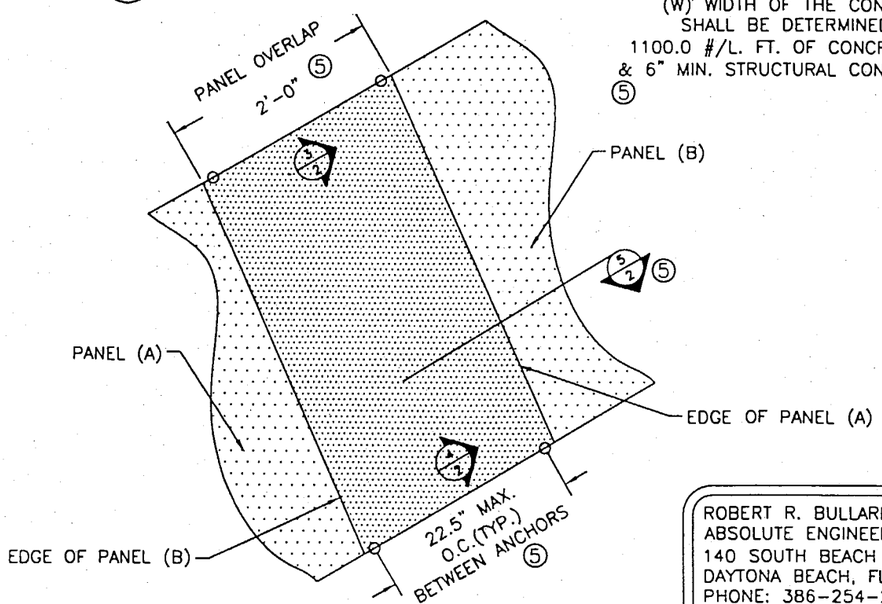

2/2 PANEL OVERLAP – SECTION
SCALE: NTS = 1'-0"

PRODUCT RENEWED
as complying with the Florida Building Code
Acceptance No 04-0413.04
Expiration Date 08/29/2009
By Helmy H. Moker
Miami Dade Product Control Division

ROBERT R. BULLARD, P.E. 18544
ABSOLUTE ENGINEERING GROUP CA-7895
140 SOUTH BEACH ST. #400
DAYTONA BEACH, FL 32114
PHONE: 386-254-2909
FAX: 386-255-9419

REVISIONS

BY:	LTR.	DATE	DESCRIPTION
RB	0	3.14.01	ADDITIONAL PERMIT DRAWINGS
LS	1	4.24.01	REV. PER CITY REQUIREMENTS
RB	2	6.11.01	REVISED PER NOTES
RRB	(4)	6/26/01	REVISED PER NOTES
RRB	(5)	7/19/01	ENLARGE/EDIT TEXT

Hendee Enterprises, Inc.
The Innovative Solutions Company
P.O.Box 4289, Houston, TX 77210-4289 9350 South Point Dr., Houston, TX 77054
(713) 796-2322 Fax (713) 796-0494 (800) 231-7275 (Nat'l) (800) 323-3641 (Texas)

TITLE: FORCE 12
PANEL MOUNTING CROSS SECTIONS

CLIENT: VARIES
LOCATION: VARIES

DRAWN BY: RB | SCALE: NTS | SHEET 2 OF 9
DATE: 05/03/00 | DOCUMENT NO: F1201_2 | REV: 5

RRBullard P.E. 07/19/01

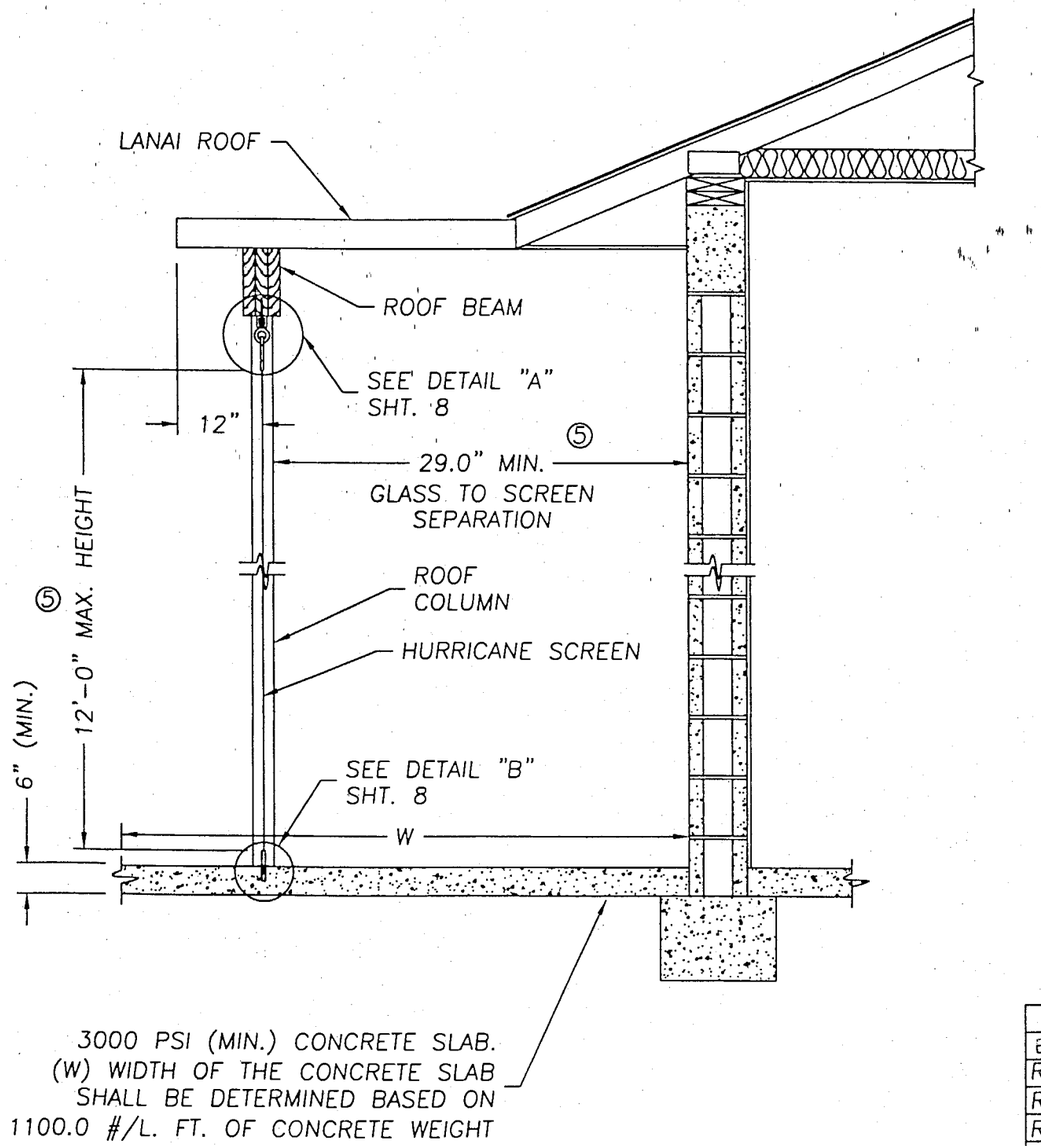

1/3 VERTICAL CROSS SECTION AT LANAI
WOOD TO CONCRETE VERTICAL MOUNTING

PRODUCT RENEWED
as complying with the Florida
Building Code
Acceptance No. 04-0413.04
Expiration Date 08/29/2009
By Helmy A. Mahar
Miami Dade Product Control
Division

PRODUCT REVISED
as complying with the Florida
Building Code
Acceptance No. 02-0419.02
Expiration Date August 29, 2004
By
Miami Dade Product Control
Division

APPROVED AS COMPLYING WITH THE
SOUTH FLORIDA BUILDING CODE
DATE 08/29/2001
BY Helmy A. Mahar
PRODUCT CONTROL DIVISION
BUILDING CODE COMPLIANCE OFFICE
ACCEPTANCE NO. 00-0929.12

ROBERT R. BULLARD, P.E. 18544
ABSOLUTE ENGINEERING GROUP CA-7895
140 SOUTH BEACH ST. #400
DAYTONA BEACH, FL 32114
PHONE: 386-254-2909
FAX: 386-255-9419

RBullard, P.E.
07/19/01

REVISIONS

BY:	LTR.	DATE	DESCRIPTION
RB	1	6.11.01	REVISED PER NOTES
RRB	④	6.26.01	REMOVE NCTL NOTE
RRB	⑤	7.19.01	ENLARGE/EDIT TEXT

Hendee Enterprises, Inc.
The Innovative Solutions Company
P.O.Box 4289, Houston, TX 77210-4289 9350 South Point Dr., Houston, TX 77054
(713) 796-2322 Fax (713) 796-0494 (800) 231-7275 (Nat'l) (800) 323-3641 (Texas)

TITLE: FORCE 12
PANEL MOUNTING CROSS SECTIONS

CLIENT: VARIES
LOCATION: VARIES

DRAWN BY: RB | SCALE: NTS | SHEET 3 OF 9
DATE: 05/03/00 | DOCUMENT NO: F1201_3 | REV: 5

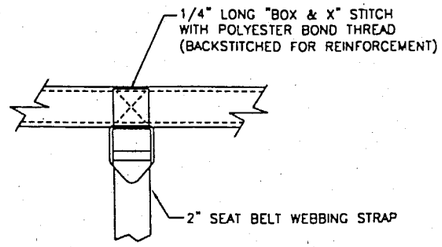

PLAN VIEW

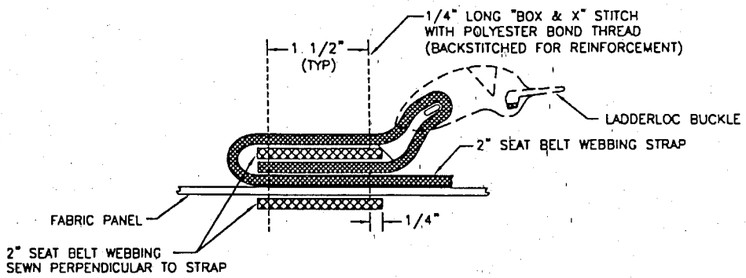

ATTACHMENT OF TIE-DOWN LADDERLOC DETAIL TO SCREEN
AT THE BOTTOM OF SCREEN

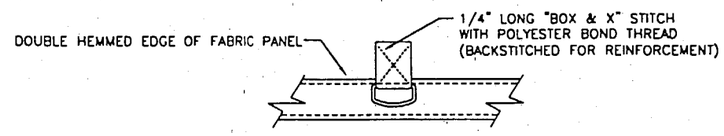

PLAN VIEW

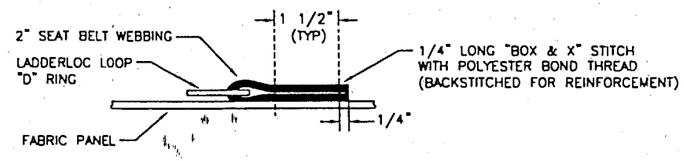

ATTACHMENT OF LADDERLOC LOOP DETAIL TO SCREEN
AT THE BOTTOM OF SCREEN

APPROVED AS COMPLYING WITH THE
SOUTH FLORIDA BUILDING CODE
DATE 08/29/2001
BY [signature]
PRODUCT CONTROL DIVISION
BUILDING CODE COMPLIANCE OFFICE
ACCEPTANCE NO. 00-0929.12

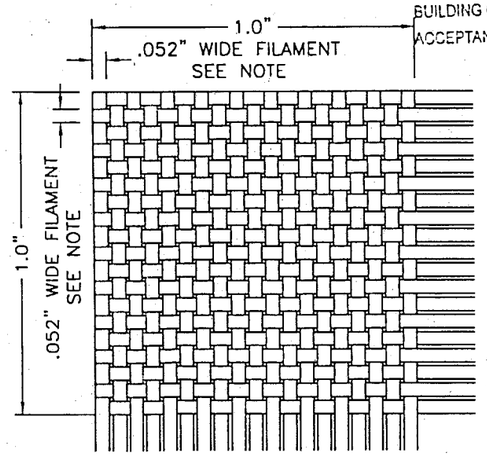

1 SQ. INCH OF SCREEN WEAVE PATTERN

PRODUCT RENEWED
as complying with the Florida
Building Code
Acceptance No 04-0413.04
Expiration Date 08/29/2009
By [signature]
Miami Dade Product Control
Division

NOTE:
THERE ARE (19) .052" WIDE FILAMENTS, BOTH HORIZONTALLY & VERTICALLY IN A SQUARE INCH OF AWNING. EACH FILAMENT IS MADE UP OF (3) .013" WIDE SUB FILAMENTS.

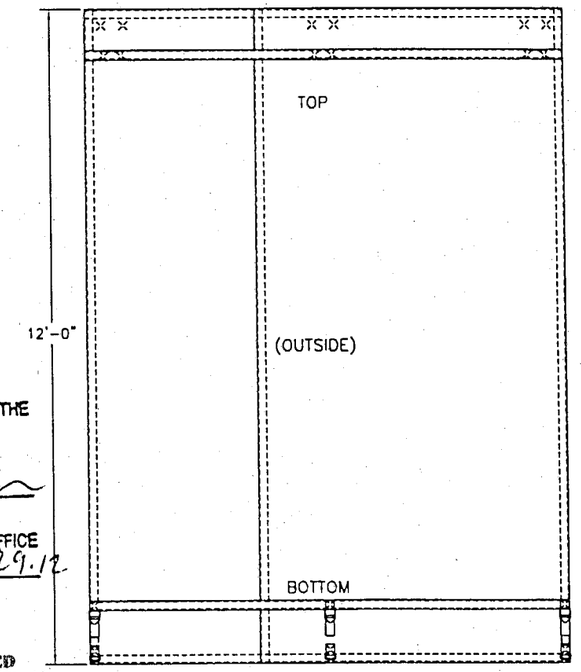

HURRICANE SCREEN ELEVATION

(OUTSIDE STITCHING DETAILS. THE SCREEN IS MANUFACTURED IN (3) STYLES; VERTICAL SEAM, HORIZONTAL SEAM, & NON-SEAMED OVERLAPPED FABRIC PANELS)

PRODUCT REVISED
as complying with the Florida
Building Code
Acceptance No 02-0419.02
Expiration Date August 29, 2004
By [signature]
Miami Dade Product Control
Division

R.R. Bullard P.E.
07/19/01

ROBERT R. BULLARD, P.E. 18544
ABSOLUTE ENGINEERING GROUP CA-7895
140 SOUTH BEACH ST. #400
DAYTONA BEACH, FL 32114
PHONE: 386-254-2909
FAX: 386-255-9419

FORCE 12 - MATERIAL SPECIFICATIONS OF SCREEN	
FIBER CONTENT	100% POLYPROPYLENE
COLOR	BLACK OR ROYAL BLUE
FINISH	TENTERED & CALENDERED
CONSTRUCTION (APPROXIMATE)	WARP: 60 FILL: 50
WEAVE	3/4" BASKET WEAVE
THICKNESS	20 MILS
WEIGHT, (ASTM D-3776-85)	7.6 OZ/YD^2
ABRASION RESISTANCE (ASTM D-3884)	WARP: 190 LBS FILL: 250 LBS
TENSILE STRENGTH (ASTM D-1682, GRAB METHOD)	WARP: 445 LBS FILL: 375 LBS
TEAR STRENGTH (ASTM D-2261, TRAP METHOD)	WARP: 185 LBS FILL: 190 LBS
BURST STRENGTH (ASTM D-3786 MULLEN)	720 LBS/IN^2
PUNCTURE STRENGTH (ASTM D-3787, MODIFIED)	165 LBS
U.V. RESISTANCE (ASTM G-53, % RETAINED AT 5,000 HOURS)	90%
AIR FLOW	230 CFM

REVISIONS			
BY:	LTR.	DATE	DESCRIPTION
RB	0	3.14.01	ADDITIONAL PERMIT
			DRAWINGS.
LS	1	4.24.01	REVISED PER CITY
			REQUIREMENTS
RB	2	6.11.01	REVISED PER NOTES
RRB	4	6.26.01	REMOVE NCTL NOTE
RRB	5	7.19.01	ENLARGE TEXT

Hendee Enterprises, Inc.
The Innovative Solutions Company
P.O.Box 4289, Houston, TX 77210-4289 9350 South Point Dr., Houston, TX 77054
(713) 796-2322 Fax (713) 796-0494 (800) 231-7275 (Nat'l) (800) 323-3641 (Texas)

TITLE: FORCE 12
PANEL MOUNTING CROSS SECTIONS

CLIENT: VARIES
LOCATION: VARIES

DRAWN BY: RB | SCALE: NTS | SHEET 4 OF 9
DATE: 05/03/00 | DOCUMENT NO: F1201_4 | REV: 5

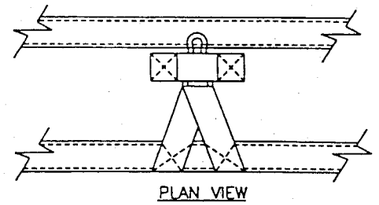

PLAN VIEW

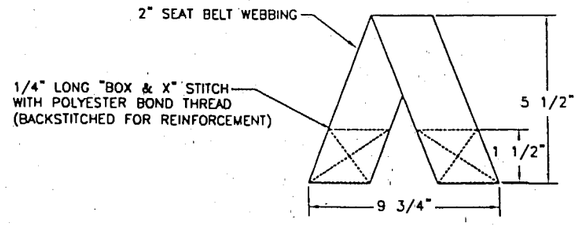

HANGER LOOP DETAIL

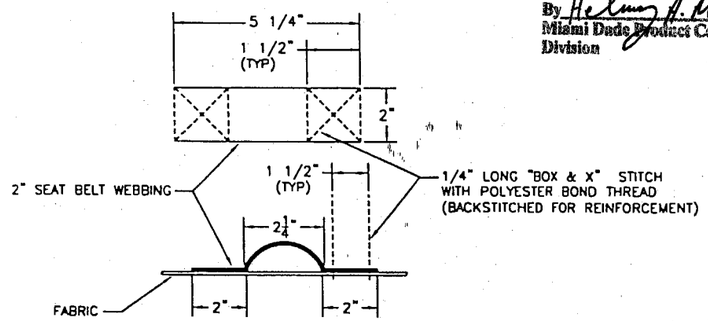

REINFORCING LOOP DETAIL

SCREEN ATTACHMENT LOOP DETAIL AT THE TOP OF SCREEN

PRODUCT RENEWED
as complying with the Florida
Building Code
Acceptance No. 04-0413.04
Expiration Date 08/29/2009
By Helmy A. Mahler
Miami Dade Product Control
Division

PRODUCT REVISED
as complying with the Florida
Building Code
Acceptance No. 07-0419.02
Expiration Date August 29, 2009
By
Miami Dade Product Control
Division

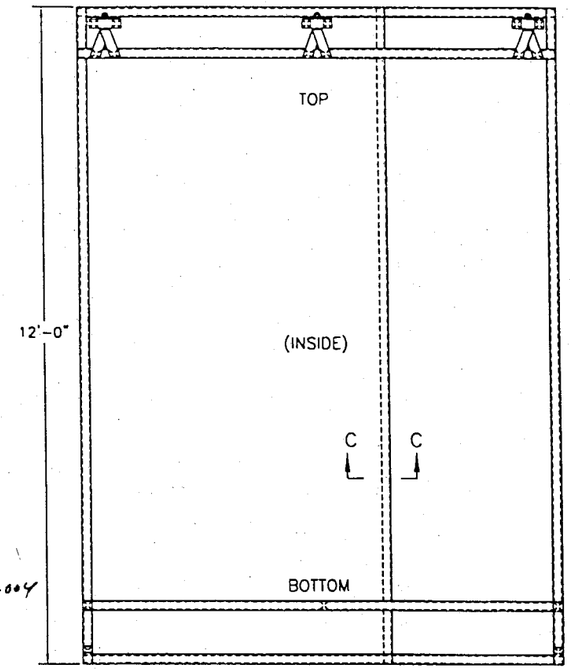

HURRICANE SCREEN ELEVATION

(INSIDE STITCHING DETAILS. THE SCREEN IS MANUFACTURED IN (3) STYLES; VERTICAL SEAM, HORIZONTAL SEAM, & NON-SEAMED OVERLAPPED FABRIC PANELS)

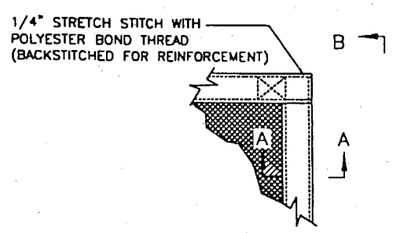

PLAN VIEW

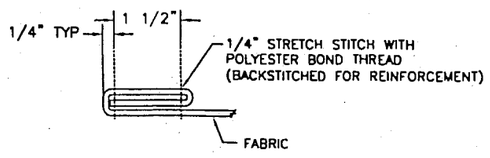

SECTION A

(DOUBLE HEM)

TYPICAL ON ALL PANEL EDGES

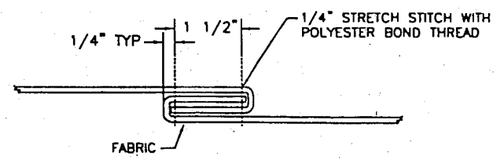

SECTION C

(HOOK SEAM DETAIL – VERTICAL OR HORIZONTAL)

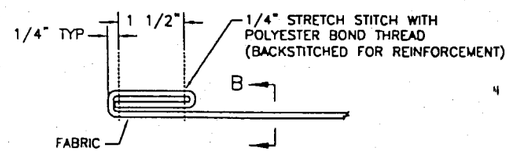

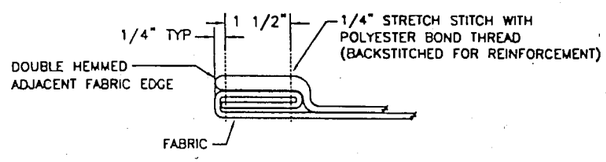

SECTION B

(CORNER HEM DETAIL)

APPROVED AS COMPLYING WITH THE
SOUTH FLORIDA BUILDING CODE
DATE 08/29/2001
BY Helmy A. Mahler
PRODUCT CONTROL DIVISION
BUILDING CODE COMPLIANCE OFFICE
ACCEPTANCE NO. 00-0929.12

R.R. Bullard, P.E.
07/19/01

ROBERT R. BULLARD, P.E. 18544
ABSOLUTE ENGINEERING GROUP CA-7895
140 SOUTH BEACH ST. #400
DAYTONA BEACH, FL 32114
PHONE: 386-254-2909
FAX: 386-255-9419

REVISIONS

BY:	LTR.	DATE	DESCRIPTION
RB	0	3.14.01	ADDITIONAL PERMIT
			DRAWINGS
LS	1	4.24.01	REVISED PER CITY
			REQUIREMENTS
RRB	4	06.26.01	REMOVE NCTL NOTE

Hendee Enterprises, Inc.
The Innovative Solutions Company
P.O.Box 4289, Houston, TX 77210-4289 9350 South Point Dr., Houston, TX 77054
(713) 796-2322 Fax (713) 796-0494 (800) 231-7275 (Nat'l) (800) 323-3641 (Texas)

TITLE: FORCE 12
PANEL MOUNTING CROSS SECTIONS

CLIENT: VARIES
LOCATION: VARIES

DRAWN BY: RB	SCALE: NTS	SHEET 5 OF 9
DATE: 05/03/00	DOCUMENT NO: F1201_5	REV: 5

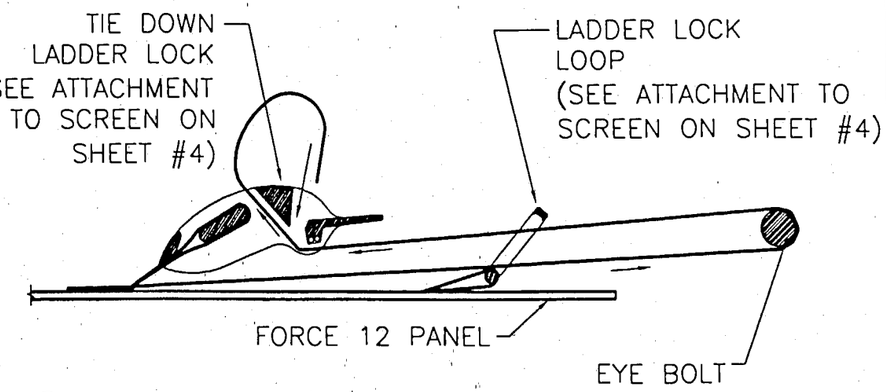

2 D1 STRAP PATH – THROUGH BUCKLE
SCALE: N.T.S. =1'-0"

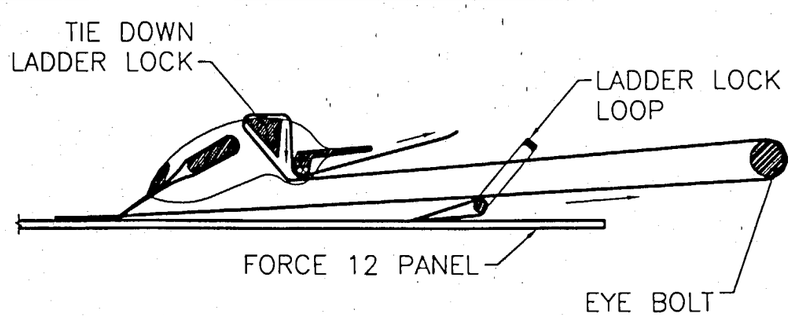

3 D1 STRAP PATH – TIGHTEN
SCALE: NTS =1'-0"

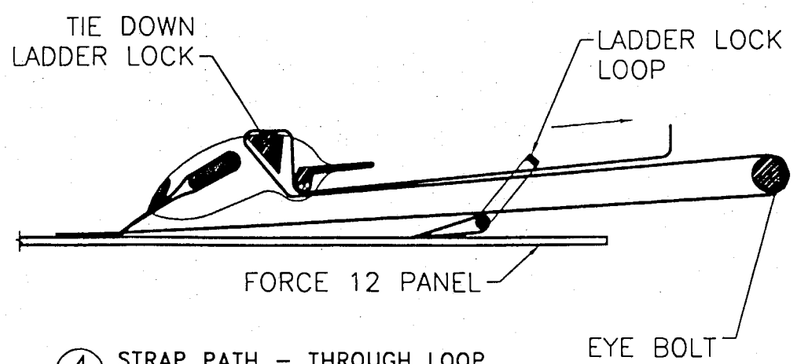

4 D1 STRAP PATH – THROUGH LOOP
SCALE: NTS =1'-0"

SCREEN ATTACHMENT STRAP DETAIL
AT THE BOTTOM OF SCREEN

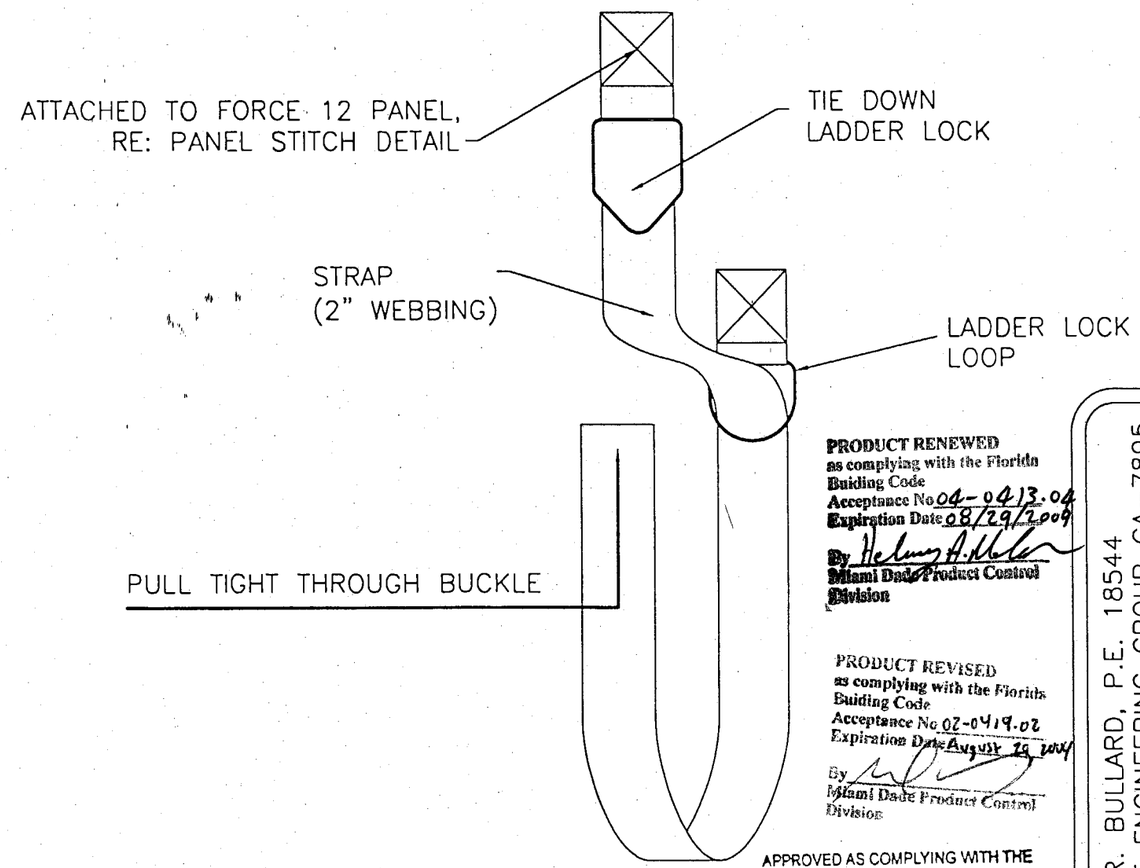

1 D1 PANEL ATTACHMENT – STRAP
SCALE: NTS =1'-0"

PRODUCT RENEWED
as complying with the Florida
Buiding Code
Acceptance No 04-0413.04
Expiration Date 08/29/2009
By
Miami Dade Product Control
Division

PRODUCT REVISED
as complying with the Florida
Buiding Code
Acceptance No 02-0419.02
Expiration Date August 19 2004
By
Miami Dade Product Control
Division

APPROVED AS COMPLYING WITH THE
SOUTH FLORIDA BUILDING CODE
DATE 08/29/2001
BY
PRODUCT CONTROL DIVISION
BUILDING CODE COMPLIANCE OFFICE
ACCEPTANCE NO. 00-0929.12

RBullard P.E.
07/19/01

ROBERT R. BULLARD, P.E. 18544
ABSOLUTE ENGINEERING GROUP CA-7895
140 SOUTH BEACH ST. #400
DAYTONA BEACH, FL 32114
PHONE: 386-254-2909
FAX: 386-255-9419

REVISIONS

BY:	LTR.	DATE	DESCRIPTION
RB	0	3.14.01	ADDITIONAL PERMIT DRAWINGS
LS	1	4.24.01	REVISED PER CITY REQUIREMENTS
RRB	4	6.26.01	REMOVE NCTL NOTE

Hendee Enterprises, Inc.
The Innovative Solutions Company
P.O.Box 4289, Houston, TX 77210-4289 9350 South Point Dr., Houston, TX 77054
(713) 796-2322 Fax (713) 796-0494 (800) 231-7275 (Nat'l) (800) 323-3641 (Texas)

TITLE: *FORCE 12*
PANEL MOUNTING CROSS SECTIONS

CLIENT: *VARIES*
LOCATION: *VARIES*

DRAWN BY: *RB* | SCALE: *NTS* | SHEET 6 OF 9
DATE: *05/03/00* | DOCUMENT NO: F1201_6 | REV: 5

NOTES:
1. ITEMS #14 & 15 ARE USED WHEN MOUNTING SCREEN BOTTOM TO CONCRETE.

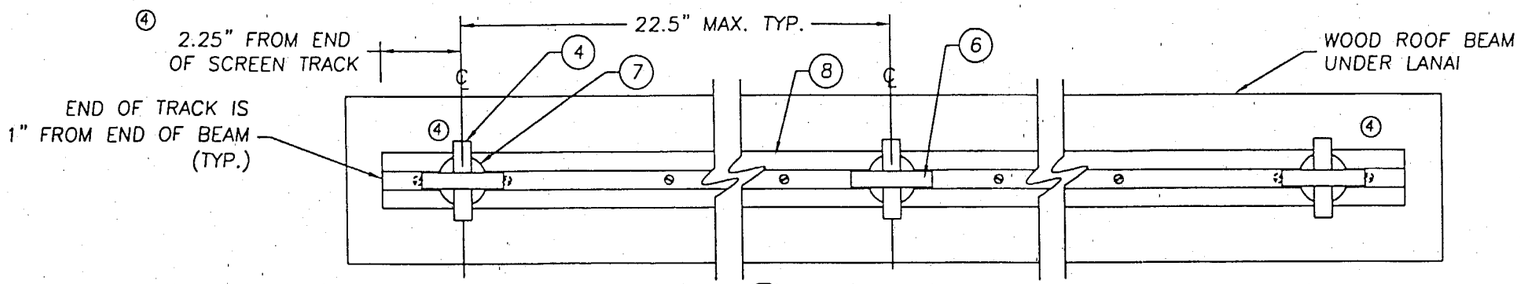

1/7 PLAN VIEW (LOOKING UP)
TOP VERTICAL MOUNTING IN WOOD
SEE SECTION 1/3 SHT. 3 & DETAIL "A" SHEET 8

PRODUCT RENEWED
as complying with the Florida Building Code
Acceptance No 04-0413.04
Expiration Date 08/29/2009
By Helmy A. Abler
Miami Dade Product Control Division

APPROVED AS COMPLYING WITH THE SOUTH FLORIDA BUILDING CODE
DATE 08/29/2001
BY Helmy A. Abler
PRODUCT CONTROL DIVISION
BUILDING CODE COMPLIANCE OFFICE
ACCEPTANCE NO. 00-0929.12

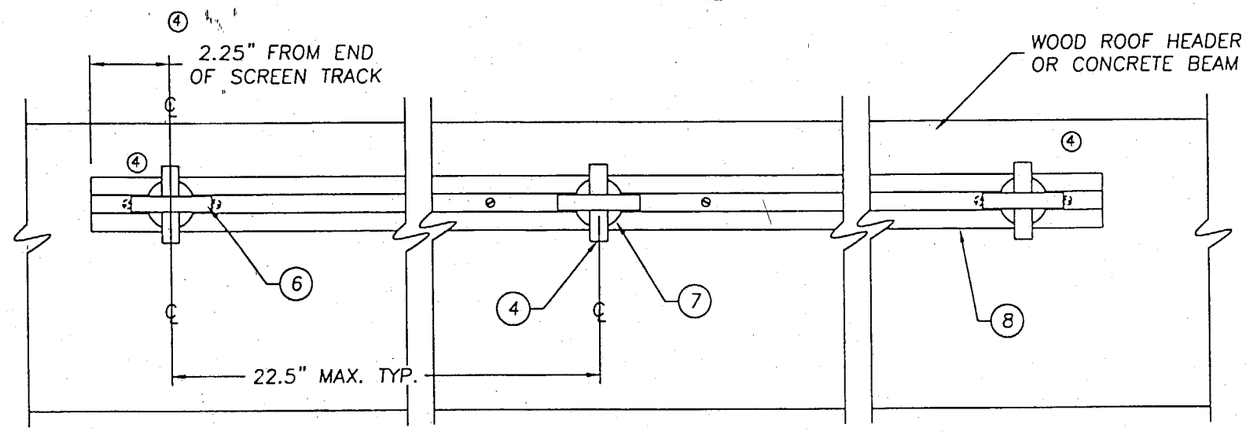

2/7 ELEVATION AT
TOP ANGLED MOUNTING IN WOOD OR CONCRETE
SEE DETAILS "C" & "D" SHT. 8

Robert Bullard, P.E.
07/19/01

ROBERT R. BULLARD, P.E. 18544
ABSOLUTE ENGINEERING GROUP CA-7895
140 SOUTH BEACH ST. #400
DAYTONA BEACH, FL 32114
PHONE: 386-254-2909
FAX: 386-255-9419

PRODUCT REVISED
as complying with the Florida Building Code
Acceptance No 02-0419.02
Expiration Date August 25, 2004
By
Miami Dade Product Control Division

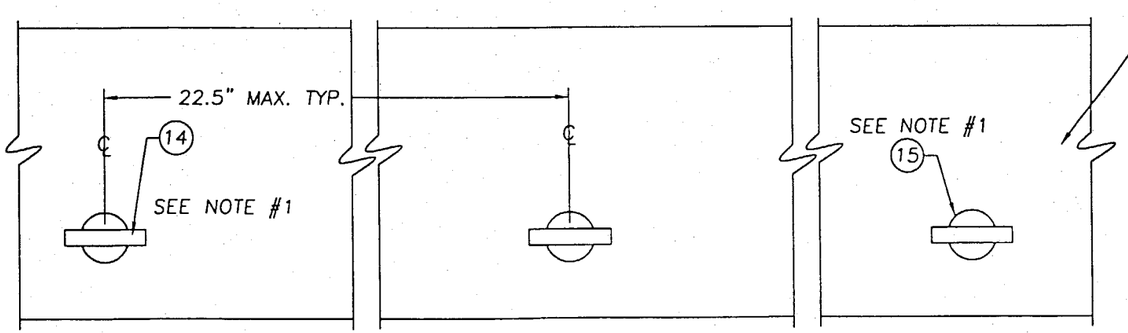

3/7 PLAN VIEW AT
BOTTOM MOUNTING IN CONCRETE
SEE SECTIONS 1/3, SHT. 3 & 4/2 SHT. 2 & DETAIL "B" SHT. 8

REVISIONS			
BY:	LTR.	DATE	DESCRIPTION
LS	1	4/24/01	REV. PER CITY REQUIREMENTS
RB	2	6/11/01	REVISIONS PER NOTES
RRB	④	6/26/01	REVISIONS PER NOTES

Hendee Enterprises, Inc.
The Innovative Solutions Company
P.O.Box 4289, Houston, TX 77210-4289 9350 South Point Dr., Houston, TX 77054
(713) 796-2322 Fax (713) 796-0494 (800) 231-7275 (Nat'l) (800) 323-3641 (Texas)

TITLE: FORCE 12
PANEL MOUNTING CROSS SECTIONS

CLIENT: VARIES
LOCATION: VARIES

DRAWN BY: RB	SCALE: NTS	SHEET 7 OF 9
DATE: 05/03/00	DOCUMENT NO: F1201_7	REV: 5

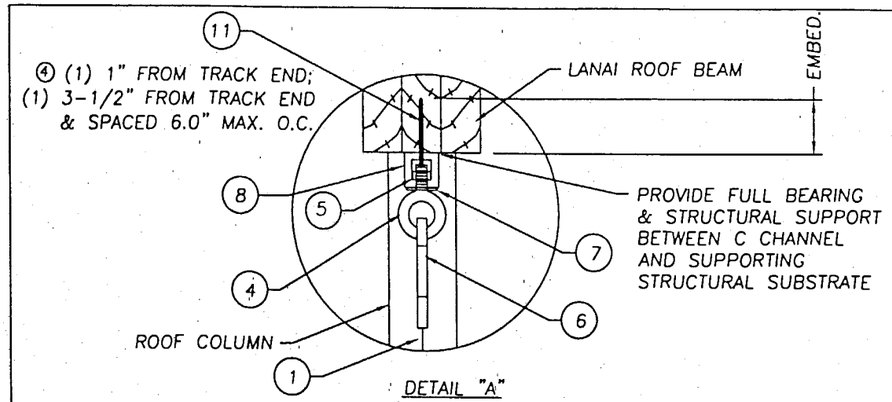

DETAIL "A"
TRACK TO WOOD VERTICAL MOUNT @ TOP
LAG SCREW IS INSTALLED VERTICALLY
(WITH 1-¾" MIN. EDGE DISTANCE TO VERTICAL FACE @ END OR SIDE OF ④ WOOD MEMBER; TYP. @ ALL WOOD)

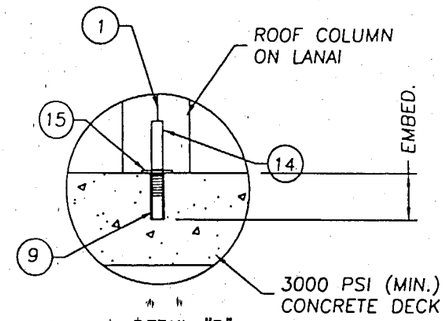

DETAIL "B"
SCREEN TO CONCRETE @ BOTTOM
DROP-IN ANCHOR IS INSTALLED VERTICALLY
(WITH 7.5" MIN. EDGE DISTANCE, INCL. CRACKS, OPENINGS AND CONTROL JOINTS)

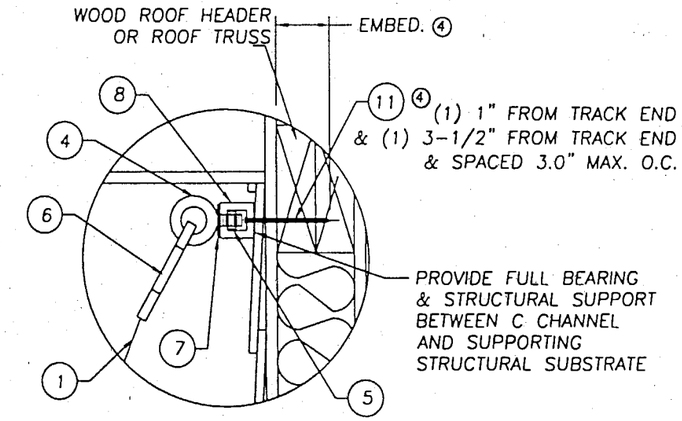

DETAIL "C"
TRACK TO WOOD ANGLED MOUNT @ TOP
LAG SCREW IS INSTALLED HORIZONTALLY
④ (WITH ¾" MIN. EDGE DISTANCE)

DETAIL E – NOT USED

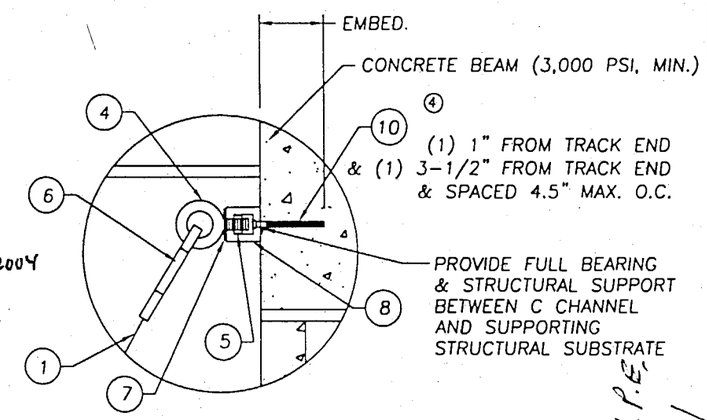

DETAIL "D"
TRACK TO CONCRETE BEAM ANGLE MOUNT @ TOP
TAP-CON ANCHOR IS INSTALLED
④ HORIZONTALLY (AS SHOWN) OR VERTICALLY (WITH 2.5" MIN. EDGE DISTANCE)

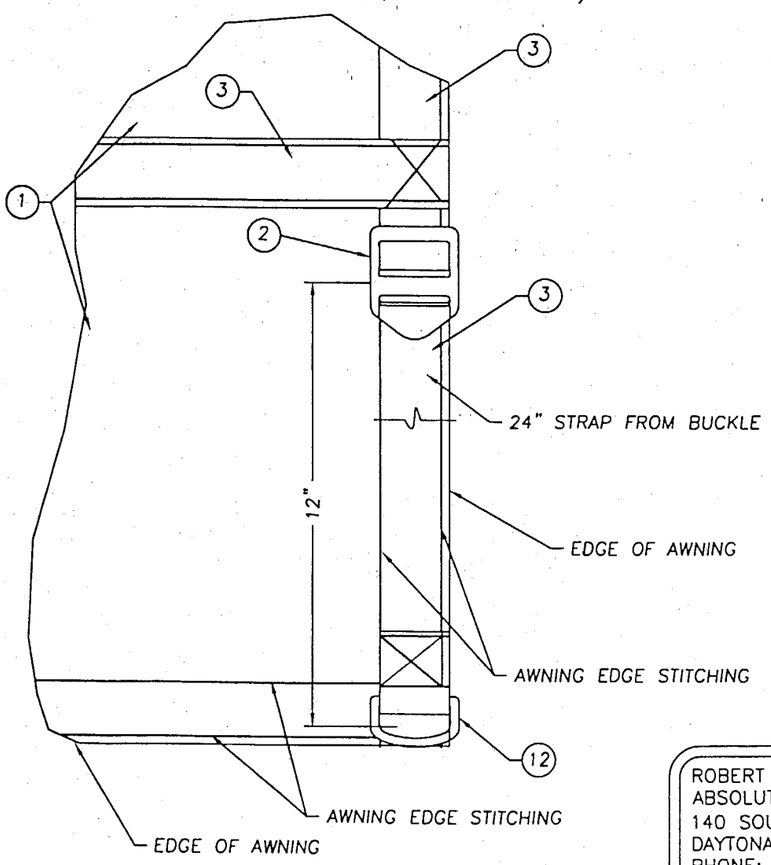

DETAIL "F" STITCHING DETAIL

PRODUCT RENEWED
as complying with the Florida
Building Code
Acceptance No. 04-0413.04
Expiration Date 08/29/2009
By Helmy A. Moker
Miami Dade Product Control
Division

PRODUCT REVISED
as complying with the Florida
Building Code
Acceptance No. 02-0419.02
Expiration Date AUGUST 29, 2004
By
Miami Dade Product Control
Division

APPROVED AS COMPLYING WITH THE
SOUTH FLORIDA BUILDING CODE
DATE 08/29/2001
BY Helmy A. Moker
PRODUCT CONTROL DIVISION
BUILDING CODE COMPLIANCE OFFICE
ACCEPTANCE NO. 00-0929.12

R.R. Bullard, P.E.
07/19/01

ROBERT R. BULLARD, P.E. 18544
ABSOLUTE ENGINEERING GROUP CA-7895
140 SOUTH BEACH ST. #400
DAYTONA BEACH, FL 32114
PHONE: 386-254-2909
FAX: 386-255-9419

REVISIONS

BY:	LTR.	DATE	DESCRIPTION
LS	1	4/24/01	REV. PER CITY REQUIREMENTS
RB	2	6/11/01	REVISIONS PER NOTES
RRB	④	6/26/01	REVISIONS PER NOTES

Hendee Enterprises, Inc.
The Innovative Solutions Company
P.O.Box 4289, Houston, TX 77210-4289 9350 South Point Dr., Houston, TX 77054
(713) 796-2322 Fax (713) 796-0494 (800) 231-7275 (Nat'l) (800) 323-3641 (Texas)

TITLE: FORCE 12
PANEL MOUNTING CROSS SECTIONS

CLIENT: VARIES
LOCATION: VARIES

DRAWN BY: RB | SCALE: NTS | SHEET 8 OF 9
DATE: 05/03/00 | DOCUMENT NO: F1201_8 | REV: 5

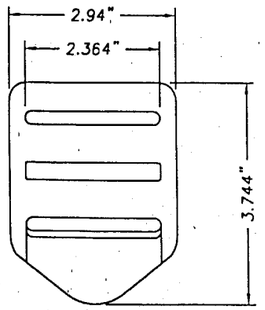

(2) .22" THK. ACETAL HOSTAFORM C
TIE DOWN LADDERLOC ACETAL HOSTAFORM C

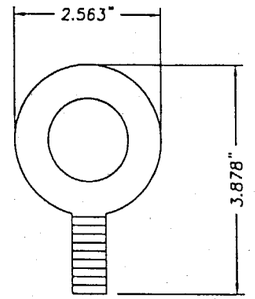

(4) 1/2" EYEBOLT
GALVANIZED STEEL 1/2" THK. BAR

Item	DESCRIPTION	Material
1	HURRICANE SCREEN (SEE SCREEN CONSTRUCTION SHT. 1)	POLYPROP.
2	TIE DOWN LADDERLOC (ITW NEXUS, ACETAL HOSTAFORM C)	ACETAL
3	STRAP	
4	1/2" EYEBOLT (CHICAGO #5)	GALV. STEEL
5	1/2" UNI-STRUT NUT (STAINLESS STEEL, W/OUT SPRING)	S STEEL
6	3/4" SPRING SNAP (CAMMBELL, #B7645068)	S STEEL
7	1/2" FLAT WASHER (.108" THK. STEEL)	STEEL
8	EXTRUDED ALUM. SCREEN TRACK (.325" WALL, 6063-T6)	ALUM.
9	5/8" DROP-IN ANCHOR (BY POWERS RAWL)	S STEEL
10	TAPCON 1/4" x 3 1/4" LG. (ELCO) W/ 1 3/4" (MIN. EMBEDMENT)	STEEL
11	1/4"x3" LG. SLOTTED PANHEAD SCREW (W/ 2" MIN. THREADED EMBED.)	S STEEL
12	LADDERLOC LOOP (ITW NEXUS, ACETAL HOSTAFORM C)	ACETAL
13	LEFT BLANK	–
14	5/8" EYEBOLT (CHICAGO #7)	GALV. STEEL
15	5/8" FLAT WASHER (.108" THK. STEEL)	STEEL

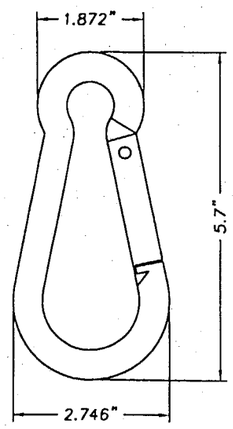

(6) 3/4" SPRING SNAP
.434" THK. STAINLESS STEEL BAR

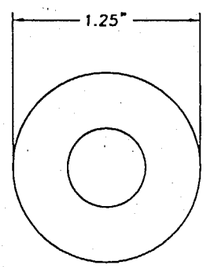

(7) 1/2" FLAT WASHER
.108" THK. STEEL

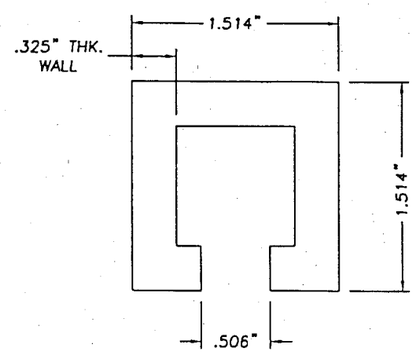

(8) EXTRUDED ALUMINUM SCREEN TRACK
.325" THK. 6063-T6 ALUMINUM

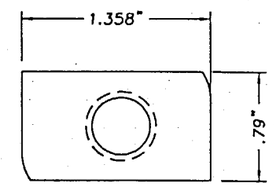

(5) 1/2" UNI-STRUT NUT W/OUT SPRING
.364" THK. STAINLESS STEEL

PRODUCT REVISED
as complying with the Florida
Building Code
Acceptance No. 02-0119.02
Expiration Date August 24, 2004
By
Miami Dade Product Control
Division

ROBERT R. BULLARD, P.E. 18544
ABSOLUTE ENGINEERING GROUP CA-7895
140 SOUTH BEACH ST. #400
DAYTONA BEACH, FL 32114
PHONE: 386-254-2909
FAX: 386-255-9419

PRODUCT RENEWED
as complying with the Florida
Building Code
Acceptance No 04-0413.04
Expiration Date 08/29/2009
By Helmy A. Mahler
Miami Dade Product Control
Division

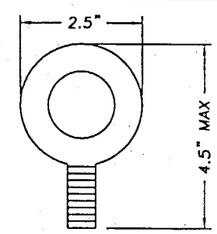

(14) 5/8" EYEBOLT
GALVANIZED STEEL 5/8" THK. BAR

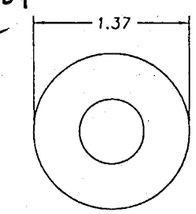

(15) 5/8" FLAT WASHER
.108" THK. STEEL

RRBullard, P.E.
07/19/01

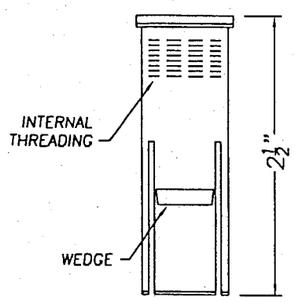

(9) 5/8" DROP-IN ANCHOR
STAINLESS STEEL

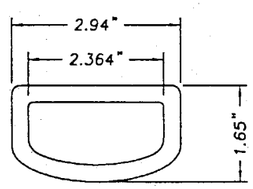

(12) LADDERLOC LOOP
.161" THK. ACETAL HOSTAFORM C

(13) – NOT USED

APPROVED AS COMPLYING WITH THE
SOUTH FLORIDA BUILDING CODE
DATE 08/29/2001
BY Helmy A. Mahler
PRODUCT CONTROL DIVISION
BUILDING CODE COMPLIANCE OFFICE
ACCEPTANCE NO. 00-0929.12

PER NCTL-210-2310-1,2,3
(TYPICAL 9 OF 9)

REVISIONS

BY:	LTR.	DATE	DESCRIPTION
LS	1	4/24/01	REV. PER CITY REQUIREMENTS
RB	2	6/11/01	REVISIONS PER NOTES
RRB	4	6/26/01	REVISIONS PER NOTES

Hendee Enterprises, Inc.
The Innovative Solutions Company
P.O.Box 4289, Houston, TX 77210-4289 9350 South Point Dr., Houston, TX 77054
(713) 796-2322 Fax (713) 796-0494 (800) 231-7275 (Nat'l) (800) 323-3641 (Texas)

TITLE: FORCE 12
PANEL MOUNTING CROSS SECTIONS

CLIENT: VARIES
LOCATION: VARIES

DRAWN BY: RB	SCALE: NTS	SHEET 9 OF 9
DATE: 05/03/00	DOCUMENT NO: F1201_9	REV: 5