MIAMI-DADE

BUILDING CODE COMPLIANCE OFFICE (BCCO)
PRODUCT CONTROL DIVISION

MIAMI-DADE COUNTY, FLORIDA
METRO-DADE FLAGLER BUILDING
140 WEST FLAGLER STREET, SUITE 1603
MIAMI, FLORIDA 33130-1563
(305) 375-2901 FAX (305) 375-2908

NOTICE OF ACCEPTANCE (NOA)

Santafe Tile Corporation
8825 NW 95th Street
Medley, FL 33178

SCOPE:

This NOA is being issued under the applicable rules and regulations governing the use of construction materials. The documentation submitted has been reviewed by the BCCO and accepted by the Building Code and Product Review Committee to be used in Miami Dade County and other areas where allowed by the Authority Having Jurisdiction (AHJ).

This NOA shall not be valid after the expiration date stated below. The Miami-Dade County Product Control Division (In Miami Dade County) and/or the AHJ (in areas other than Miami Dade County) reserve the right to have this product or material tested for quality assurance purposes. If this product or material fails to perform in the accepted manner, the manufacturer will incur the expense of such testing and the AHJ may immediately revoke, modify, or suspend the use of such product or material within their jurisdiction. BORA reserves the right to revoke this acceptance, if it is determined by Miami-Dade County Product Control Division that this product or material fails to meet the requirements of the applicable building code.

This product is approved as described herein, and has been designed to comply with the Florida Building Code, including the High Velocity Hurricane Zone.

DESCRIPTION: Santafe Spanish 'S' Clay Roof Tile

LABELING: Each unit shall bear a permanent label with the manufacturer's name or logo, city, state and following statement: "Miami-Dade County Product Control Approved", unless otherwise noted herein.

RENEWAL of this NOA shall be considered after a renewal application has been filed and there has been no change in the applicable building code negatively affecting the performance of this product.

TERMINATION of this NOA will occur after the expiration date or if there has been a revision or change in the materials, use, and/or manufacture of the product or process. Misuse of this NOA as an endorsement of any product, for sales, advertising or any other purposes shall automatically terminate this NOA. Failure to comply with any section of this NOA shall be cause for termination and removal of NOA.

ADVERTISEMENT: The NOA number preceded by the words Miami-Dade County, Florida, and followed by the expiration date may be displayed in advertising literature. If any portion of the NOA is displayed, then it shall be done in its entirety.

INSPECTION: A copy of this entire NOA shall be provided to the user by the manufacturer or its distributors and shall be available for inspection at the job site at the request of the Building Official.

This NOA revises NOA # 03-1125.03 and consists of pages 1 through 5.
The submitted documentation was reviewed by Frank Zuloaga, RRC

PRODUCT CONTROL ACCEPTED

ROOFING ASSEMBLY APPROVAL

Category: Roofing
Sub-Category: 07320 Roofing Tiles

Material: Clay
Deck Type: Wood

1. SCOPE

This revises a roofing system using Santa Fe "Santafe 'S" Clay Roof Tile, as manufactured Santafe Tile Corporation and described in Section 2 of this Notice of Acceptance. For locations where the pressure requirements, as determined by applicable Building Code does not exceed the design pressure values obtained by calculations in compliance with RAS 127 using the values listed in section 4 herein. The attachment calculations shall be done as a moment based system.

2. PRODUCT DESCRIPTION

Manufactured by Applicant	Dimensions	Test Specifications	Product Description
Santafé 'S' Clay Roof Tile	N/A	TAS 112	One piece high profile clay roof tile equipped with two nail holes. For nail-on, mortar set and adhesive set applications.
Trim Pieces	l = varies w = varies varying thickness	TAS 112	Accessory trim, clay roof pieces for use at hips, rakes, ridges and valley terminations. Manufactured for each tile profile.

2.1 SUBMITTED EVIDENCE:

Test Agency	Test Identifier	Test Name/Report	Date
The Center for Applied Engineering, Inc.	94-156-8 94-156-9	TAS 101 TAS 102	Aug. 1994
The Center for Applied Engineering, Inc.	25-7205-1	TAS 101	March 1995
The Center for Applied Engineering, Inc.	Project: 07-07-00-91 (307023)	TAS 100	Sept. 1994
Redland Technologies	7161-03 Appendix II	TAS 108 (Nail-On)	Dec. 1991
Redland Technologies	7161-03 Appendix III	Static Uplift Testing TAS 102 & TAS 102(A)	Dec. 1991
Redland Technologies	P 0402	Withdrawal Resistance Testing of Screw vs smooth shank nails	Sept. 1993

Test Agency	Test Identifier	Test Name/Report	Date
Redland Technologies	P 0647-01	TAS 108 (Mortar Set)	Aug. 1994
Redland Technologies	P 0631-01	PA 108 (Mortar Set)	July. 1994
Celotex Corporation Testing Services	520305-01 thru 05	PA 102	June 1999
IBA Consultants, Inc.	2353-4	Restoring Moment	Aug. 1999
PRI Asphalt Technologies, Inc.	SFTC-003-02-01	TAS 101	12/06/02
IBA Consultants, Inc.	2353-70	TAS 101	09/22/03
IBA Consultants, Inc.	2353-71	TAS 101	09/22/03

3. LIMITATIONS

3.1 Fire classification is not part of this acceptance.

3.2 For mortar or adhesive set tile applications, a static field uplift test shall be performed in accordance with RAS 106.

3.3 Applicant shall retain the services of a Miami-Dade County Certified Laboratory to perform quarterly test in accordance with TAS 112, appendix 'A'. Such testing shall be submitted to the Building Code Compliance Office for review.

3.4 Minimum underlayment shall be in compliance with the applicable Roofing Applications Standards listed section 4.1 herein.

3.5 30/90 hot mopped underlayment applications may be installed perpendicular to the roof slope unless stated otherwise by the underlayment material manufacturers published literature.

3.6 This acceptance is for wood deck applications. Minimum deck requirements shall be in compliance with applicable building code.

4. INSTALLATION

4.1 Santafe 'S' and its components shall be installed in strict compliance with Roofing Application Standard RAS 118, RAS 119 and RAS 120.

4.2 Data For Attachment Calculations

Table 1: Average Weight (W) and Dimensions (l x w)

Tile Profile	Weight-W (lbf)	Length-l (ft)	Width-w (ft)
Santafe 'S'	6.7	1.5	0.958

Table 2: Aerodynamic Multiplyers– $\lambda(ft^3)$

Tile Profile	λ (ft^3) Batten Application	λ (ft^3) Direct Deck
Santafe 'S'	0.274	0.297

Table 3: Restoring Moments due to Gravity - M_g (ft-lbf)												
Tile Profile	2":12"		3":12"		4":12"		5":12"		6":12"		7":12" or greater	
	Battens	Direct Deck	Battens	Direct Deck	Battens	Direct Deck	Battens	Direct Deck	Battens	Direct Deck	Battens	Direct Deck
Santafe 'S'	5.93	5.90	5.85	5.82	5.73	5.69	5.56	5.53	5.32	5.29	5.03	N/A

Table 4: Attachment Resistance Expressed as a Moment - M_f (ft-lbf) for Nail-On Systems			
Tile Profile	Fastener Type	Direct Deck	Battens
Santafe 'S'	2-12d Ring Shank Nails	21.8	N/A
	One #8 Screw	29.16[1]	N/A
	Two #8 Screws	38.28[1]	N/A
	One #8 Screw w/ Clip	57.31[1]	N/A
	Two #8 Screws w/ Clip	57.60[1]	61.77[1]

1. Approved screws as noted 'Product manufactured by others'.

Table 5: Attachment Resistance Expressed as a Moment M_f (ft-lbf) for Two Patty Adhesive Set Systems		
Tile Profile	Tile Application	Minimum Attachment Resistance
Santafe 'S'	Tile Bond	38.9[3]
	Polyfoam Polypro AH 160™	28.5[4]

2 See manufactures component approval for installation requirements.
3 Flexible Product, Inc. Average weight per patty 10.4 grams.
4 Polyfoam Product, Inc. Average weight per patty 9.4 grams.

Table 5A: Attachment Resistance Expressed as a Moment - M_f (ft-lbf) for Single Patty Adhesive Set Systems		
Tile Profile	Tile Application	Minimum Attachment Resistance
Santafe 'S'	Polyfoam Polypro AH 160™	63.8[5]
	Polyfoam Polypro AH 160™	61.9[6]

5 Paddy placement of 63 grams of Polypro AH 160™.
6 Paddy placement of 24 grams of Polypro AH 160™.

Table 6: Attachment Resistance Expressed as a Moment - M_f (ft-lbf) for Mortar or Adhesive Set Systems		
Tile Profile	Tile Application	Attachment Resistance
Santafe 'S'	Mortar Set	23.6

5. LABELING

5.1 All tiles shall bear the imprint or identifiable marking of the manufacturer's name or logo, or following statement: "Miami-Dade County Product Control Approved".

6. BUILDING PERMIT REQUIREMENTS

6.1 Application for building permit shall be accompanied by copies of the following:

6.1.1 This Notice of Acceptance.

6.1.2 Any other documents required by the Building Official or applicable building code in order to properly evaluate the installation of this system.

PROFILE DRAWING

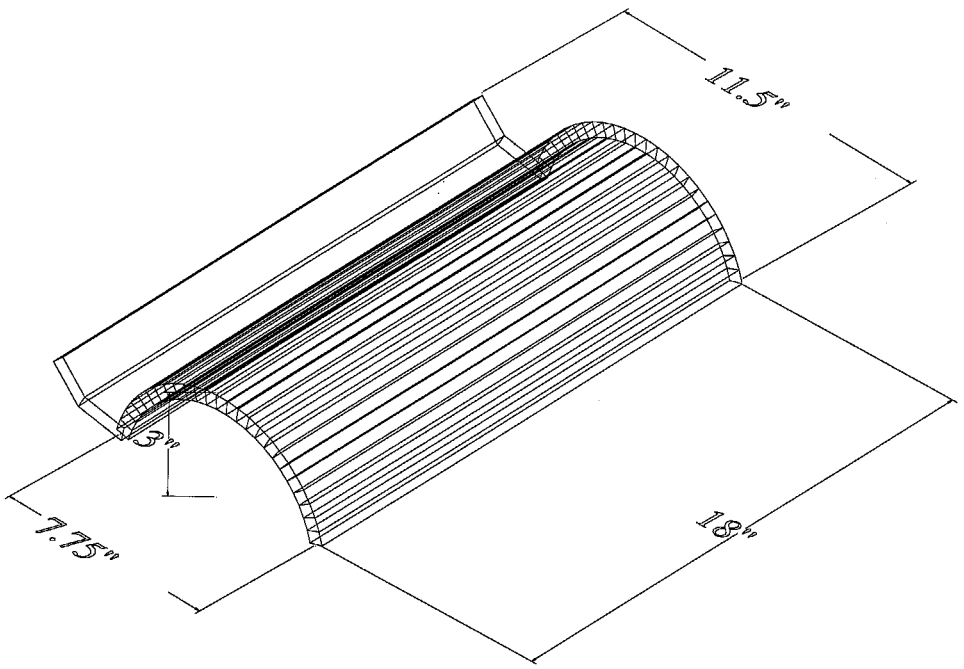

"SANTAFÉ S" CLAY ROOF TILE

END OF THIS ACCEPTANCE