MIAMI-DADE COUNTY

BUILDING CODE COMPLIANCE OFFICE (BCCO)
PRODUCT CONTROL DIVISION

MIAMI-DADE COUNTY, FLORIDA
METRO-DADE FLAGLER BUILDING
140 WEST FLAGLER STREET, SUITE 1603
MIAMI, FLORIDA 33130-1563
(305) 375-2901 FAX (305) 375-2908

NOTICE OF ACCEPTANCE (NOA)

Traco Security Windows & Doors, Inc.
5100 NW 72nd Avenue
Miami, Fl 33166

SCOPE:

This NOA is being issued under the applicable rules and regulations governing the use of construction materials. The documentation submitted has been reviewed by Miami-Dade County Product Control Division and accepted by the Board of Rules and Appeals (BORA) to be used in Miami Dade County and other areas where allowed by the Authority Having Jurisdiction (AHJ).

This NOA shall not be valid after the expiration date stated below. The Miami-Dade County Product Control Division (In Miami Dade County) and/or the AHJ (in areas other than Miami Dade County) reserve the right to have this product or material tested for quality assurance purposes. If this product or material fails to perform in the accepted manner, the manufacturer will incur the expense of such testing and the AHJ may immediately revoke, modify, or suspend the use of such product or material within their jurisdiction. BORA reserves the right to revoke this acceptance, if it is determined by Miami-Dade County Product Control Division that this product or material fails to meet the requirements of the applicable building code.

This product is approved as described herein, and has been designed to comply with the Florida Building Code, including the High Velocity Hurricane Zone.

DESCRIPTION: Series 2100 Aluminum Single Hung Window

APPROVAL DOCUMENT: Drawing No. **04-113-0002**, titled "Series 2100 Alum. Single Hung-Window Non-Impact Resistant", sheets 1 through 4 of 4, dated 08/19/04 with revision dated 10/6/04, prepared Frank L. Bennardo, P.E., Inc., Consulting Engineers, signed and sealed by Frank L. Bennardo, P.E., bearing the Miami-Dade County Product Control Revision stamp with the Notice of Acceptance number and expiration date by the Miami-Dade County Product Control Division.

MISSILE IMPACT RATING: None

LABELING: Each unit shall bear a permanent label with the manufacturer's name or logo, city, state and following statement: "Miami-Dade County Product Control Approved", unless otherwise noted herein.

RENEWAL of this NOA shall be considered after a renewal application has been filed and there has been no change in the applicable building code negatively affecting the performance of this product.

TERMINATION of this NOA will occur after the expiration date or if there has been a revision or change in the materials, use, and/or manufacture of the product or process. Misuse of this NOA as an endorsement of any product, for sales, advertising or any other purposes shall automatically terminate this NOA. Failure to comply with any section of this NOA shall be cause for termination and removal of NOA.

ADVERTISEMENT: The NOA number preceded by the words Miami-Dade County, Florida, and followed by the expiration date may be displayed in advertising literature. If any portion of the NOA is displayed, then it shall be done in its entirety.

INSPECTION: A copy of this entire NOA shall be provided to the user by the manufacturer or its distributors and shall be available for inspection at the job site at the request of the Building Official.

This NOA revises **NOA # 02-0612.04** consists of this page 1 and evidence pages E-1 and E-2, as well as approval document mentioned above.

The submitted documentation was reviewed by **Manuel Perez P.E.**

PRODUCT CONTROL ACCEPTED

Traco Security Windows & Doors, Inc.

NOTICE OF ACCEPTANCE: EVIDENCE SUBMITTED

A. DRAWINGS

1. Manufacturer's die drawings and sections.
2. Drawing No. **04-113-0002**, titled "Series 2100 Alum. Single Hung Window Non-Impact Resistant", sheets 1 through 4 of 4, dated 08/19/04 with revision dated 10/6/04, prepared by Frank L. Bennardo, Inc. Consulting Engineers, signed and sealed by Frank L. Bennardo, P.E.

B. TESTS

1. Test reports on 1) Air Infiltration Test, per FBC, TAS 202-94
   2) Uniform Static Air Pressure Test, Loading per FBC, TAS 202-94
   3) Water Resistance Test, per FBC, TAS 202-94
   4) Forced Entry Test, per FBC 2411.3.2.1 (b) and TAS 202-94

   along with marked-up drawings and installation diagram of Series 2100 Aluminum Single Hung Window, prepared by Fenestration Testing Laboratory, Test Report No. **FTL-1274**, dated 09/27/95, signed and sealed by Yamil Gerardo Kuri, P.E.
   "Submitted under NOA# 02-0612.04"
2. Test reports on 1) Air Infiltration Test, per FBC, TAS 202-94
   2) Uniform Static Air Pressure Test, Loading per FBC, TAS 202-94
   3) Water Resistance Test, per FBC, TAS 202-94
   4) Forced Entry Test, per FBC 2411.3.2.1 (b) and TAS 202-94

   along with marked-up drawings and installation diagram of Series 2100 Aluminum Single Hung Window, prepared by Fenestration Testing Laboratory, Test Report No. **FTL-1305**, dated 10/09/95, signed and sealed by Gilbert Diamond, P.E.
   "Submitted under NOA# 02-0612.04"
3. Test reports on 1) Uniform Static Air Pressure Test, Loading per FBC, TAS 202-94 along with marked-up drawings and installation diagram of Series 2100 Aluminum Single Hung Window, prepared by Fenestration Testing Laboratory, Test Report No. **FTL-1616**, dated 04/02/97, signed and sealed by Gilbert Diamond, P.E.
   "Submitted under NOA# 02-0612.04"
4. Test reports on 1) Air Infiltration Test, per FBC, TAS 202-94
   2) Uniform Static Air Pressure Test, Loading per FBC, TAS 202-94
   3) Water Resistance Test, per FBC, TAS 202-94

   along with marked-up drawings and installation diagram of Series 2100 Aluminum Single Hung Window, prepared by Farabaugh Engineering and Testing, Inc., Test Report No. **FET-04002**, dated 03/15/04, signed and sealed by Daniel G. Farabaugh, P.E.

Manuel Perez, P.E
Product Control Examiner
NOA No 04-0504.05
Expiration Date: July 11, 2007
Approval Date: November 18, 2004

NOTICE OF ACCEPTANCE: EVIDENCE SUBMITTED

C. CALCULATIONS

1. Anchor Calculations and structural analysis, prepared by Al Farooq Corporation., dated 6/8/02, signed and sealed by Humayoun Farooq, P.E. ***"Submitted under NOA# 02-0612.04"***
2. Anchor Calculation, ASTM- E1300, and structural analysis, prepared by Frank L. Bennardo, P.E., INC. Consulting Engineers, dated April 15, 2004 and revised on August 19,2004, signed and sealed by Frank L. Bennardo.

D. QUALITY ASSURANCE

1. Miami Dade Building Code Compliance Office (BCCO).

E. MATERIAL CERTIFICATIONS

2. None

F. STATEMENTS

1. Statement letter of conformance, dated July 7, 1999, signed and sealed by H. Farooq, P.E. ***"Submitted under NOA# 02-0612.04"***
2. Statement letter of no financial interest July 7, 1999, signed and sealed by H. Farooq, P.E. ***"Submitted under NOA# 02-0612.04"***
3. Letter stating that the product has not changed since it was last approved, and that the product engineer is still in the engineering business, signed by Javier Garcia. ***"Submitted under NOA# 02-0612.04"***
4. Statement letter of conformance, dated April 30, 2004, signed and sealed by Frank L. Bennardo, P.E.
5. Statement letter of no financial interest April 30, 2004, signed and sealed by Frank L. Bennardo, P.E.

G. OTHER

1. Notice of Acceptance No. **02-0612.04**, issued to Traco Windows & Doors, for "Series 2100 Single Hung Window- Non Impact Resistant, approved on 07/18/02 and expiring 07/11/07.

Manuel Perez

Manuel Perez, P.E
Product Control Examiner
NOA No 04-0504.05
Expiration Date: July 11, 2007
Approval Date: November 18, 2004

SERIES 2100 SINGLE-HUNG WINDOW (NON-IMPACT RESISTANT)

WINDOW WIDTH (in)	WINDOW HEIGHT (in)	DSB Ann 3/16" TAPCONS Pos (psf)	DSB Ann 3/16" TAPCONS Neg (psf)	3/16" Ann 3/16" TAPCONS Pos (psf)	3/16" Ann 3/16" TAPCONS Neg (psf)	3/16" Temp 3/16" TAPCONS Pos (psf)	3/16" Temp 3/16" TAPCONS Neg (psf)	1/2" Insul 3/16" TAPCONS Pos (psf)	1/2" Insul 3/16" TAPCONS Neg (psf)	3/16" Ann 1/4" TAPCONS Pos (psf)	3/16" Ann 1/4" TAPCONS Neg (psf)	3/16" Temp 1/4" TAPCONS Pos (psf)	3/16" Temp 1/4" TAPCONS Neg (psf)	1/2" Insul 1/4" TAPCONS Pos (psf)	1/2" Insul 1/4" TAPCONS Neg (psf)
		3 Anchors / Jamb		3 Anchors / Jamb		3 Anchors / Jamb		3 Anchors / Jamb		3 Anchors / Jamb		3 Anchors / Jamb		3 Anchors / Jamb	
19.125	26.00	63.33	135.53	80.00	135.53	80.00	135.53	80.00	135.53	80.00	209.00	80.00	210.00	80.00	210.00
26.50		63.33	97.81	80.00	97.81	80.00	97.81	80.00	97.81	80.00	205.65	80.00	205.65	80.00	205.65
37.00		63.33	70.05	70.05	70.05	70.05	70.05	70.05	70.05	80.00	147.29	80.00	147.29	80.00	147.29
53.125		35.06	35.06	48.79	48.79	48.79	48.79	48.79	48.79	80.00	102.59	80.00	102.59	80.00	102.59
		4 Anchors / Jamb		4 Anchors / Jamb		4 Anchors / Jamb		4 Anchors / Jamb		3 Anchors / Jamb		3 Anchors / Jamb		3 Anchors / Jamb	
19.125	38.375	63.33	122.43	80.00	122.43	80.00	122.43	80.00	122.43	80.00	193.06	80.00	193.06	80.00	193.06
26.50		63.33	88.36	80.00	88.36	80.00	88.36	80.00	88.36	80.00	139.33	80.00	139.33	80.00	139.33
37.00		61.00	61.00	63.28	63.28	63.28	63.28	63.28	63.28	80.00	99.79	80.00	99.79	80.00	99.79
53.125		24.45	24.45	44.07	44.07	44.07	44.07	44.07	44.07	69.50	69.50	69.50	69.50	69.50	69.50
		4 Anchors / Jamb		5 Anchors / Jamb		5 Anchors / Jamb		5 Anchors / Jamb		5 Anchors / Jamb		5 Anchors / Jamb		5 Anchors / Jamb	
19.125	50.625	63.33	92.81	80.00	116.01	80.00	116.01	80.00	116.01	80.00	209.00	80.00	210.00	80.00	178.00
26.50		63.33	66.98	80.00	83.72	80.00	83.72	80.00	83.72	80.00	136.00	80.00	176.04	80.00	138.00
37.00		47.97	47.97	59.97	59.97	59.97	59.97	59.97	59.97	80.00	91.70	80.00	104.12	80.00	93.30
53.125		19.29	19.29	41.76	41.76	41.76	41.76	41.76	41.76	62.63	62.63	62.63	62.63	56.10	56.10
		5 Anchors / Jamb		5 Anchors / Jamb		5 Anchors / Jamb		5 Anchors / Jamb		5 Anchors / Jamb		5 Anchors / Jamb		5 Anchors / Jamb	
19.125	57.00	63.33	85.00	80.00	103.03	80.00	103.03	80.00	103.03	80.00	191.00	80.00	210.00	80.00	153.00
26.50		63.33	67.90	74.36	74.36	74.36	74.36	74.36	74.36	80.00	120.00	80.00	156.35	80.00	122.00
37.00				53.26	53.26	53.26	53.26	53.26	53.26	80.00	82.10	80.00	98.95	80.00	89.50
53.125				37.09	37.09	37.09	37.09	37.09	37.09	53.00	53.00	57.91	57.91	55.50	55.50
		5 Anchors / Jamb		6 Anchors / Jamb		6 Anchors / Jamb		6 Anchors / Jamb		5 Anchors / Jamb		5 Anchors / Jamb		5 Anchors / Jamb	
19.125	63.00	63.33	77.00	80.00	111.87	80.00	111.87	80.00	111.87	80.00	176.00	80.00	196.00	80.00	139.00
26.50		60.70	60.70	80.00	80.73	80.00	80.73	80.00	80.73	80.00	106.00	80.00	141.46	80.00	109.00
37.00				57.82	57.82	57.82	57.82	57.82	57.82	76.20	76.20	80.00	95.85	80.00	84.30
53.125				40.27	40.27	40.27	40.27	40.27	40.27	49.50	49.50	54.49	54.49	54.65	54.65
		6 Anchors / Jamb		6 Anchors / Jamb		6 Anchors / Jamb		6 Anchors / Jamb		6 Anchors / Jamb		6 Anchors / Jamb		6 Anchors / Jamb	
19.125	74.25	63.33	64.90	80.0	94.92	80.00	94.92	80.00	94.92	80.00	153.00	80.00	199.57	80.00	117.00
26.50				78.0	68.50	68.50	68.50	68.50	68.50	80.00	82.80	80.00	144.03	80.00	89.60
37.00				55.9	49.06	49.06	49.06	49.06	49.06	65.70	65.70	80.00	93.73	73.60	73.60
53.125				38.9	34.17	34.17	34.17	34.17	34.17	45.40	45.40	50.00	50.00	50.14	50.14

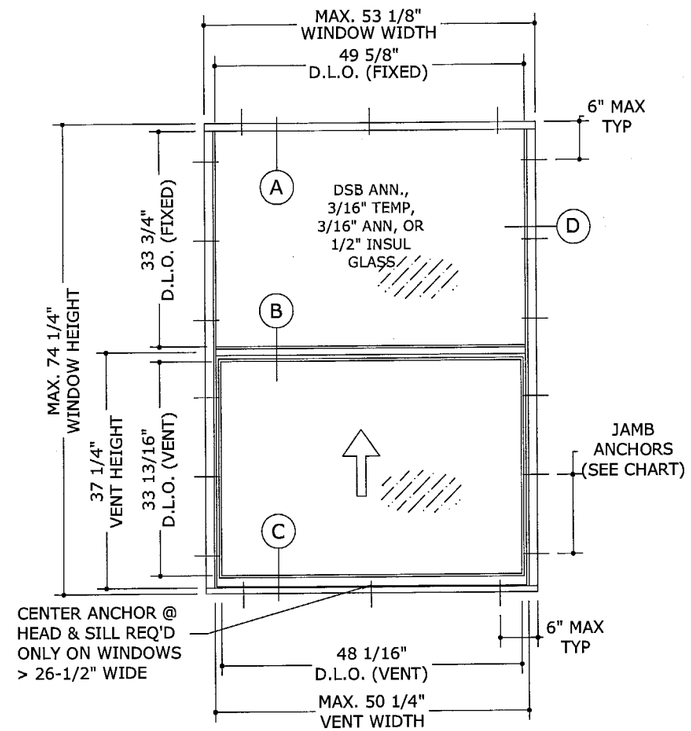

1/1 TYPICAL ELEVATION

1/2" = 1'-0" EXTERIOR ELEV

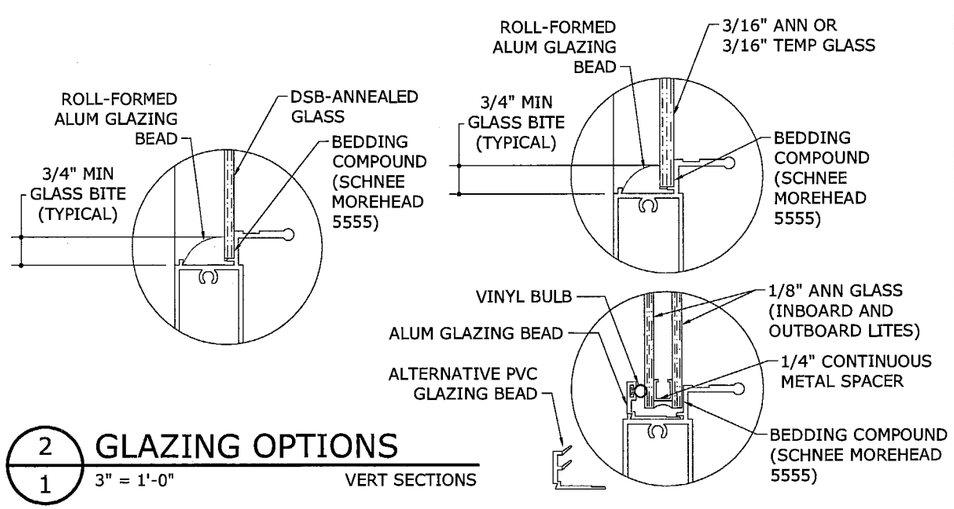

2/1 GLAZING OPTIONS

3" = 1'-0" VERT SECTIONS

GENERAL NOTES:

1) THE SYSTEM DESCRIBED HEREIN HAS BEEN DESIGNED AND TESTED IN COMPLIANCE WITH THE FLORIDA BUILDING CODE 2001 (HIGH VELOCITY HURRICANE ZONE) AND HVHZ TEST PROTOCOL TAS 202.
2) A 33-1/3% INCREASE IN ALLOWABLE STRESS HAS BEEN USED IN THE DESIGN OF THIS SYSTEM.
3) POSITIVE AND NEGATIVE DESIGN PRESSURES CALCULATED FOR USE WITH THIS SYSTEM SHALL BE DETERMINED BY OTHERS ON A JOB-SPECIFIC BASIS IN ACCORDANCE WITH THE GOVERNING CODE.
4) MULTIPLE WINDOW UNITS MUST BE INSTALLED USING MIAMI-DADE COUNTY BCCO-APPROVED STRUCTURAL MULLIONS (e.g. NOA #01-1218.01 OR #01-1218.02).
5) THE WINDOW SYSTEM DETAILED HEREIN IS GENERIC AND DOES NOT PROVIDE INFORMATION FOR A SPECIFIC SITE. FOR SITE CONDITIONS DIFFERENT FROM THE CONDITIONS DETAILED HEREIN, A LICENSED ENGINEER OR REGISTERED ARCHITECT SHALL PREPARE SITE SPECIFIC DOCUMENTS FOR USE IN CONJUNCTION WITH THIS DOCUMENT.
6) PERMIT HOLDER SHALL VERIFY THE ADEQUACY OF THE EXISTING STRUCTURE TO WITHSTAND SUPERIMPOSED LOADS.
7) ALL WINDOWS SHALL BE PROTECTED WITH MIAMI-DADE COUNTY APPROVED IMPACT RESISTANT SHUTTERS FOR ALL INSTALLATIONS.
8) ALL STEEL IN CONTACT WITH ALUMINUM SHALL BE PAINTED OR PLATED IN ACCORDANCE WITH THE 2001 FLORIDA BUILDING CODE.

PRODUCT REVISED
as complying with the Florida Building Code
Acceptance No 04-0504.05
Expiration Date July 11, 2007
By Manuel Perez
Miami-Dade Product Control Division

FRANK L. BENNARDO, P.E.
PE0046549
10/06/2004

FRANK L. BENNARDO, P.E., INC.
CONSULTING ENGINEERS
4441 NORTH DIXIE HIGHWAY
BOCA RATON, FL 33431
(561) 391-2888 FAX: (561) 391-2862
WWW.FLBENGINEERING.COM

TRACO
Windows & Doors Inc.
71 Progress Avenue
Cranberry Township, PA 16166
Tel: (724) 776-7000

SERIES 2100 ALUMINUM SINGLE-HUNG WINDOW
NON-IMPACT RESISTANT

REMARKS	DWN	CHKD	DATE
INIT ISSUE	CL	FLB	4/21/04
TABLE REVISION	DW	FLB	8/19/04
TABLE REVISION	CL	FLB	10/6/04
-	-	-	-
-	-	-	-

04-113-0002

PAGE SCALE:
DESCRIPTION:
-
-

1 / 4

10/06/2004 - 2:42pm clangley F:\Project Files\Traco\04-113-0002 2100 Single-Hung (Non-Impact)\04-113-0002_02a Traco - 2100 Single-Hung (Non-Impact).dwg

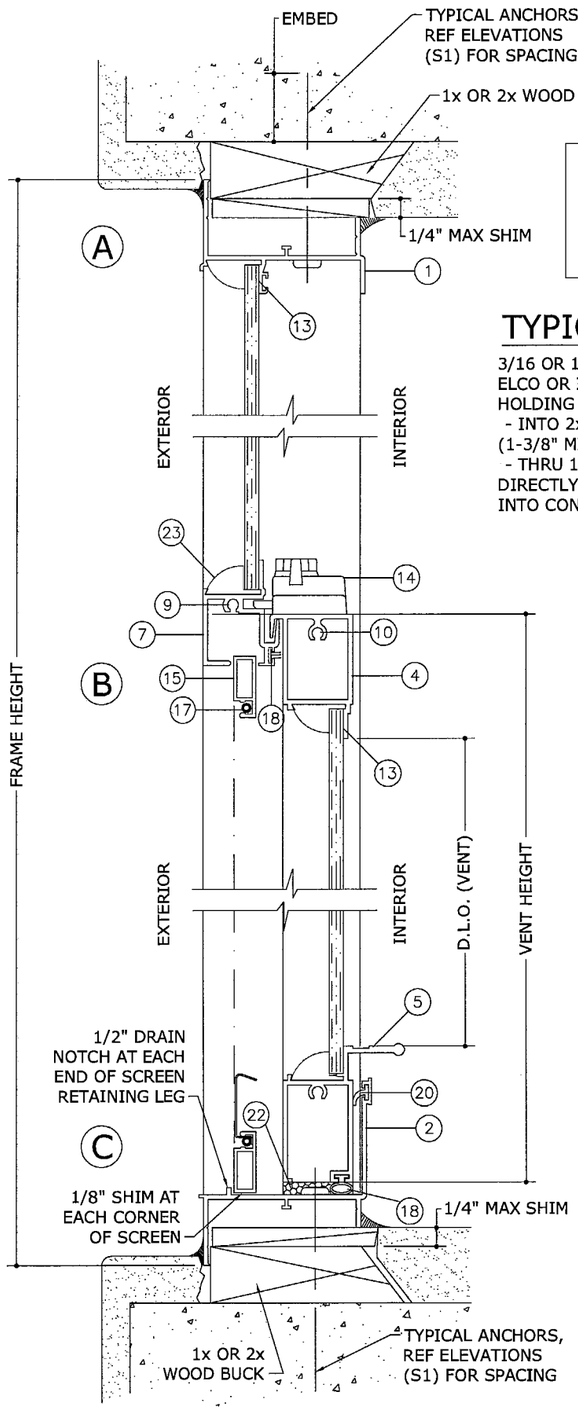

WOOD BUCKS, NOT BY TRACO, MUST SUSTAIN LOADS IMPOSED BY GLAZING SYSTEM AND TRANSFER THEM TO THE BUILDING STRUCTURE.

TYPICAL ANCHORS:

3/16 OR 1/4" TAPCONS W/ 3/16" HEAD (BY ELCO OR ITW) OR EQUIV CONC ANCHOR HOLDING CURRENT NOTICE OF ACCEPTANCE.
- INTO 2x WOOD BUCKS OR WOOD STRUCTURE (1-3/8" MIN PENETRATION INTO WOOD)
- THRU 1x WOOD BUCKS INTO MASONRY OR DIRECTLY INTO MASONRY (1-1/4" MIN EMBED INTO CONCRETE OR MASONRY)

SEALANT:

ALL FRAME AND VENT CORNERS, AND HEADS OF INSTALLATION SCREWS AT SILL TO BE SEALED WITH WHITE/ALUM COLORED SEALANT, FIXED MEETING RAIL AT ENDS SEALED WITH GE SILICONE.

ANCHOR NOTES:

1) ANCHORS SHALL BE INSTALLED IN ACCORDANCE WITH MANUFACTURERS' RECOMMENDATIONS.
2) WOOD BUCKS (NOT BY THIS MANUFACTURER) SHALL BE ANCHORED PROPERLY TO TRANSFER LOADS TO THE EXISTING STRUCTURE.
3) WOOD BUCKS AND/OR HOST STRUCTURE SHALL BE "SOUTHERN PINE" G=0.55 OR GREATER DENSITY.
4) ANCHORS SHALL BE AS LISTED, SPACED AS SHOWN HEREIN. MINIMUM EDGE DISTANCE AND EMBEDMENT TO BASE STRUCTURE EXCLUDES STUCCO, FOAM, BRICK, AND OTHER WALL FINISHES.
5) WHERE EXISTING STRUCTURE IS WOOD FRAMING, EXISTING CONDITIONS MAY VARY. FIELD VERIFY THAT FASTENERS ARE INTO ADEQUATE WOOD FRAMING MEMBERS.

MATERIALS LIST

ITEM NO.	PART NUMBER	QUANTITY	DESCRIPTION	MATERIAL	MANF./SUPLIER/REMARKS
1	050-00-367	1	HEAD	6063-T6	ALUMAX
2	050-00-375	1	SILL	6063-T6	TIFTON
3	050-00-366	2	JAMB	6063-T6	ALUMAX
4	051-00-164	1	VENT TOP	6063-T6	TIFTON
5	050-00-492	1	VENT BOTTOM	6063-T6	ALUMAX
6	050-00-160	2	VENT SIDE	6063-T6	TIFTON
7	050-00-119	1	MEETING RAIL	6063-T5	TIFTON
8	-	-	-	-	-
9	012-00-830	AS REQD.	FRAME ASSEMBLY SCREW	-	# 8 X 3/4" SMS
10	012-02-835	AS REQD.	VENT ASSEMBLY SCREW	-	# 8 X 1" SMS
11	047-40-012	4	WOOLPILE VENT SIDE	-	AMESBURY
12	-	-	-	-	-
13	024-00-018	AS REQD.	ACRYLIC BASED GLAZING COMPOUND	-	SCHNEE MOREHEAD 5555
14	007-10-016	2	SWEEP LOCK @ 7" FROM ENDS	ZAMAK	MARBOLLO INTL.
15	006-00-004	AS REQD.	ROLL FORMED SCREEN FRAME	-	OPTIONAL
16	048-00-002	AS REQD.	FIBERGLASS SCREEN MESH	-	-
17	046-16-005	AS REQD.	SCREEN MESH ROLL VINYL	-	-
18	WV-8502	AS REQD.	BULB WEATHERSTRIPPING	VINYL	WIBORG
19	-	-	-	-	-
20	046-16-016	1	FLAP SILL	VINYL	WIBORG
21	046-16-030	1/ JAMB	BLOCK AND TACKLE BALANCE	-	WINDOW COMPONENTS
22		2	CLOSED CELL FOAM PAD	-	1"X2"X1/4" AT EACH CORNER
23		AS REQD.	ROLL FORMED GLAZING BEAD	-	ALUMINUM
24	046-16-009	2	VINYL BULB	VINYL	-
25	046-00-300	2 (ALT)	PVC GLAZING BEAD	PVC	ALTERNATE TO VINYL BULB
26	050-300	2	ALUM GLAZING BEAD	6063-T5	-

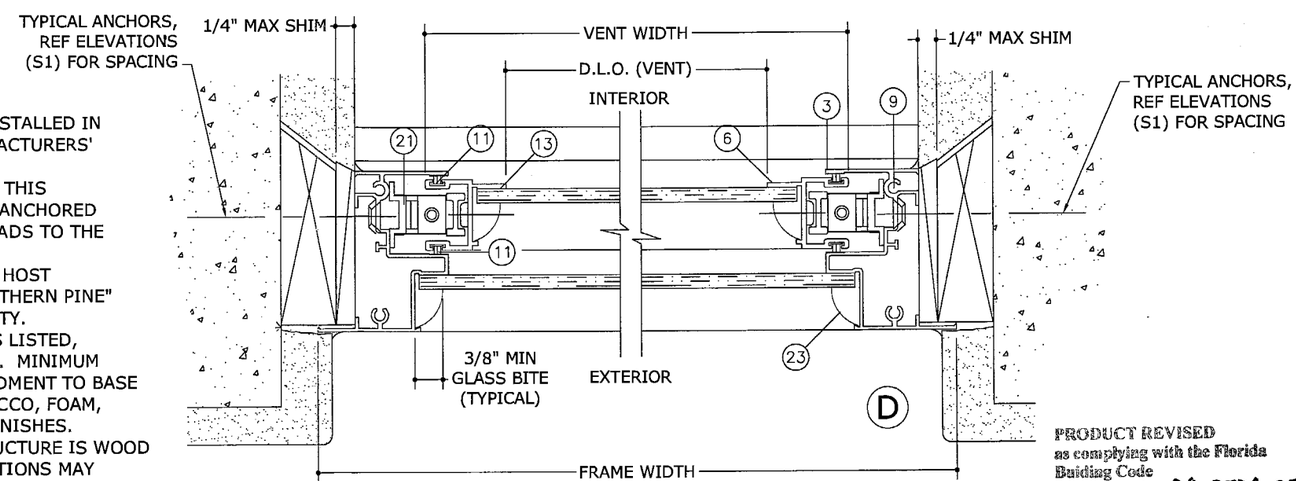

1/2 SINGLE GLAZED SECTION
6" = 1'-0" VERT. SECT.

2/2 HORIZONTAL SECTION DETAIL
6" = 1'-0" HORIZ. SECT.

PRODUCT REVISED
as complying with the Florida Building Code
Acceptance No. 04-0504.05
Expiration Date July 11, 2007
By Manuel Perez
Miami Dade Product Control Division

FRANK L. BENNARDO, P.E.
PE0046549
10/06/2004

FRANK L. BENNARDO, P.E., INC.
CONSULTING ENGINEERS
4441 NORTH DIXIE HIGHWAY
BOCA RATON, FL 33431
(561) 391-2888 FAX: (561) 391-2862
WWW.FLBENGINEERING.COM

TRACO
Windows & Doors Inc.
71 Progress Avenue
Cranberry Township, PA 16166
Tel: (724) 776-7000

SERIES 2100 ALUMINUM SINGLE-HUNG WINDOW
NON-IMPACT RESISTANT

REMARKS	DWN	CHKD	DATE
INIT ISSUE	CL	FLB	4/21/04
TABLE REVISION	DW	FLB	8/19/04
TABLE REVISION	CL	FLB	10/6/04

04-113-0002

PAGE SCALE:
DESCRIPTION:
-
-

F:\Project Files\Traco\04-113-0002 2100 Single-Hung (Non-Impact)\04-113-0002_02a Traco - 2100 Single-Hung (Non-Impact).dwg
10/06/2004 - 2:41pm clangley

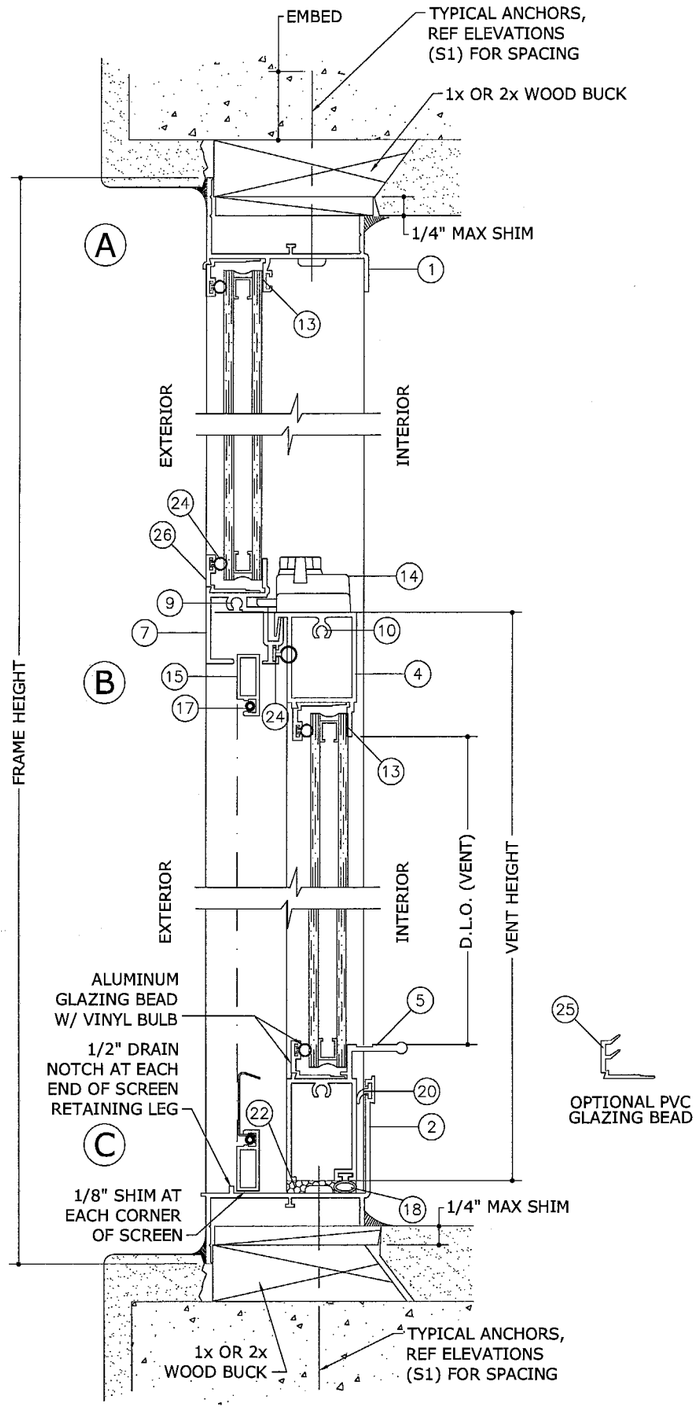

1/3 DOUBLE GLAZED SECTION (INSULATED GLAZING)

6" = 1'-0" VERT. SECT.

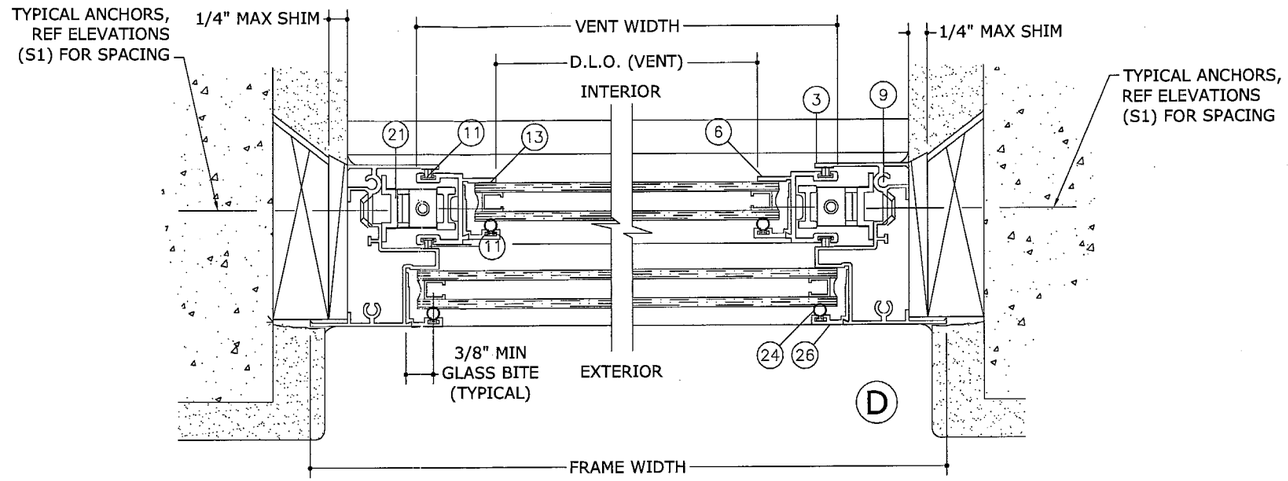

2/3 DOUBLE GLAZED SECTION (INSULATED GLAZING)

?" = 1'-0" VIEW

PRODUCT REVISED
as complying with the Florida
Building Code
Acceptance No. 04-0504.05
Expiration Date JULY 11, 2007
By Manuel Perez
Miami-Dade Product Control
Division

FRANK L. BENNARDO, P.E.
PE0046549
10/06/2004

FRANK L. BENNARDO, P.E., INC.
CONSULTING ENGINEERS
4441 NORTH DIXIE HIGHWAY
BOCA RATON, FL 33431
(561) 391-2888 FAX: (561) 391-2862
WWW.FLBENGINEERING.COM

TRACO
Windows & Doors Inc.
71 Progress Avenue
Cranberry Township, PA 16166
Tel: (724) 776-7000

SERIES 2100 ALUMINUM SINGLE-HUNG WINDOW
NON-IMPACT RESISTANT

REMARKS	DWN	CHKD	DATE
INIT ISSUE	CL	FLB	4/21/04
TABLE REVISION	DW	FLB	8/19/04
TABLE REVISION	CL	FLB	10/6/04

04-113-0002

PAGE SCALE:
DESCRIPTION:

3 4

10/06/2004 - 2:42pm clangley F:\Project Files\Traco\04-113-0002 2100 Single-Hung (Non-Impact)\04-113-0002_02a Traco - 2100 Single-Hung (Non-Impact).dwg

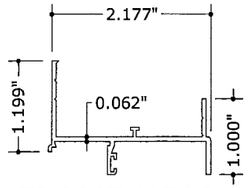

1 FRAME HEAD

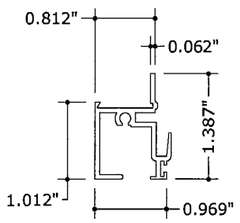

7 MEETING RAIL

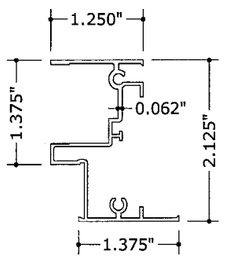

4 FRAME JAMB

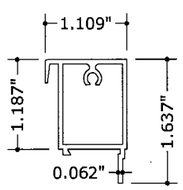

5 VENT TOP RAIL

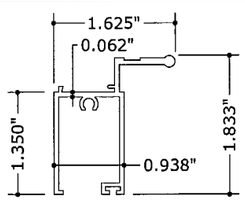

6 VENT BOTTOM RAIL

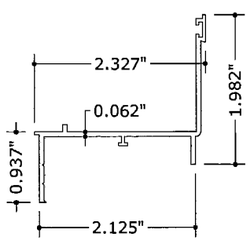

2 SILL

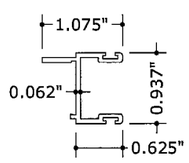

3 SASH SIDE RAIL

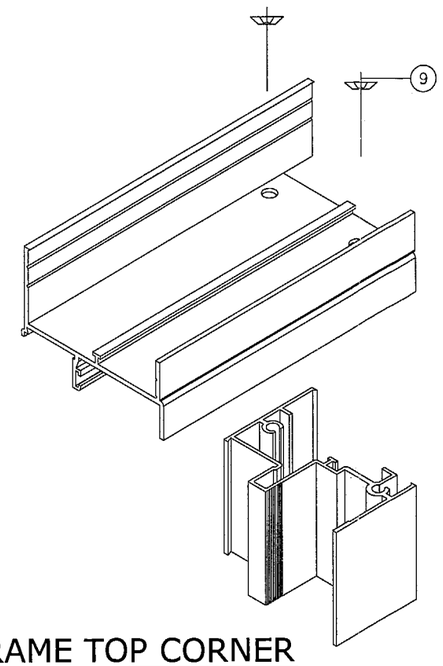

FRAME TOP CORNER

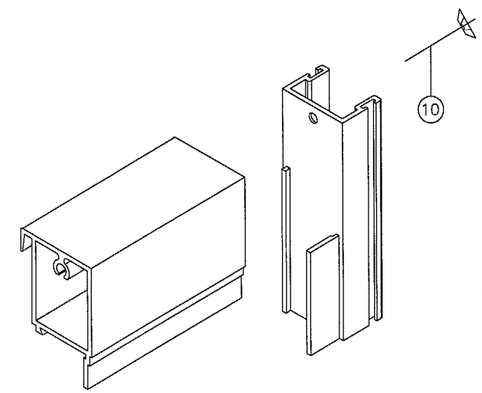

VENT TOP CORNER

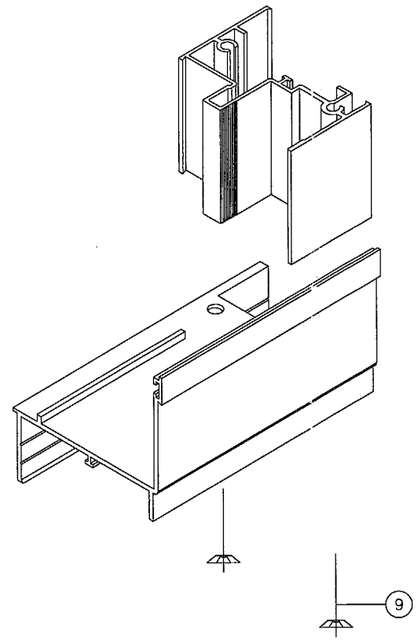

FRAME BOTTOM CORNER

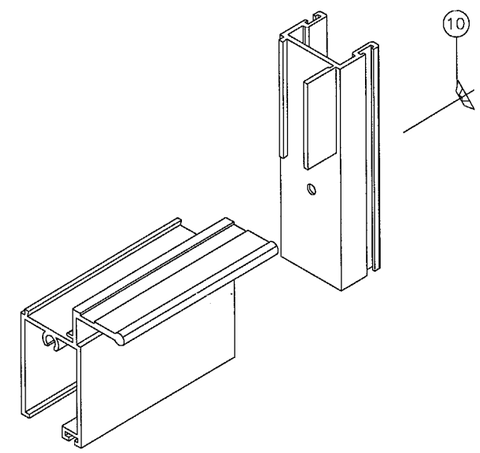

VENT BOTTOM CORNER

PRODUCT REVISED
as complying with the Florida
Buiding Code
Acceptance No. 04-0504.05
Expiration Date July 11, 2007
By Manuel Perez
Miami-Dade Product Control
Division

FRANK L. BENNARDO, P.E.
PE0046549
10/06/2004

FRANK L. BENNARDO, P.E., INC.
CONSULTING ENGINEERS
4441 NORTH DIXIE HIGHWAY
BOCA RATON, FL 33431
(561) 391-2888 FAX: (561) 391-2862
WWW.FLBENGINEERING.COM

TRACO
Windows & Doors Inc.
71 Progress Avenue
Cranberry Township, PA 16166
Tel: (724) 776-7000

SERIES 2100 ALUMINUM SINGLE-HUNG WINDOW
NON-IMPACT RESISTANT

REMARKS	DWN	CHKD	DATE
INIT ISSUE	CL	FLB	4/21/04
TABLE REVISION	DW	FLB	8/19/04
TABLE REVISION	CL	FLB	10/6/04
-	-	-	-
-	-	-	-

04-113-0002

PAGE SCALE:
DESCRIPTION:
-
-

10/06/2004 - 2:42pm clangley F:\Project Files\Traco\04-113-0002 2100 Single-Hung (Non-Impact)\04-113-0002_02a Traco - 2100 Single-Hung (Non-Impact).dwg