MIAMI-DADE

BUILDING CODE COMPLIANCE OFFICE (BCCO)
PRODUCT CONTROL DIVISION

MIAMI-DADE COUNTY, FLORIDA
METRO-DADE FLAGLER BUILDING
140 WEST FLAGLER STREET, SUITE 1603
MIAMI, FLORIDA 33130-1563
(305) 375-2901 FAX (305) 375-2908

NOTICE OF ACCEPTANCE (NOA)

NU-VUE Industries Inc.
1055 East 29 Street.
Hialeah, Florida 33013

SCOPE:

This NOA is being issued under the applicable rules and regulations governing the use of construction materials. The documentation submitted has been reviewed by Miami-Dade County Product Control Division and accepted by the Board of Rules and Appeals (BORA) to be used in Miami Dade County and other areas where allowed by the Authority Having Jurisdiction (AHJ).

This NOA shall not be valid after the expiration date stated below. The Miami-Dade County Product Control Division (In Miami Dade County) and/or the AHJ (in areas other than Miami Dade County) reserve the right to have this product or material tested for quality assurance purposes. If this product or material fails to perform in the accepted manner, the manufacturer will incur the expense of such testing and the AHJ may immediately revoke, modify, or suspend the use of such product or material within their jurisdiction. BCPRC reserves the right to revoke this acceptance, if it is determined by Miami-Dade county Product Control Division that this product or material fails to meet the requirements of the applicable building code.
This product is approved as described herein, and has been designed to comply with the Florida Building Code including High velocity Hurricane Zone.

DESCRIPTION: Wood Connectors.

APPROVAL DOCUMENT: Drawing No.**Nu-5**, titled "Skewed Nail Plate, NV358 & NV458 with Double NVTH Straps, NVTH/NVTHS Anchors & NVHC Hurricane Clips and NVSTA & NVHTA Heavy Duty Anchors with Seat" sheet 1, through 4 of 4, dated 04/15/04 with last revision on 09/20/04, prepared by Nu-Vue Industries Inc signed and sealed by V. N. Tolat, PE, bearing the Miami-Dade County Product Control Approval stamp with the Notice of Acceptance (NOA) number and approval date by the Miami-Dade County Product Control Division.

MISSILE IMPACT RATING: None

LABELING: Each unit shall bear a permanent label with the manufacturer's name or logo, city, state and following statement: "Miami-Dade County Product Control Approved", unless otherwise noted herein.

RENEWAL of this NOA shall be considered after a renewal application has been filed and there has been no change in the applicable building code negatively affecting the performance of this product.

TERMINATION of this NOA will occur after the expiration date or if there has been a revision or change in the materials, use, and/or manufacture of the product or process. Misuse of this NOA as an endorsement of any product, for sales, advertising or any other purposes shall automatically terminate this NOA. Failure to comply with any section of this NOA shall be cause for termination and removal of NOA.

ADVERTISEMENT: The NOA number preceded by the words Miami-Dade County, Florida, and followed by the expiration date may be displayed in advertising literature. If any portion of the NOA is displayed, then it shall be done in its entirety.

INSPECTION: A copy of this entire NOA shall be provided to the user by the manufacturer or its distributors and shall be available for inspection at the job site at the request of the Building Official.
This NOA consists of this page 1, evidence page & approval document mentioned above.
The submitted documentation was reviewed by **Candido F. Font PE.**

12/23/04

PRODUCT CONTROL ACCEPTED

NOA No: 04-0510.03
Expiration Date: December 23, 2009
Approval Date: December 23, 2004

Nu-Vue Industries, Inc.

NOTICE OF ACCEPTANCE: EVIDENCE PAGE

A DRAWINGS

1. Drawings prepared by Nu-Vue Industries Inc, titled "Skewed Nail Plate, NV358 & NV458 with Double NVTH Straps, NVTH/NVTHS Anchors & NVHC Hurricane Clips and NVSTA & NVHTA Heavy Duty Anchors with Seat", Drawing No. NU-5, sheets No. 1, through 4 of 4, dated 04/15/04 with last revision on 09/20/04, signed and sealed by V. N. Tolat, PE.

B TEST

Test reports on wood connectors per ASTM D1761 by Product Testing Inc, signed and sealed by C. R. Caudel, PE.

	Report No.	Wood Connector	Direction	Date
1.	PT # 03-4482	NVSNP3	Downward	09/15/03
2	PT # 03-4625	NVHCL/R	Up& Sideways	01/21/04
3	PT # 04-4641	NVSTA-24H	Up& Sideways	03/17/04
4.	PT # 04-4698	NVTH24	Up& Sideways	04/15/04
5	PT # 03-4590	NVTH26/NV458	Sideways	12/31/03
6.	PT # 04-4642	NVHTA-24H	Up& Sideways	03/22/04
7.	PT # 03-4543	NVTH20/NV358	Up& Sideways	12/19/03

C CALCULATIONS

Report of Design Capacities prepared by V. N. Tolat on 04/27/04, sheet 1 through 12, signed and sealed by V. N. Tolat PE.

D QUALITY ASSURANCE

1. Product Control Division

E STATEMENTS

1. Code compliance letter issue by V. N. Tolat on 04/27/04 signed and sealed by V. N. Tolat, PE.
2. No interest letter issued by V. N. Tolat on 11/03/04 signed and sealed by V. N. Tolat, PE.

12/23/04

Candido F. Font PE.
Sr. Product Control Examiner
NOA No 04-0510.03
Expiration Date: December 23, 2009
Approval Date: December 23, 2004

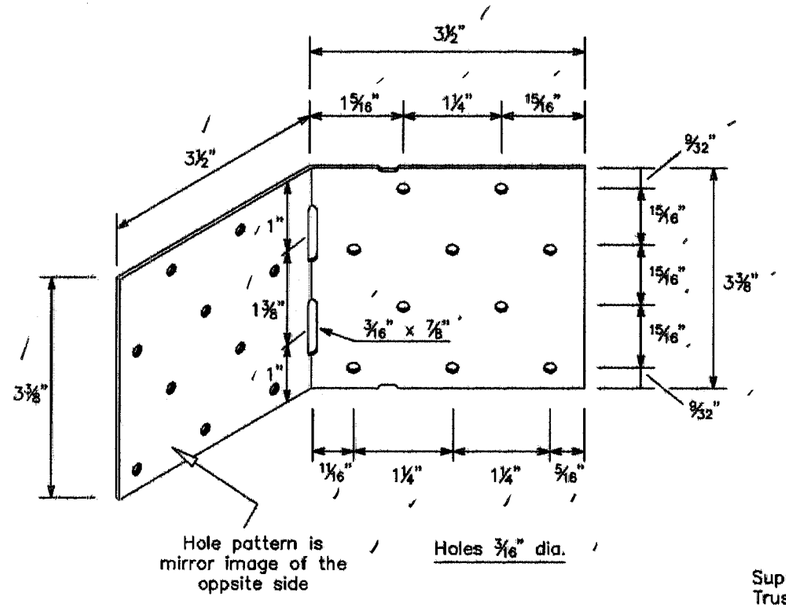

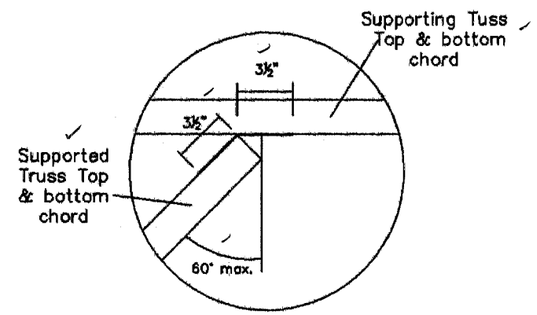

NVSNP3 Installation

TABLE 1
SKEWED NAIL PLATE

Product Code	Steel Gauge	Fastener Schedule	Allowable Loads (lbs)	
		Each End	Gravity	Uplift
NVSNP3	16	(6) 8d x 1½"	578	594

For Uplift, use two NVSNP3, one at top chord and one at bottom chord of the supporting and supported Trusses in compliance with section 2321.7 of the FBC.

Notes:

1. Use 6 nail holes in each flange.

2. Do not bend nail plate more than once.

3. Supporting member shall be in the acute angle side with other flange behind the end of supported member (see sketch.)

Approved as complying with the Florida Building Code
Date 12/23/04
NOA# 04-0510.03
Miami Dade Product Control Division
By

General Notes:

1. Steel shall conform to ASTM A653, structural grade 33 (Min. yield 33 ksi) and a minimum galvanized coating of G 60 per ASTM A525.

2. Allowable loads are based on National Desing specifications (NDS) for wood construction, 1997 Edition.

3. Design loads are for Southern Pine species with a specific gravity of 0.55. Allowable loads for other species shall be adjusted accordingly.

4. Common wire nail values are based on NDS table 12.3F, G=0.55 and have been reduced for Penetration Depth factor Cd.

5. Allowable loads for wind uplift have already been increased by a duration factor of 33% for anchor nail. This increase is not allowed for steel stress if dead load and wind loads are combined. Load values shown are, without 33% steel stress increase.

6. Allowable loads for more than a single connection cannot be added together. A design load which is divided into components in the direction given must be evaluated as follows:

$$\frac{\text{Actual Uplift}}{\text{Allowable Uplift}} + \frac{\text{Actual L1}}{\text{Allowable L1}} + \frac{\text{Actual L2}}{\text{Allowable L2}} <= 1.0$$

7. Allowable loads are based on 1½" thick wood members unless otherwise noted.

8. All tie beams and grouted concrete masonry shall comply with chapter 21 of FBC. Concrete for tie beams and grout and mortar for concrete masonry shall be a minimum of 2500 psi. Concrete masonry shall comply with ASTM C90.

9. All tests have been conducted in accordance with ASTM D-1761.

VIPIN N. TOLAT, PE (CIVIL)
FL. REG. # 12847
15123 LANTERN CREEK LANE
HOUSTON, TX 77068

11/3/04

Nu-Vue Industries, Inc.
1053-1059 East 29 Street
Hialeah, Florida 33013
(305) 694-0397
FAX: (305) 694-0398

SKEWED NAIL PLATE

DWG #:	Sheet:	Date:	Revisions:
NU-5	1 of 4	APRIL 15, 2004	Sept. 20, 2004

TABLE 2: NV358 – 14G Double NVTH Straps with 2 ply 18G seat

Assembly Product Code	14G Strap Product Code	Dimension H (inches)	Total No. of Fasteners in 2 Straps 10d x 3"	Total No. of Fasteners in Seat 10d x 3"	Allowable Loads (lbs)		
					Uplift	L1	L2
NV358-12	NVTH16	12	8	8	2245	1961	1839
NV358-14	NVTH18	14	10	8	2525	2206	2068
NV358-16	NVTH20	16	12	8	2806	2452	2298
NV358-20	NVTH24	20	14	8	3086	2697	2528
NV358-22	NVTH26	22	16	8	3367	2942	2758
NV358-24	NVTH28	24					
NV358-26	NVTH30	26					
NV358-32	NVTH36	32					
NV358-44	NVTH48	44					

TABLE 3: NV458 – 14G Double NVTH Straps with 3 ply 18G seat

Assembly Product Code	14G Strap Product Code	Dimension H (inches)	Total No. of Fasteners in 2 Straps 10d x 3"	Total No. of Fasteners in Seat 10d x 3"	Allowable Loads (lbs)		
					Uplift	L1	L2
NV458-12	NVTH16	12	8	8	2245	2783	2078
NV458-14	NVTH18	14	10	8	2525	3131	2338
NV458-16	NVTH20	16	12	8	2806	3479	2597
NV458-20	NVTH24	20	14	8	3086	3827	2857
NV458-22	NVTH26	22	16	8	3367	4175	3117
NV458-24	NVTH28	24					
NV458-26	NVTH30	26					
NV458-32	NVTH36	32					
NV458-44	NVTH48	44					

Notes:

1. Minimum embedment into concrete 4".
2. Nails are necesary in straps and seat to achieve design loads.
3. See Note 6 (Sheet 1) for combined load.
4. Nails through chords shall not force the truss plate on the opposite side.

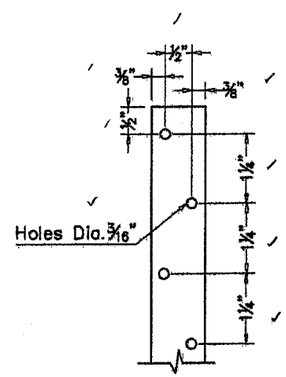

14G NVTH

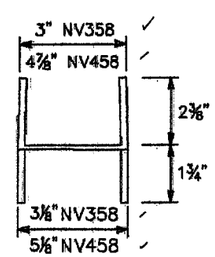

Side View

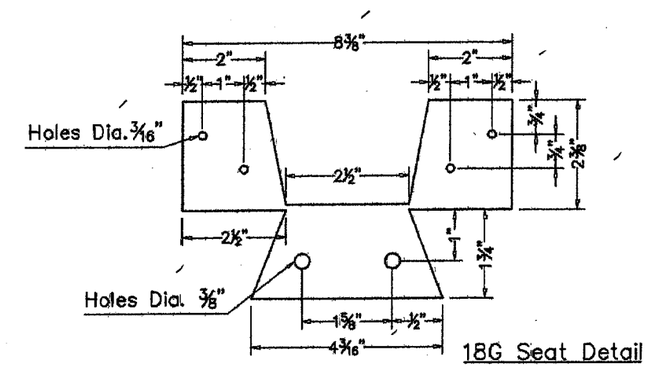

18G Seat Detail

NV358 and NV458

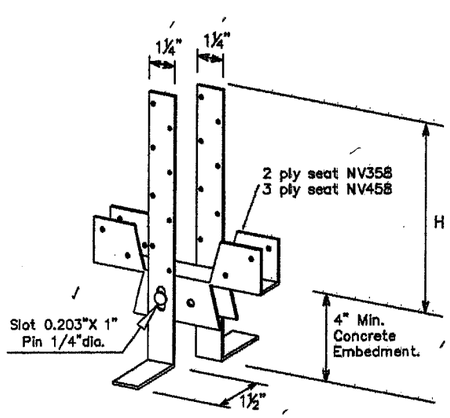

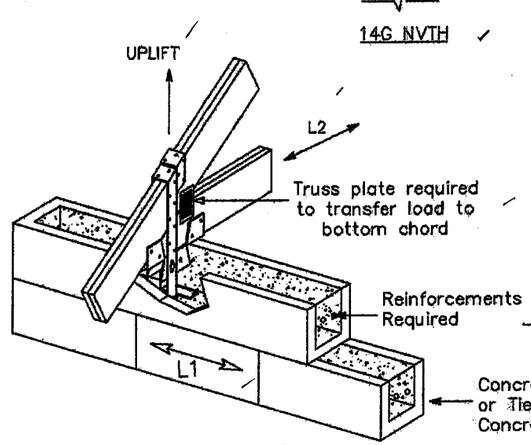

Approved as complying with the Florida Building Code
Date 12/23/04
NOA# 04-0510.03
Miami Dade Permit Control Division
By

VIPIN N. TOLAT, PE (CIVIL)
FL. REG. # 12847
15123 LANTERN CREEK LANE
HOUSTON, TX 77068

11/3/04

Nu-Vue Industries, Inc.
1053-1059 East 29 Street
Hialeah, Florida 33013
(305) 694-0397
FAX: (305) 694-0398

NV358 & NV458 WITH DOUBLE NVTH STRAPS

DWG #:	Sheet:	Date:	Revisions:
NU-5	2 of 4	APRIL 15, 2004	Sept. 20, 2004

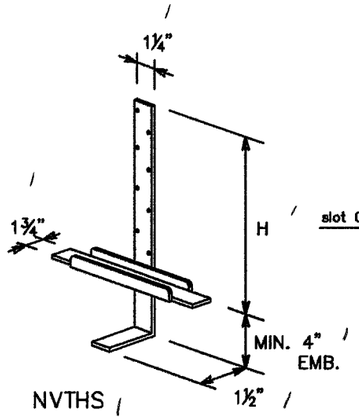

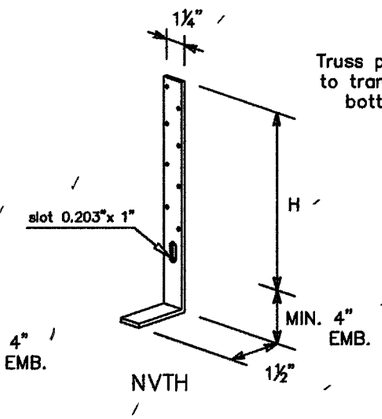

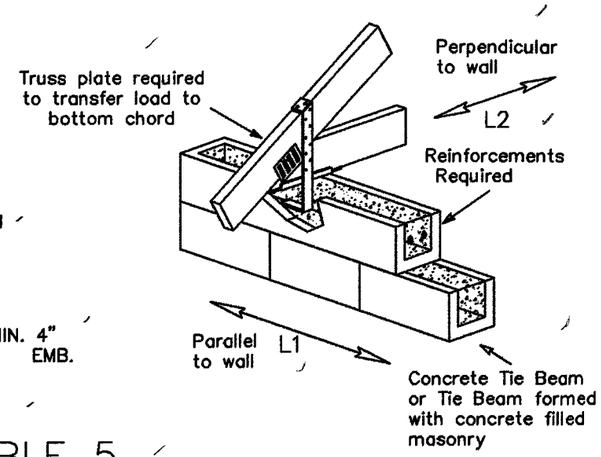

TABLE 4

Truss Anchors NVTH and Riveted Truss Anchors with Seat NVTHS

H Length (in)	Product Code		Gauge seat	Gauge strap
12	NVTH-16	NVTHS 212	18	14
14	NVTH-18	NVTHS 214	18	14
16	NVTH-20	NVTHS 216	18	14
18	NVTH-22	NVTHS 218	18	14
20	NVTH-24	NVTHS 220	18	14
22	NVTH-26	NVTHS 222	18	14
24	NVTH-28	NVTHS 224	18	14
26	NVTH-30	NVTHS 226	18	14
32	NVTH-36	NVTHS 232	18	14
44	NVTH-48	NVTHS 244	18	14

No. of Fasteners in Strap 10d x 1.5"	Maximum Allowable Load (lbs)		
	Uplift	L1	L2
5	700	560	525
6	838	671	630
7	977	783	735
8	1117	783	735
9	1256	783	735
10	1396	783	735
11	1490	783	735
12	1544	783	735
13	1598	783	735

TABLE 5

HURRICANE CLIPS

Product Code	Description	Gauge	Fasteners 10d x 1½"		Allowable Loads (lbs)		
			Header	Joist	Uplift	L1	L2
NVHCR	HURRICANE CLIP – RIGHT	18	6	6	525	253	333
NVHCL	HURRICANE CLIP – LEFT	18	6	6	525	253	333

For Uplift, use two clips, one on each side to comply with section 2321.7 of the FBC

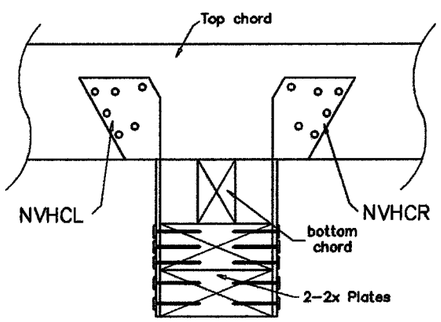

Cross-Section

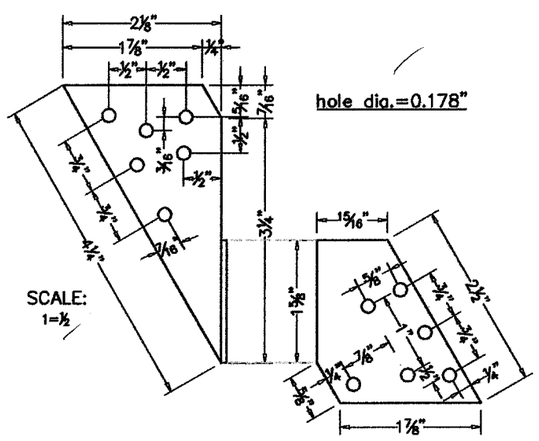

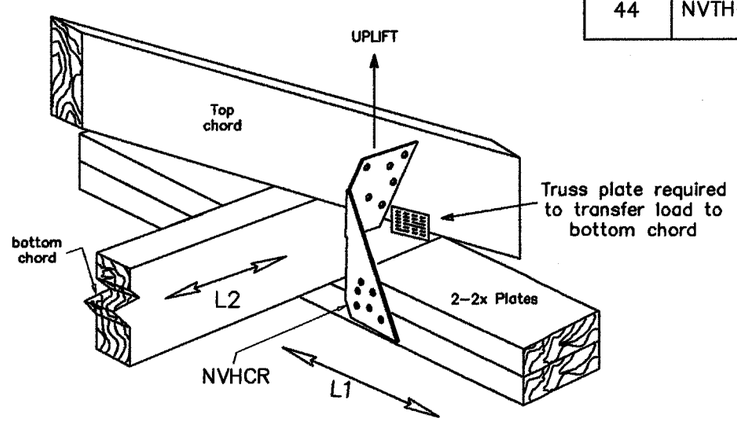

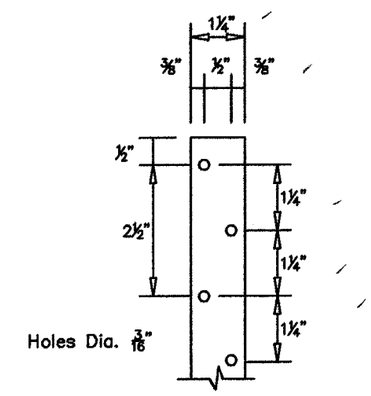

NVTH, NVTHS

Approved as complying with the Florida Building Code
Date 12/23/04
NOA# 04-0510.03
Miami Dade Product Control Division
By

VIPIN N. TOLAT, PE (CIVIL)
FL. REG. # 12847
15123 LANTERN CREEK LANE
HOUSTON, TX 77068

11/3/04

Nu-Vue Industries, Inc.
1053-1059 East 29 Street
Hialeah, Florida 33013
(305) 694-0397
FAX: (305) 694-0398

NVTH / NVTHS ANCHORS & NVHC HURRICANE CLIPS

DWG #:	Sheet:	Date:	Revisions:
NU-5	3 of 4	APRIL 15, 2004	Sept. 20, 2004

TABLE 6

NVSTA–Heavy Duty Anchors with 14G NVTH Straps and 1 ply 20G seat

Assembly Product Code	14G Strap Product Code	Dimension H (inches)	Total No. of Fasteners in Strap 10d x 1½"	Total No. of Fasteners in 20 GA. Seat 10d x 1½"	Allowable Loads (lbs)		
					Uplift [6]	L1 [6]	L2 [6]
NVSTA–12H	NVTH16	12	5	6	1308	700	1049
NVSTA–14H	NVTH18	14	6	6	1426	760	1144
NVSTA–16H	NVTH20	16	7	6	1545	823	1239
NVSTA–20H	NVTH24	20	8	6	1664	887	1335
NVSTA–22H	NVTH26	22	9	6	1783	950	1430
NVSTA–24H	NVTH28	24					
NVSTA–26H	NVTH30	26					
NVSTA–32H	NVTH36	32					
NVSTA–44H	NVTH48	44					

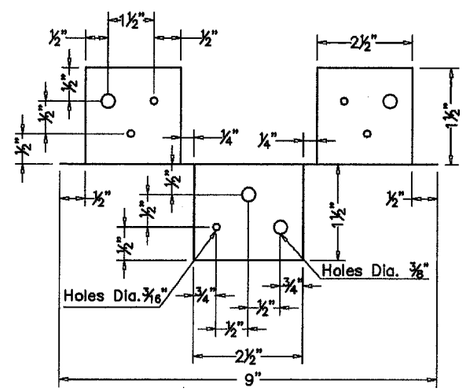

20G Seat

TABLE 7

NVHTA–Heavy Duty Anchors with 14G Double NVTH Straps and 1 ply 20G seat

Assembly Product Code	14G Strap Product Code	Dimension H (inches)	Total No. of Fasteners in two Straps 10d x 1½"	Total No. of Fasteners in 20 GA. Seat 10d x 1½"	Allowable Loads (lbs)			
					Uplift [6]	Uplift [5]	L1 [6]	L2 [6]
NVHTA–12H	NVTH16	12	10	6	1772	2078	1050	1450
NVHTA–14H	NVTH18	14	12	6	1994	2338	1181	1631
NVHTA–16H	NVTH20	16	14	6	2215	2598	1312	1812
NVHTA–20H	NVTH24	20	16	6	2437	2858	1444	1994
NVHTA–22H	NVTH26	22	18	6	2658	3117	1575	2175
NVHTA–24H	NVTH28	24						
NVHTA–26H	NVTH30	26						
NVHTA–32H	NVTH36	32						
NVHTA–44H	NVTH48	44						

Notes:
1. Nails are necessary in straps and seat to achieve, desing loads.
2. See note 6, sheet 1 for combined loading.
3. Nails through chords shall not force the truss plates.
4. For general notes, see sheet 1.
5. For higher uplift loads, concrete shall be 3000 psi.
6. Based on min. 2500 psi concrete.

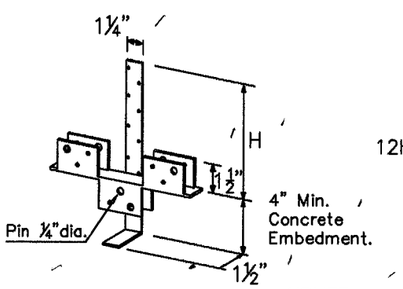

NVSTA
12H throght 44H

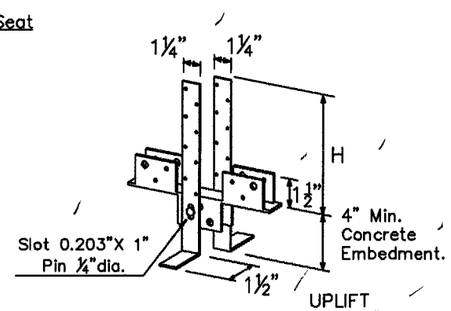

NVHTA
12H throght 44H

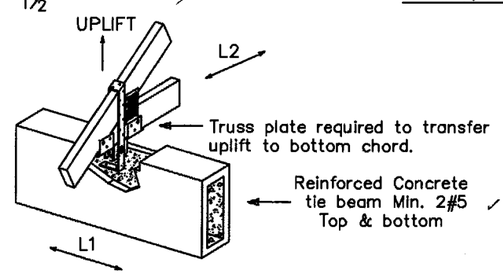

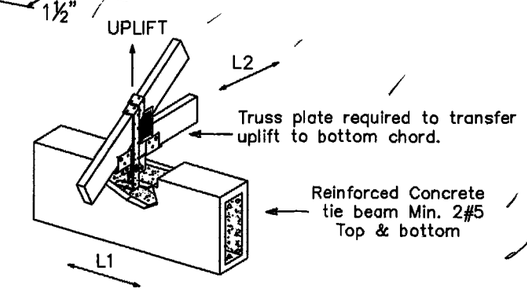

Approved as complying with the Florida Building Code
Date 12/23/04
NOA# 04-0510.03
Miami Dade Product Control Division
By

VIPIN N. TOLAT, PE (CIVIL)
FL. REG. # 12847
15123 LANTERN CREEK LANE
HOUSTON, TX 77068

11/3/04

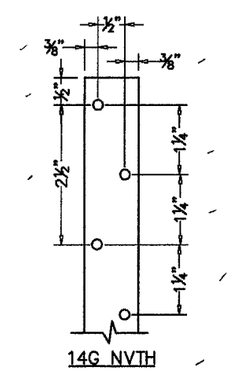

14G NVTH

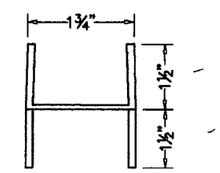

Side View
20 GA. Seat

Nu-Vue Industries, Inc.
1053-1059 East 29 Street
Hialeah, Florida 33013
(305) 694-0397
FAX: (305) 694-0398

NVSTA & NVHTA HEAVY DUTY ANCHORS WITH SEAT

DWG #:	Sheet:	Date:	Revisions:
NU-5	4 of 4	APRIL 15, 2004	Sept. 20, 2004