MIAMI-DADE

BUILDING CODE COMPLIANCE OFFICE (BCCO)
PRODUCT CONTROL DIVISION

MIAMI-DADE COUNTY, FLORIDA
METRO-DADE FLAGLER BUILDING
140 WEST FLAGLER STREET, SUITE 1603
MIAMI, FLORIDA 33130-1563
(305) 375-2901 FAX (305) 375-2908

NOTICE OF ACCEPTANCE (NOA)

Rollingshield, Inc.
2500 N.W. 74th Avenue
Miami, Florida 33122

SCOPE:

This NOA is being issued under the applicable rules and regulations governing the use of construction materials. The documentation submitted has been reviewed by Miami-Dade County Product Control Division and accepted by the Board of Rules and Appeals (BORA) to be used in Miami Dade County and other areas where allowed by the Authority Having Jurisdiction (AHJ).

This NOA shall not be valid after the expiration date stated below. The Miami-Dade County Product Control Division (In Miami Dade County) and/or the AHJ (in areas other than Miami Dade County) reserve the right to have this product or material tested for quality assurance purposes. If this product or material fails to perform in the accepted manner, the manufacturer will incur the expense of such testing and the AHJ may immediately revoke, modify, or suspend the use of such product or material within their jurisdiction. BORA reserves the right to revoke this acceptance, if it is determined by Miami-Dade County Product Control Division that this product or material fails to meet the requirements of the applicable building code.

This product is approved as described herein, and has been designed to comply with the High Velocity Hurricane Zone of the Florida Building Code.

DESCRIPTION: " ASSA / Big Bertha Hi-Rise " Aluminum Accordion Shutter System

APPROVAL DOCUMENT: Drawing No. 04-023, titled " ASSA / Big Bertha Hi – Rise Accordion Shutter ", sheets 1 through 10 of 10, and sheet 1A, prepared by Tilteco, Inc., dated February 27, 2004, signed and sealed by Walter A. Tillit Jr., P.E. bearing the Miami-Dade County Product Control Revision stamp with the Notice of Acceptance number and Expiration date by the Miami-Dade County Product Control Division.

MISSILE IMPACT RATING: Large and Small Missile Impact

LABELING: Each unit shall bear a permanent label with the manufacturer's name or logo, city, state and the following statement: "Miami-Dade County Product Control Approved", unless otherwise noted herein.

RENEWAL of this NOA shall be considered after a renewal application has been filed and there has been no change in the applicable building code negatively affecting the performance of this product.

TERMINATION of this NOA will occur after the expiration date or if there has been a revision or change in the materials, use, and/or manufacture of the product or process. Misuse of this NOA as an endorsement of any product, for sales, advertising or any other purposes shall automatically terminate this NOA. Failure to comply with any section of this NOA shall be cause for termination and removal of NOA.

ADVERTISEMENT: The NOA number preceded by the words Miami-Dade County, Florida, and followed by the expiration date may be displayed in advertising literature. If any portion of the NOA is displayed, then it shall be done in its entirety.

INSPECTION: A copy of this entire NOA shall be provided to the user by the manufacturer or its distributors and shall be available for inspection at the job site at the request of the Building Official.

This NOA **revises NOA # 01-1018.02** and consists of this page 1, evidence submitted page(s), as well as approval document mentioned above.

The submitted documentation was reviewed by **Helmy A. Makar, P.E.**

PRODUCT CONTROL ACCEPTED

Helmy A. Makar
06/17/2004

NOA No 04-0524.01
Expiration Date: 10/19/2006
Approval Date: 06/17/2004
Page 1

Rollingshield, Inc.

NOTICE OF ACCEPTANCE: EVIDENCE SUBMITTED

1. EVIDENCE SUBMITTED UNDER PREVIOUS APPROVAL # 01-1018.02

A. DRAWINGS

1. *Drawing No. 01-101, titled "ASSA / Big Bertha Hi-Rise Accordion Shutter", prepared by Tilteco Inc., dated April 18, 2001, sheets 1 through 10 of 10, signed and sealed by Walter A. Tillit Jr., P.E.*

B. TESTS

1. *See Association's generic approval under 00-0160.*

C. CALCULATIONS

1. *See Association's generic approval under 00-0160.*

D. MATERIAL CERTIFICATIONS

1. *See Association's generic approval under 00-0160.*

E. STATEMENTS

1. *Release letter issued by the American Shutter Systems Association, Inc., dated April 24, 2001, certifying this product to meet the criteria of product tested and approved, and allowing Rollingshield, Inc. to use the test results approved under Miami-Dade County Approval No. 00-0160, signed by Ms. Trudy Kip.*
2. *Acknowledgment letter by Rollingshield, Inc., dated October 18, 2001, signed by Mr. Jose Delgado.*
3. *Letter by Tilteco Inc., dated October 16, 2001, certifying that the drawing (No. 01-101) prepared for Rollingshield, Inc., signed and sealed by Mr. Walter A. Tillit Jr., P.E., is engineering wise identical to ASSA's generic drawing (No. 99-301).*
4. *Acceptance Letter issued to Mr. Jose Delgado on October 18, 2001 and returned signed by Mr. Jose Delgado on October 19, 2001, indicating to please issue the proposed Notice of Acceptance as submitted and reviewed.*

2. NEW EVIDENCE SUBMITTED

A. DRAWINGS

1. *Drawing No. 04-023, titled " ASSA / Big Bertha Hi – Rise Accordion Shutter ", sheets 1 through 10 of 10, and sheet 1A, prepared by Tilteco, Inc., dated February 27, 2004, signed and sealed by Walter A. Tillit Jr., P.E.*

B. TESTS

1. *None. See Association's generic approval under 03-0116.*

Helmy A. Makar

Helmy A. Makar, P. E.
Product Control Examiner
NOA No 04-0524.01
Expiration Date: 10/19/2006
Approval Date: 06/17/2004

C. CALCULATIONS

1. *None. See Association's generic approval under 03-0116.*

D. QUALITY ASSURANCE

1. *By Miami-Dade County Building Code Compliance Office.*

E. MATERIAL CERTIFICATIONS

1. *None. See Association's generic approval under 03-0116.*

F. STATEMENTS

1. *Letter by Tilteco Inc., dated February 27, 2004, certifying that the change from drawing (No. 04-023) prepared for Rollingshield, Inc., signed and sealed by Mr. Walter A. Tillit Jr., P.E., as opposed to previously approved drawing #01-101 are on General Note #1, to reference to the Florida Building Code, and to General Note #12 to reference the Florida Board of Engineers Notes.*

Helmy A. Makar, P. E.
Product Control Examiner
NOA No 04-0524.01
Expiration Date: 10/19/2006
Approval Date: 06/17/2004

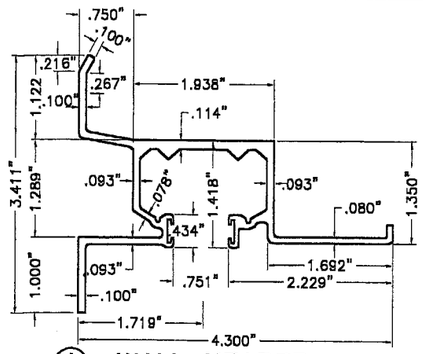

(A) WALL HEADER

SCALE: 1/2"=1"

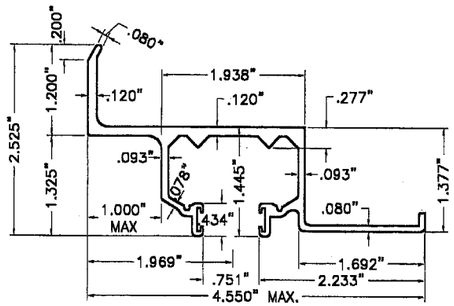

(A1) WALL HEADER

SCALE: 1/2"=1"

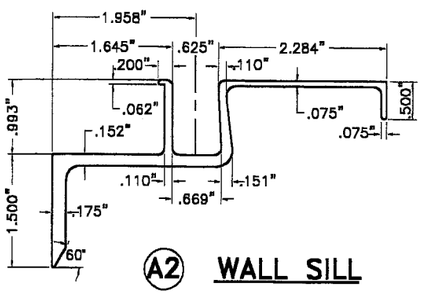

(A2) WALL SILL

(6005-T5 ALUMINUM ALLOY)

SCALE: 1/2"=1"

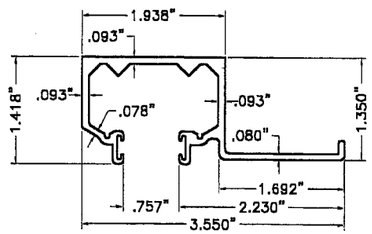

(B) CEILING HEADER

SCALE: 1/2"=1"

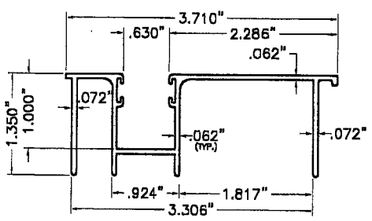

(C) SILL

SCALE: 1/2"=1"

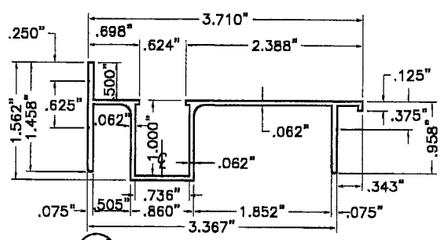

(C') ALTERNATE SILL

SCALE: 1/2"=1"

COMPONENTS

GENERAL NOTES:

1. ACCORDION SHUTTER SHOWN ON THIS PRODUCT APPROVAL DOCUMENT HAS BEEN DESIGNED IN ACCORDANCE WITH THE 2001 EDITION OF THE FLORIDA BUILDING CODE. DESIGN WIND LOADS SHALL BE DETERMINED AS PER SECTION 1619 OF THE ABOVE MENTIONED CODE, FOR A BASIC WIND SPEED OF 146 m.p.h., AND IN ACCORDANCE W/ ASCE 7-98 STANDARD. ACCORDION SHUTTER'S ADEQUACY FOR IMPACT AND FATIGUE RESISTANCE HAS BEEN VERIFIED IN ACCORDANCE WITH SECTION 1606.1.4 OF THE ABOVE MENTIONED CODE AS PER ATL REPORT # 0316.01-00 AND PA-201, PA-202, AND PA-203.

2. STAINLESS STEEL SHEET METAL SCREWS USED AT LOUVER PIN SHALL BE # 14 x 3", 410-HT MINIMUM SERIES W/ 135.0 ksi YIELD POINT & 180.0 ksi TENSILE STRENGTH. SCREWS SHALL BE COATED WITH XYLAN 5000 SERIES FLUOROPOLYMER COATINGS AS MANUFACTURED BY WHITFORD Co, BOX 507, WEST CHESTER PA. 19381, OR ALTERNATIVELY A #14 x 3" , 410-HT MINIMUM SERIES W/ 150.0 ksi YIELD POINT & 180.0 ksi TENSILE STRENGTH, W/ MAC DERMID INC. JS 500 PLATING AND MANUFACTURED TO ASTM F 593-95.

3. ALL ALUMINUM EXTRUSIONS SHALL BE 6063-T6 ALLOY UNLESS OTHERWISE NOTED.

4. ALL SCREWS TO BE STAINLESS STEEL 304 OR 316 SERIES W/ 50 ksi YIELD POINT AND 90 ksi TENSILE STRENGTH OR CORROSION RESISTANT COATED CARBON STEEL AS PER DIN 50018.

5. ALL ALUMINUM POP RIVETS TO BE 5052 ALUMINUM ALLOY WITH ALUMINUM MANDREL.

6. BOLTS TO BE 2024-T4 ALUMINUM ALLOY, GALVANIZED OR STAINLESS STEEL WITH 36 ksi MINIMUM YIELD POINT.

7. ANCHORS TO WALL SHALL BE AS FOLLOWS: (UNLESS OTHERWISE NOTED)
(A) TO EXISTING POURED CONCRETE: (Min. f'c = 3 ksi)
- 1/4"ø TAPCON AND MAXI-SET TAPCON, AS MANUFACTURED BY I.T.W. BUILDEX.
- 5/16"ø & 3/8"ø RED HEAD DYNABOLT SLEEVE ANCHORS, AS MANUFACTURED BY I.T.W. BUILDEX/RED HEAD.
- 1/4"ø x 7/8" CALK-IN ANCHORS AS MANUFACTURED BY POWERS FASTENING, INC.
- 1/4"ø CRETE FLEX SS4 AS MANUFACTURED BY ELCO TEXTRON.

NOTES:
A.1) MINIMUM EMBEDMENT INTO POURED CONCRETE OF TAPCON ANCHORS, MAXI-SET TAPCONS & CRETE-FLEX SS4 IS 1 3/4", AND FOR RED HEAD DYNABOLTS IS 1 1/2".
A.2) 1/4"ø x 7/8" CALK-IN ANCHORS SHALL BE ENTIRELY EMBEDDED INTO THE POURED CONCRETE. NO EMBEDMENT INTO STUCCO SHALL BE PERMITTED.
1/4" ø-20 SCREWS USED SHALL BE 1 1/2" LONG MINIMUM SHOULD STUCCO EXIST, AND 1" MINIMUM FOR WALLS WITH NO STUCCO.
A.3) IN CASE THAT PRECAST STONE, PRECAST CONCRETE PANELS, OR PAVERS BE FOUND ON THE EXISTING WALL OR FLOOR, ANCHORS SHALL BE LONG ENOUGH TO REACH THE MAIN STRUCTURE BEHIND SUCH PANELS. ANCHORAGE SHALL BE AS INDICATED ON NOTES A.1) & A.2) ABOVE.

(B) TO EXISTING CONCRETE BLOCK WALL:
- 1/4"ø TAPCON AND MAXI-SET TAPCON, AS MANUFACTURED BY I.T.W. BUILDEX.
- 5/16"ø & 3/8"ø RED HEAD DYNABOLT SLEEVE ANCHORS, AS MANUFACTURED BY I.T.W. BUILDEX/RED HEAD.
- 1/4"ø x 7/8" CALK-IN ANCHORS AS MANUFACTURED BY POWERS FASTENING, INC.
- 1/4"ø CRETE FLEX SS4 AS MANUFACTURED BY ELCO TEXTRON.

NOTES:
B.1) MINIMUM EMBEDMENT OF TAPCONS, MAXI-SET TAPCONS & CRETE-FLEX SS4 INTO CONCRETE BLOCK UNIT SHALL BE 1 1/4", AND FOR RED HEAD DYNABOLTS SHALL BE 1 1/2".
B.2) 1/4"ø x 7/8" CALK-IN ANCHORS SHALL BE ENTIRELY EMBEDDED INTO THE POURED CONCRETE. NO EMBEDMENT INTO STUCCO SHALL BE PERMITTED.
1/4" ø-20 SCREWS USED SHALL BE 1 1/2" LONG MINIMUM SHOULD STUCCO EXIST, AND 1" MINIMUM FOR WALLS WITH NO STUCCO.
B.3) IN CASE THAT PRECAST STONE, PRECAST CONCRETE PANELS, OR PAVERS BE FOUND ON THE EXISTING WALL OR FLOOR, ANCHORS SHALL BE LONG ENOUGH TO REACH THE MAIN STRUCTURE BEHIND SUCH PANELS. ANCHORAGE SHALL BE AS INDICATED ON NOTES B.1) & B.2) ABOVE.

(C) ANCHORS SHALL BE INSTALLED FOLLOWING ALL OF THE RECOMMENDATIONS AND SPECIFICATIONS OF THE ANCHOR'S MANUFACTURER.

8. IT SHALL BE THE RESPONSIBILITY OF THE CONTRACTOR TO VERIFY THE SOUNDNESS OF THE STRUCTURE WHERE SHUTTER IS TO BE ATTACHED TO INSURE PROPER ANCHORAGE.

9. BLADE (G), AND THE KNUCKLES FOR CENTERMATES (H)(H1),(I),(I1) & STARTER (E) ARE UNDER THE PATENT OF EASTERN METALS.

10. EACH UNIT MUST BEAR A PERMANENT LABEL IN A VISIBLE PLACE WITH A WARNING NOTE INSTRUCTING THE TENANT OR HOME OWNER THAT ALL LOCKING PINS, AS WELL AS CENTERMATE LOCKERS MUST BE PROPERLY INSTALLED & BOLTED DURING PERIODS OF HURRICANE WARNING.

11. A PERMANENT SHUTTER MANUFACTURER'S LABEL SHALL BE PLACED ON THE EXPOSED SURFACE OF THE FEMALE LOCK SLAT (COMPONENTS (I) OR (I1)).
ONE LABEL SHALL BE PLACED FOR EVERY OPENING. LABEL SHALL READ AS FOLLOWS:
"BIG BERTHA HI-RISE ACCORDION SHUTTER"
AMERICAN SHUTTER SYSTEM ASSOCIATION.
WEST PALM BEACH, FL.
MIAMI-DADE COUNTY PRODUCT CONTROL APPROVED.

12. (a) THIS PRODUCT APPROVAL DOCUMENT (P.A.D.) PREPARED BY THIS ENGINEER IS GENERIC AND DOES NOT PROVIDE INFORMATION FOR A SITE SPECIFIC PROJECT; i.e. WHERE THE SITE CONDITIONS DEVIATE FROM THE P.A.D.

(b) CONTRACTOR TO BE RESPONSIBLE FOR THE SELECTION, PURCHASE AND INSTALLATION OF THIS PRODUCT BASED ON THIS P.A.D. PROVIDED HE/SHE DOES NOT DEVIATE FROM THE CONDITIONS DETAILED ON THIS DOCUMENT.

(c) THIS PRODUCT APPROVAL DOCUMENT WILL BE CONSIDERED INVALID IF MODIFIED.

(d) SITE SPECIFIC PROJECTS SHALL BE PREPARED BY A FLORIDA REGISTERED ENGINEER OR ARCHITECT WHICH WILL BECOME THE PROFESSIONAL OF RECORD (P.O.R.) FOR THE PROJECT AND WHO WILL BE RESPONSIBLE FOR THE PROPER USE OF THE P.A.D. PROFESSIONAL OF RECORD, ACTING AS DELEGATED ENGINEER TO THE P.A.D. ENGINEER, SHALL SUBMIT TO THIS LATTER THE SITE SPECIFIC DRAWINGS FOR REVIEW.

(e) THIS P.A.D. SHALL BEAR THE DATE AND ORIGINAL SEAL AND SIGNATURE OF THE PROFESSIONAL ENGINEER THAT PREPARED IT.

PRODUCT REVISED
as complying with the Florida Buiding Code
Acceptance No 04-0524.01
Expiration Date 10/19/2006
By Helena A. Melen
Miami Dade Product Control Division

3/1/04

F.B.C.(H.V.H.Z.)/MIAMI-DADE COUNTY

TILTECO INC.
TILLIT TESTING & ENGINEERING COMPANY
6595 N.W. 36th. St., Ste. 217, VIRGINIA GARDENS, FL 33166
Phone : (305)871-1530 . Fax : (305)871-1531
EB-0006719
WALTER A. TILLIT Jr. P. E.
FLORIDA Lic. # 44167

ASSA / BIG BERTHA HI-RISE ACCORDION SHUTTER

ROLLINGSHIELD, INC.
(ASSA # 19)
2500 N.W. 74th AVENUE
MIAMI, FL 33122

REV. No	DESCRIPTION	DATE	REV. No	DESCRIPTION	DATE
1	OLD 01-101	2/27/04	3		
2			4		

AS SHOWN
SCALE
2/27/04
DATE
04-023
DRAWING No
SHEET 1 OF 10

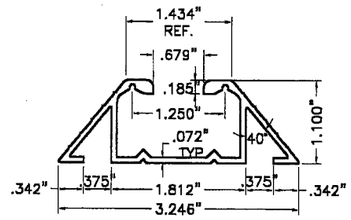

(C1) THRESHOLD SILL

SCALE: 1/2"=1"

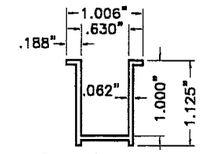

(C2) TRENCH THRESHOLD SILL

SCALE: 1/2"=1"

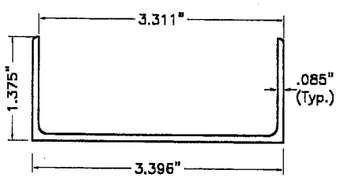

(D) SILL ADAPTOR

SCALE: 1/2"=1"

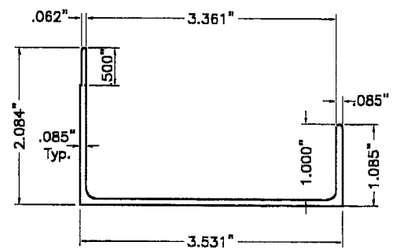

(D') ALTERNATE SILL ADAPTOR

SCALE: 1/2"=1"

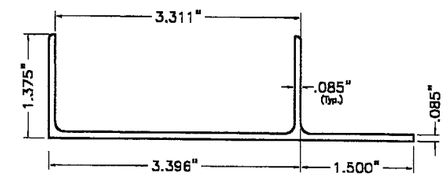

(D1) SILL ADAPTOR W / LIP

SCALE: 1/2"=1"

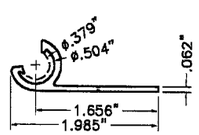

(E) 180° STARTER

SCALE: 1/2"=1"

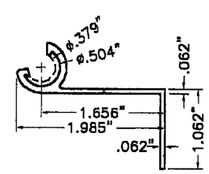

(E1) 90° STARTER

SCALE: 1/2"=1"

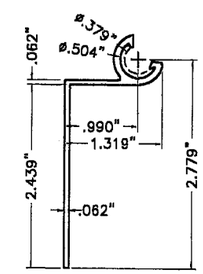

(E2) 90° STARTER

SCALE: 1/2"=1"

PRODUCT REVISED
as complying with the Florida Buiding Code
Acceptance No 04-0524.01
Expiration Date 10/19/2006
By Helmy A. Nolan
Miami Dade Product Control Division

COMPONENTS

3/1/04

F.B.C.(H.V.H.Z.)/MIAMI-DADE COUNTY

TILTECO INC.
TILLIT TESTING & ENGINEERING COMPANY
6595 N.W. 36th. St., Ste. 217, VIRGINIA GARDENS, Fl. 33166
Phone : (305)871-1530 . Fax : (305)871-1531
EB-0006719
WALTER A. TILLIT Jr. P. E.
FLORIDA Lic. # 44167

ASSA / BIG BERTHA HI-RISE ACCORDION SHUTTER

ROLLINGSHIELD, INC.
(ASSA # 19)
2500 N.W. 74th AVENUE
MIAMI, FL 33122

REV. No	DESCRIPTION	DATE	REV. No	DESCRIPTION	DATE
1	OLD 01-101	2/27/04	3		
2			4		

AS SHOWN
SCALE

2/27/04
DATE

04-023
DRAWING No

SHEET 1A OF 10

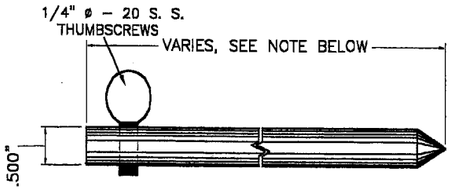

(F) LOCKING PIN

SCALE: 1/2"=1"

6" Min. FOR UP TO 9'–0" SHUTTER BLADE LENGTHS, AND FOR SHUTTER BLADE LENGTHS GREATER THAN OR EQUAL TO 9'–1" INCREASE LOCKING PIN'S LENGTH BY 7/8" FOR EVERY 6" INCREASE ON SHUTTER BLADE'S LENGTH.

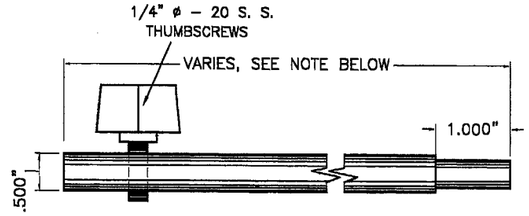

(F1) ALTERNATE LOCKING PIN

SCALE: 1/2"=1"

6" Min. FOR UP TO 9'–0" SHUTTER BLADE LENGTHS, AND FOR SHUTTER BLADE LENGTHS GREATER THAN OR EQUAL TO 9'–1" INCREASE LOCKING PIN'S LENGTH BY 7/8" FOR EVERY 6" INCREASE ON SHUTTER BLADE'S LENGTH.

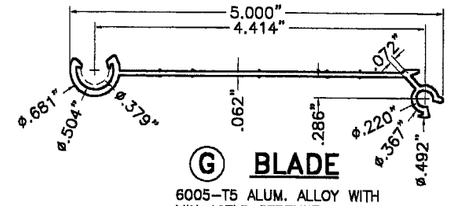

(G) BLADE

6005–T5 ALUM. ALLOY WITH MIN. YIELD STRENGTH=41.62 ksi.

SCALE: 1/2"=1"

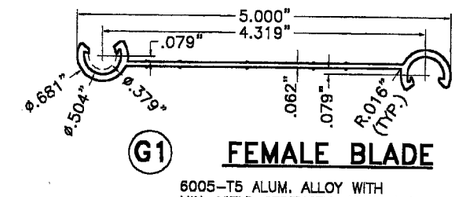

(G1) FEMALE BLADE

6005–T5 ALUM. ALLOY WITH MIN. YIELD STRENGTH=41.62 ksi.

SCALE: 1/2"=1"

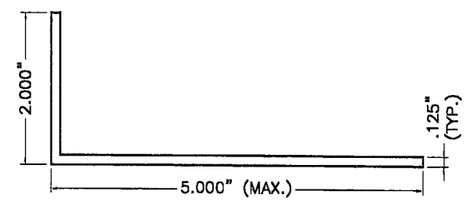

(L1) ALUMINUM ANGLE

SCALE: 1/2"=1"

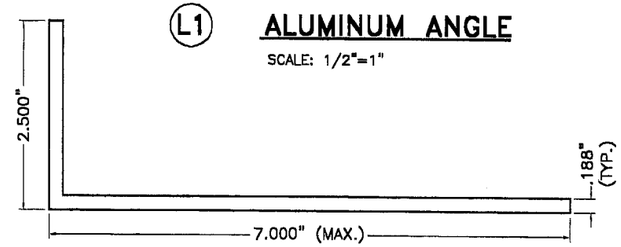

(L2) ALUMINUM ANGLE

SCALE: 1/2"=1"

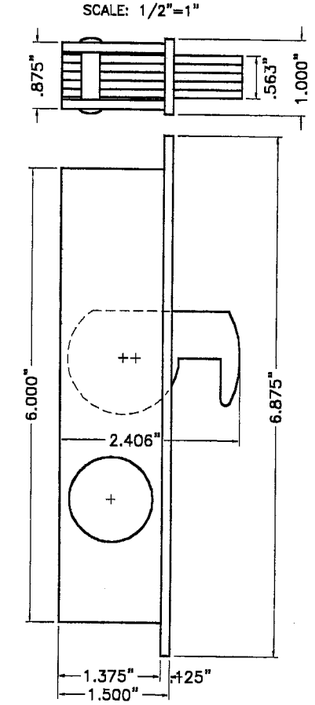

(N) LOCK FOR (H1) & (I1)

GALVANIZED STEEL

SCALE: 1/2" = 1"

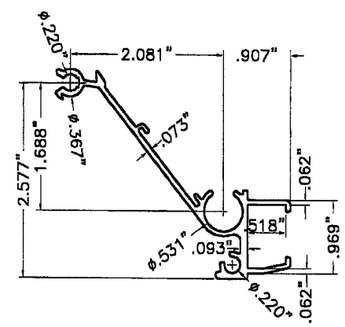

(H) MALE LOCK SLAT

SCALE: 1/2"=1"

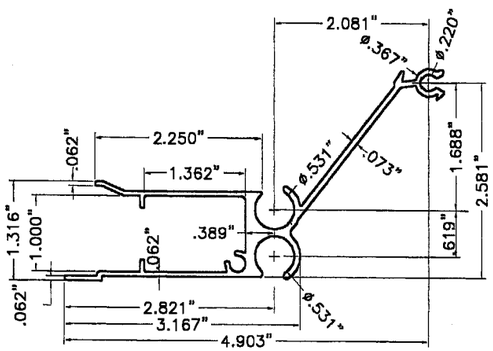

(I) FEMALE LOCK SLAT

SCALE: 1/2"=1"

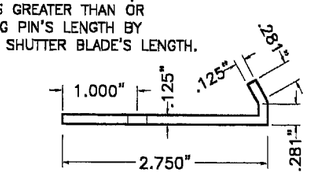

PLAN

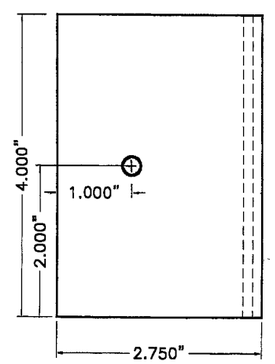

ELEVATION

(J) OUTSIDE or INSIDE LOCKER LOCKER FOR (H) & (I)

SCALE: 1/2"=1"

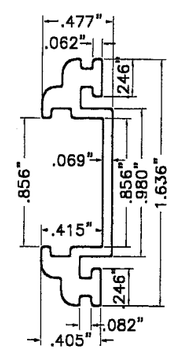

(K) CENTERMATE LOCKING STYLE, FOR (H1) & (I1) x 7" LONG.

6063–T5 AL. ALLOY

SCALE: 1" = 1"

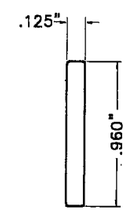

(M) .960"x.125" BAR x 7" LONG FOR (H1) & (I1)

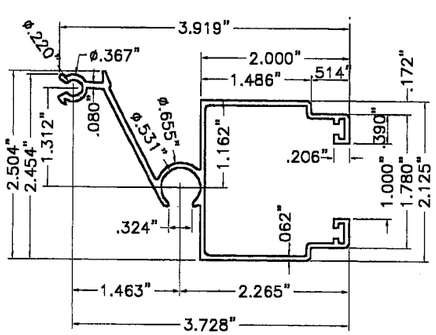

(H1) HEAVY MALE LOCK SLAT

SCALE: 1/2"=1"

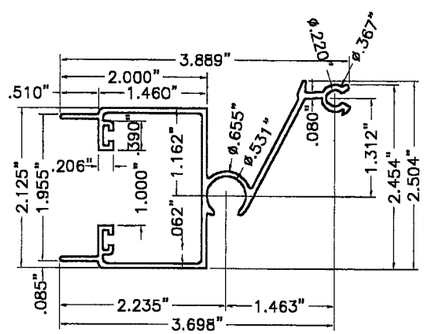

(I1) HEAVY FEMALE LOCK SLAT

SCALE: 1/2"=1"

PRODUCT REVISED
as complying with the Florida Buiding Code
Acceptance No 04-0524.01
Expiration Date 10/19/2006
By [signature]
Miami Dade Product Control Division

COMPONENTS

3/1/04

F.B.C.(H.V.H.Z.)/MIAMI–DADE COUNTY

TILTECO INC.
TILLIT TESTING & ENGINEERING COMPANY
6595 N.W. 36th. St., Ste. 217, VIRGINIA GARDENS, FL 33166
Phone : (305)871–1530 . Fax : (305)871–1531
EB–0006719
WALTER A. TILLIT, Jr. P. E.
FLORIDA Lic. # 44167

ASSA / BIG BERTHA HI–RISE ACCORDION SHUTTER

ROLLINGSHIELD, INC.
(ASSA # 19)
2500 N.W. 74th AVENUE
MIAMI, FL 33122

REV. No	DESCRIPTION	DATE	REV. No	DESCRIPTION	DATE
1	OLD 01–101	2/27/04	3		
2			4		

AS SHOWN
SCALE

2/27/04
DATE

04–023
DRAWING No

SHEET 2 OF 10

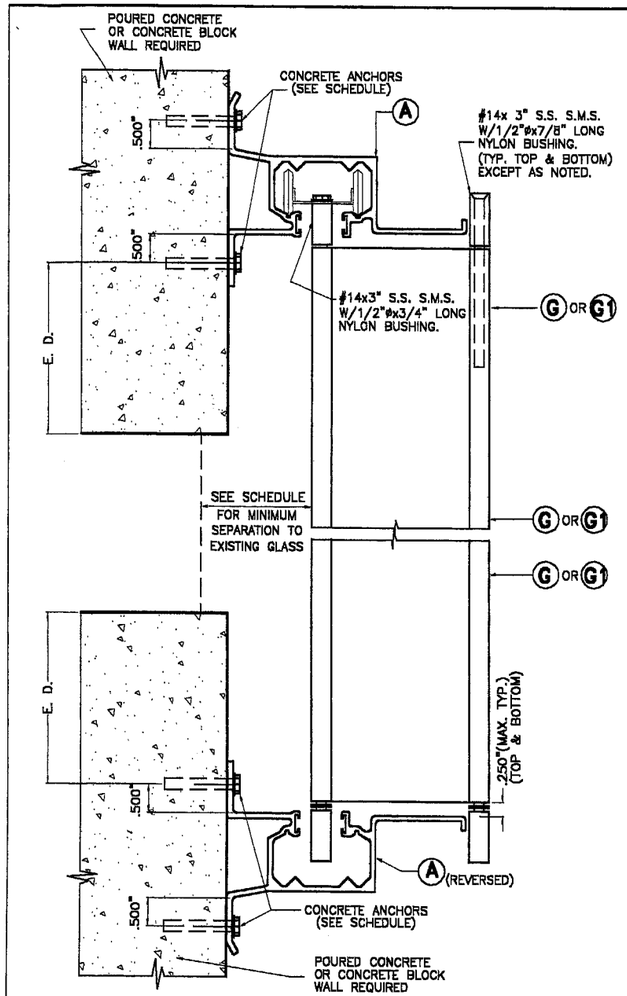

WALL MOUNTING INSTALLATION SECTION A

SCALE: 3/8" = 1"

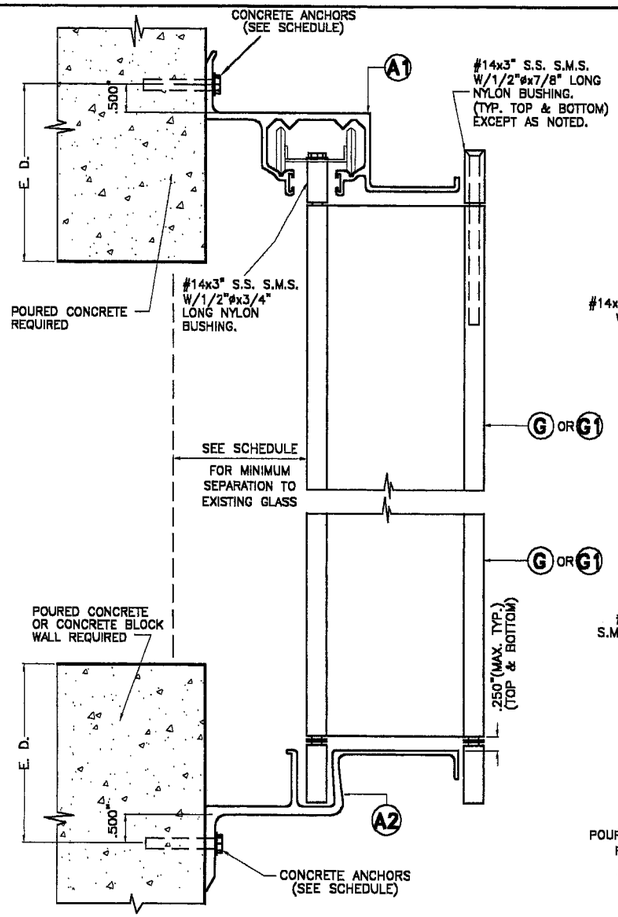

WALL MOUNTING INSTALLATION SECTION A1

SCALE: 3/8" = 1"

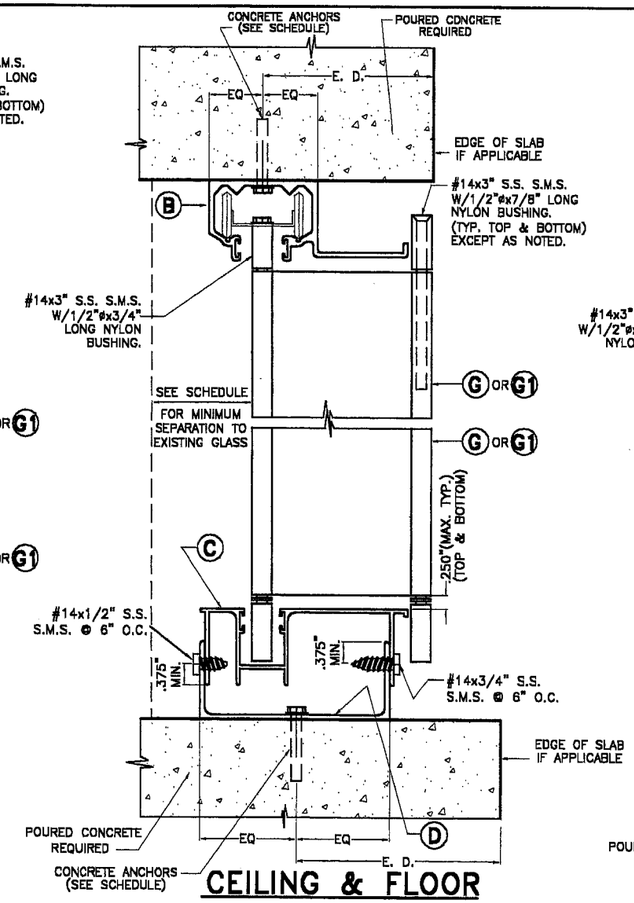

CEILING & FLOOR MOUNTING INSTALLATION SECTION B

SCALE: 3/8" = 1"

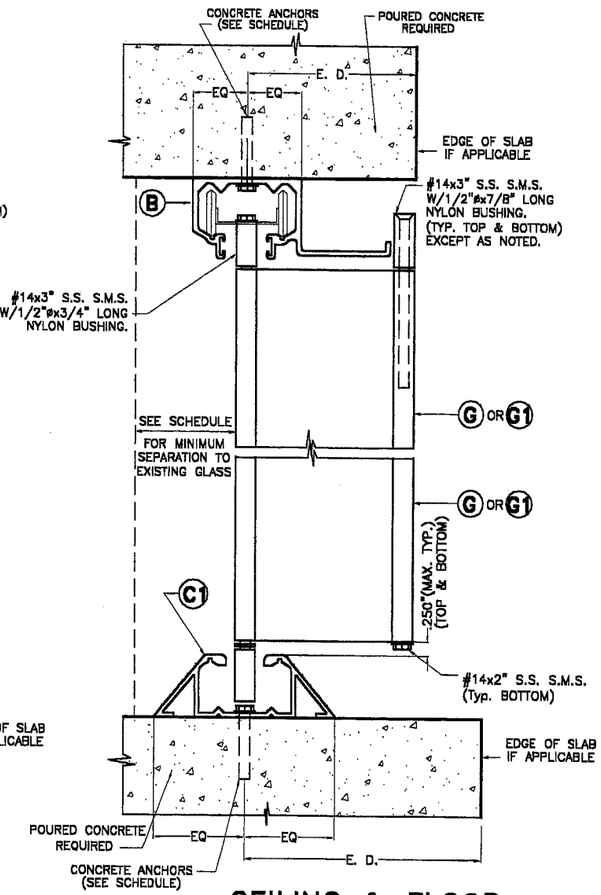

CEILING & FLOOR MOUNTING INSTALLATION SECTION B2

SCALE: 3/8" = 1"

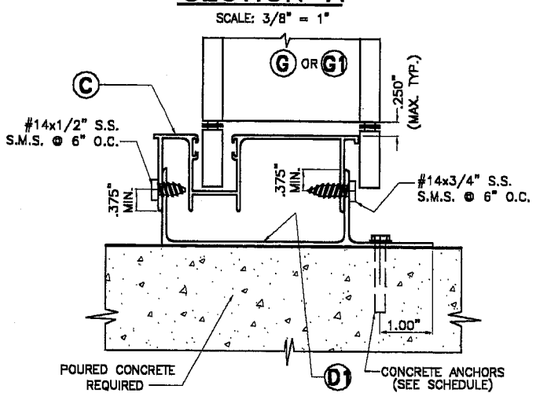

REMOVABLE FLOOR MOUNTING INSTALLATION – SECTION B1

SCALE: 3/8" = 1"

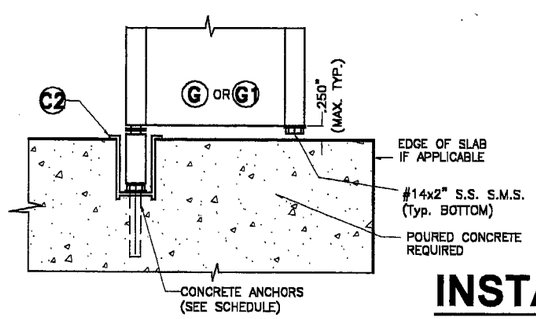

REMOVABLE FLOOR MOUNTING INSTALLATION – SECTION B2A

SCALE: 3/8" = 1"

INSTALLATION DETAILS

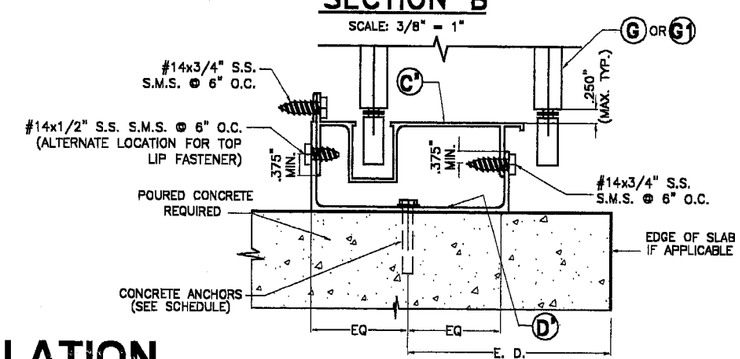

SECTION B (ALTERNATE)

E. D. = EDGE DISTANCE (SEE SCHEDULE ON SHEET 8 OF 10)

3/1/04

PRODUCT REVISED
as complying with the Florida Buiding Code
Acceptance No 04-0524.01
Expiration Date 10/19/2006
By Helena A. Martin
Miami Dade Product Control Division

F.B.C.(H.V.H.Z.)/MIAMI-DADE COUNTY

TILTECO INC.
TILLIT TESTING & ENGINEERING COMPANY
8595 N.W. 38th. St., Ste. 217, VIRGINIA GARDENS, FL 33166
Phone : (305)871-1530 . Fax : (305)871-1531
EB-0006719
WALTER A. TILLIT Jr. P. E.
FLORIDA Lic. # 44167

ASSA / BIG BERTHA HI-RISE ACCORDION SHUTTER

ROLLINGSHIELD, INC.
(ASSA # 19)
2500 N.W. 74th AVENUE
MIAMI, FL 33122

REV. No	DESCRIPTION	DATE	REV. No	DESCRIPTION	DATE
1	OLD 01-101	2/27/04	3		
2			4		

AS SHOWN
SCALE
2/27/04
DATE
04-023
DRAWING No
SHEET 3 OF 10

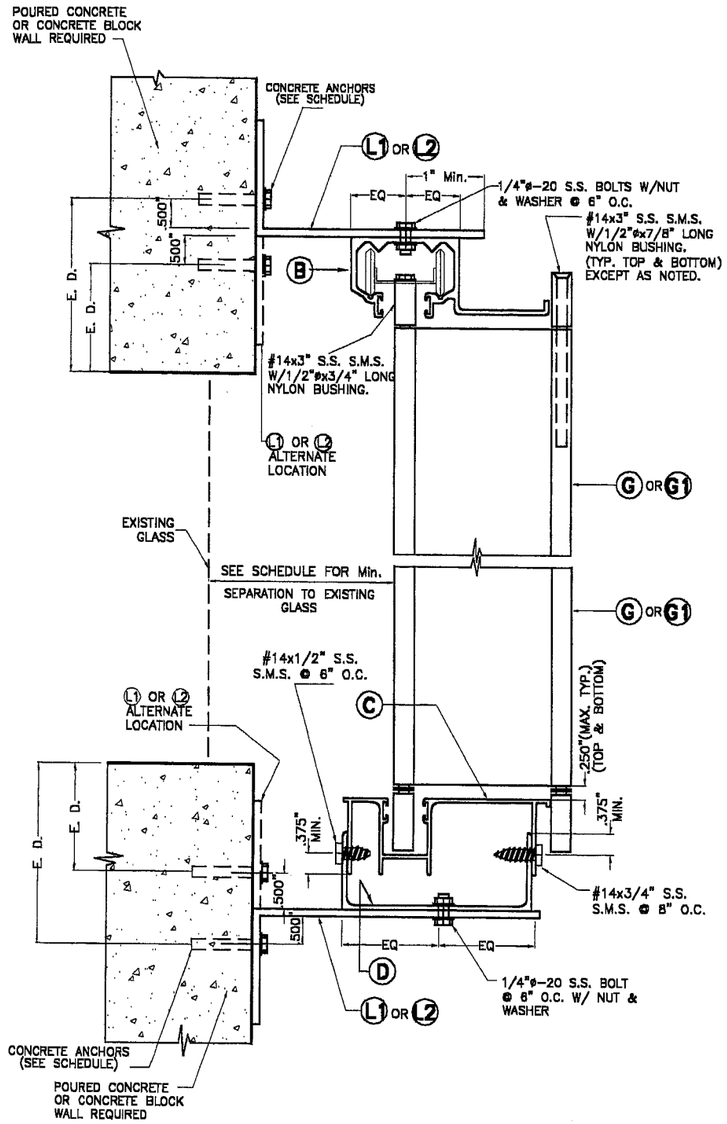

BUILD-OUT INSTALLATION
- SECTION C

SCALE: 3/8" = 1"

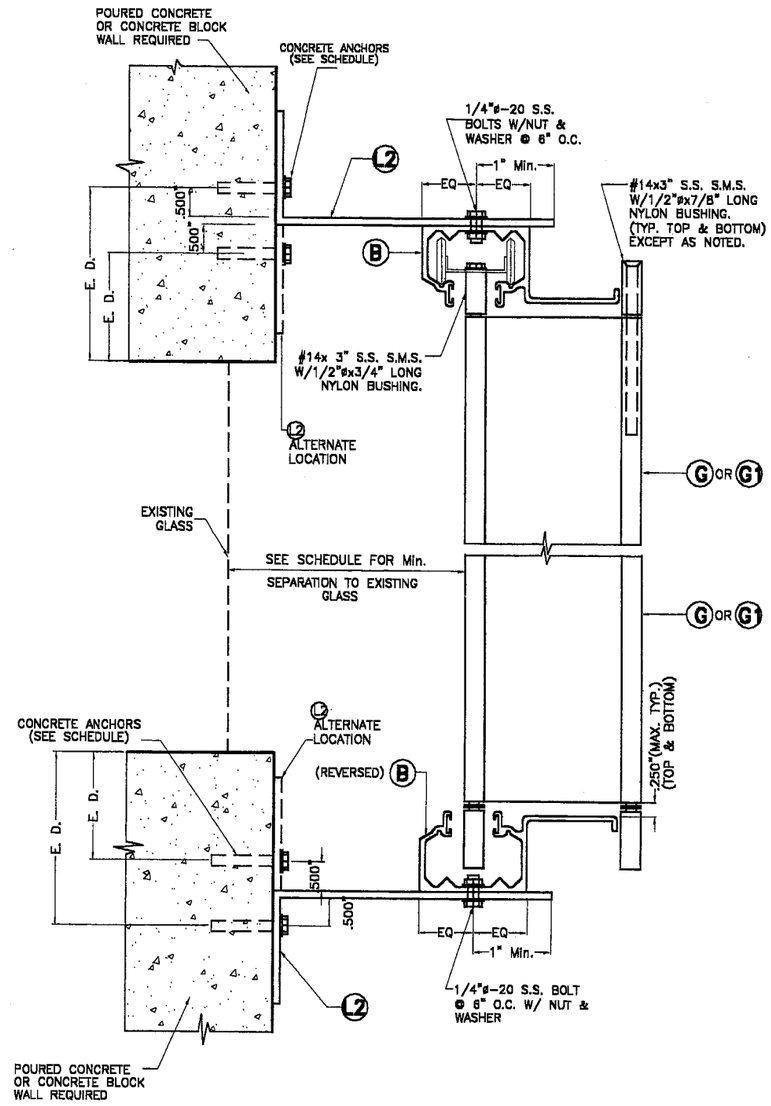

ALTERNATE BUILD-OUT INSTALLATION
- SECTION C1

SCALE: 3/8" = 1

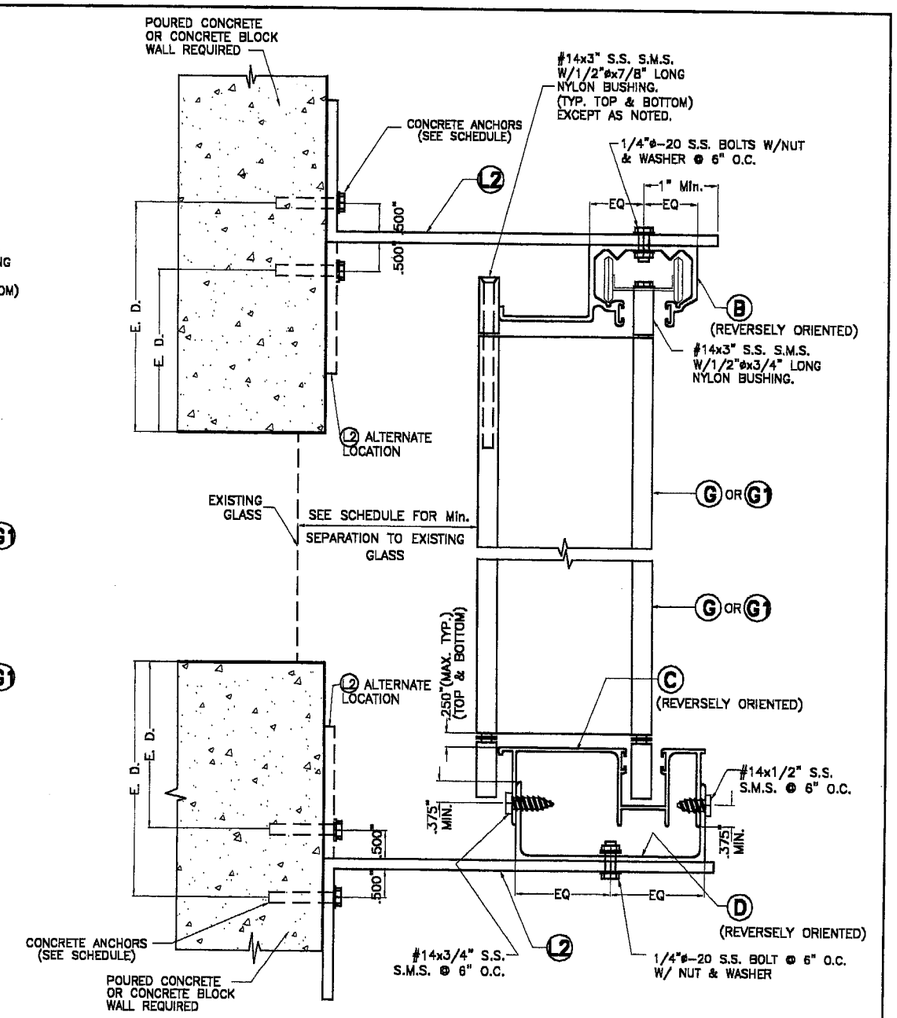

WALL MOUNTING INSTALLATION
- SECTION A2

SCALE: 3/8" = 1"

PRODUCT REVISED
as complying with the Florida Buiding Code
Acceptance No 04-0524.01
Expiration Date 10/19/2006
By Helena A. Molina
Miami Dade Product Control Division

E. D. = EDGE DISTANCE (SEE SCHEDULE ON SHEET 8 & 9 OF 10)

INSTALLATION DETAILS

3/11/04

F.B.C.(H.V.H.Z.)/MIAMI-DADE COUNTY

TILTECO INC.
TILLIT TESTING & ENGINEERING COMPANY
6595 N.W. 36th. St., Ste. 217, VIRGINIA GARDENS, FL 33166
Phone : (305)871-1530 . Fax : (305)871-1531
EB-0006719
WALTER A. TILLIT Jr. P. E.
FLORIDA Lic. # 44167

ASSA / BIG BERTHA HI-RISE ACCORDION SHUTTER

ROLLINGSHIELD, INC.
(ASSA # 19)
2500 N.W. 74th AVENUE
MIAMI, FL 33122

REV. No	DESCRIPTION	DATE	REV. No	DESCRIPTION	DATE
1	OLD 01-101	2/27/04	3		
2			4		

AS SHOWN
SCALE

2/27/04
DATE

04-023
DRAWING No

SHEET 4 OF 10

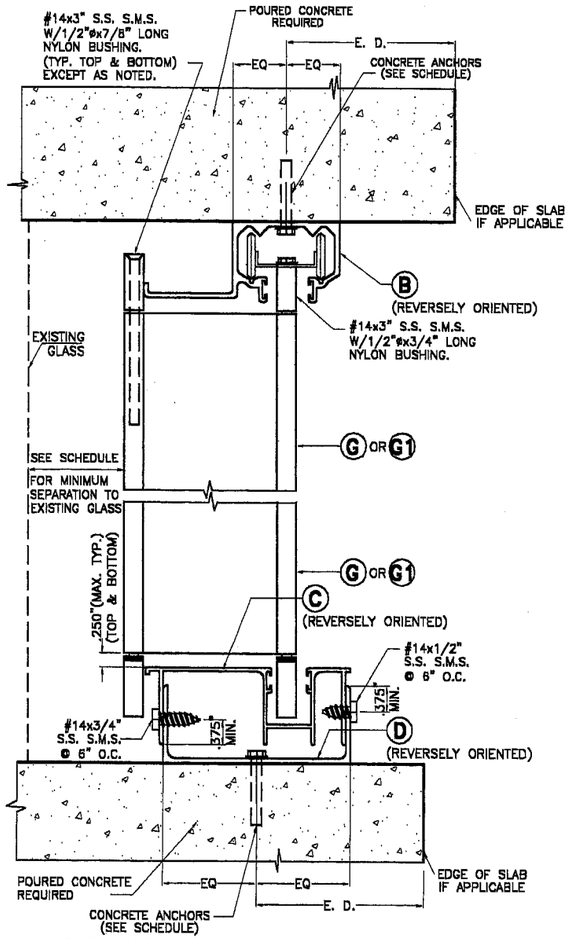

CEILING & FLOOR MOUNTING INSTALLATION – SECTION B3

SCALE: 3/8" = 1"

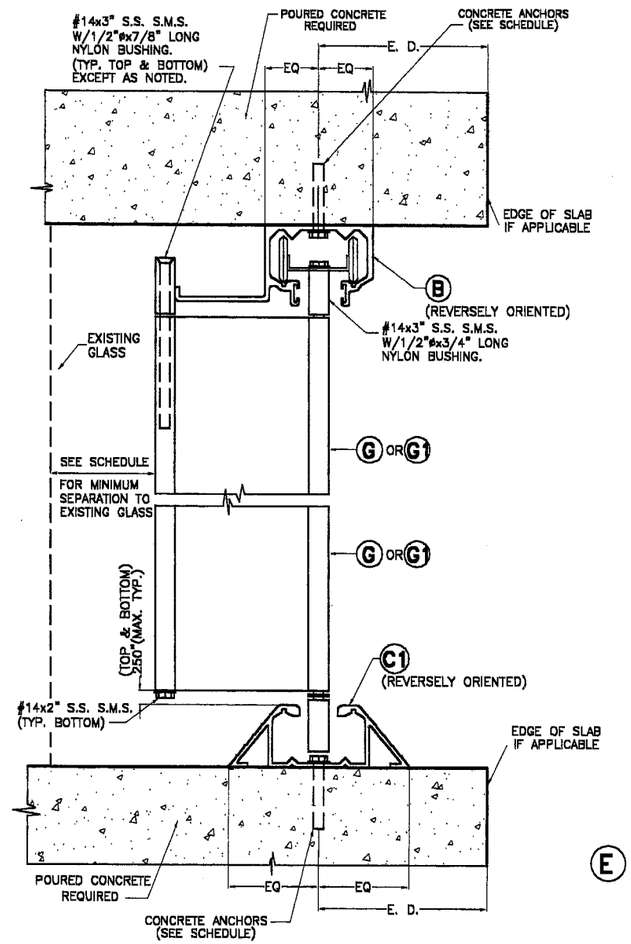

CEILING & FLOOR MOUNTING INSTALLATION – SECTION B5

SCALE: 3/8" = 1"

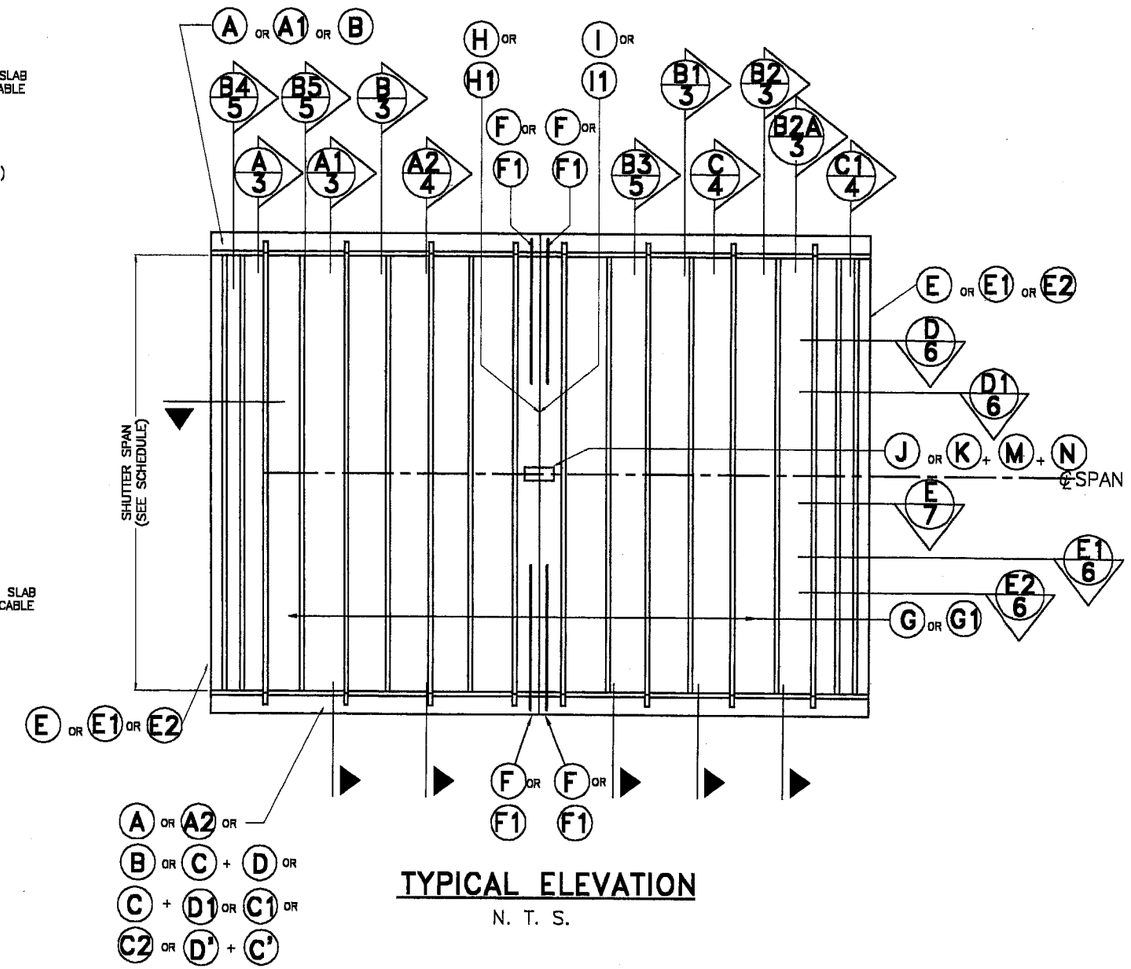

TYPICAL ELEVATION

N. T. S.

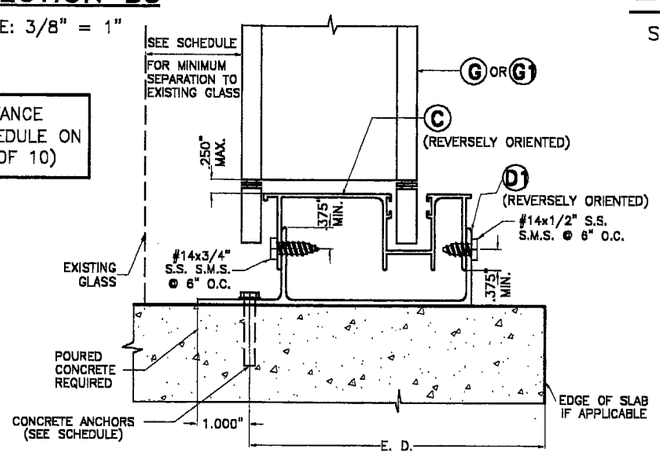

CEILING & FLOOR MOUNTING INSTALLATION – SECTION B4

SCALE: 3/8" = 1"

E. D. = EDGE DISTANCE (SEE SCHEDULE ON SHEET 9 OF 10)

INSTALLATION DETAILS

PRODUCT REVISED
as complying with the Florida
Buiding Code
Acceptance No 04-0524.01
Expiration Date 10/19/2006
By Helena A. Molina
Miami Dade Product Control
Division

3/1/04

F.B.C.(H.V.H.Z.)/MIAMI-DADE COUNTY

TILTECO INC.
TILLIT TESTING & ENGINEERING COMPANY
6595 N.W. 36th. St., Ste. 217, VIRGINIA GARDENS, FL 33166
Phone : (305)871-1530 . Fax : (305)871-1531
EB-0006719
WALTER A. TILLIT, Jr. P. E.
FLORIDA Lic. # 44167

ASSA / BIG BERTHA HI-RISE ACCORDION SHUTTER

ROLLINGSHIELD, INC.
(ASSA # 19)
2500 N.W. 74th AVENUE
MIAMI, FL 33122

REV. No	DESCRIPTION	DATE	REV. No	DESCRIPTION	DATE
1	OLD 01-101	2/27/04	3		
2			4		

AS SHOWN
SCALE

2/27/04
DATE

04-023
DRAWING No

SHEET 5 OF 10

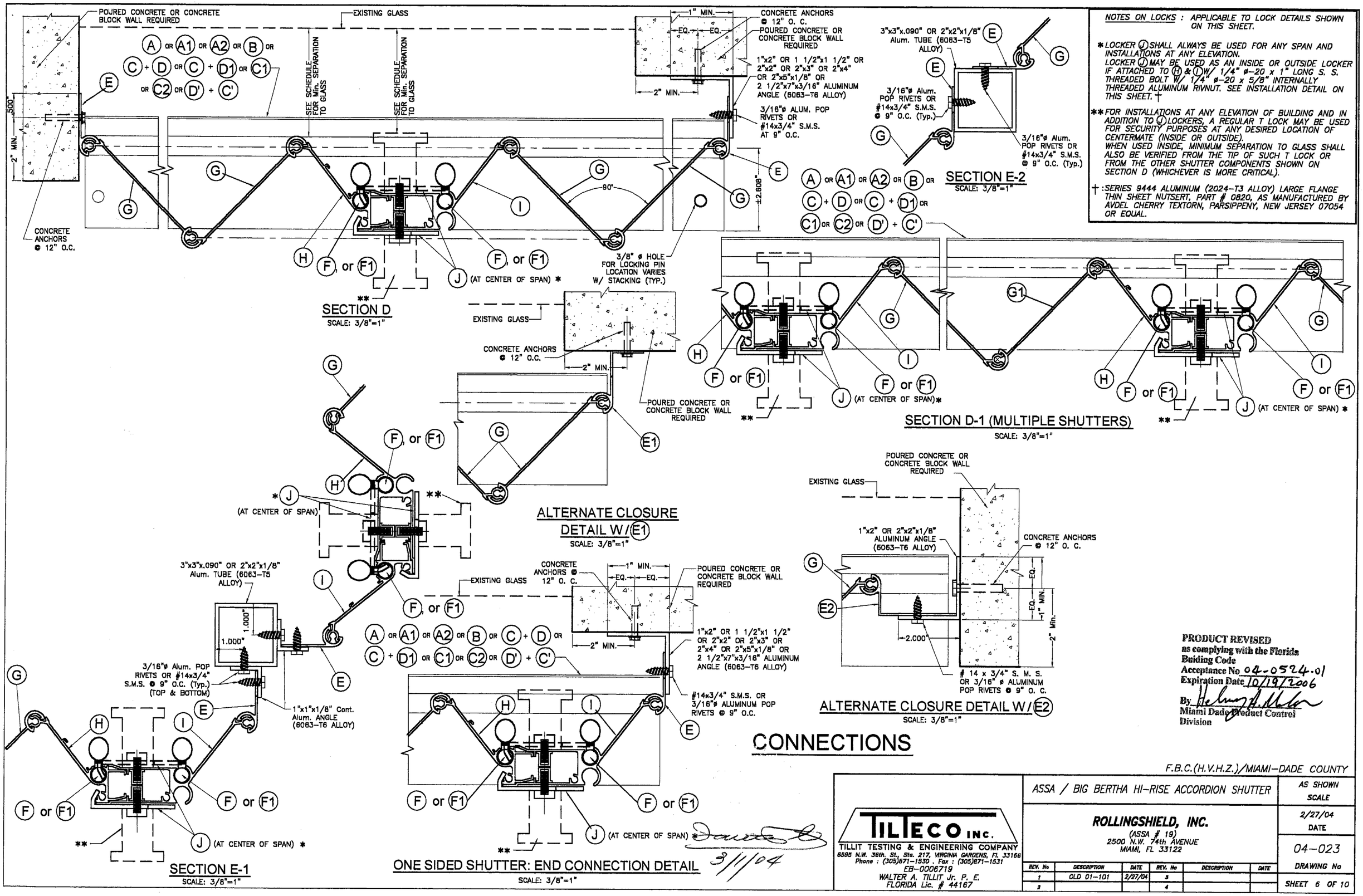

NOTES ON LOCKS : APPLICABLE TO LOCK DETAILS SHOWN ON THIS SHEET.

* LOCKER (J) SHALL ALWAYS BE USED FOR ANY SPAN AND INSTALLATIONS AT ANY ELEVATION. LOCKER (J) MAY BE USED AS AN INSIDE OR OUTSIDE LOCKER IF ATTACHED TO (H) & (I) W/ 1/4" ø-20 x 1" LONG S. S. THREADED BOLT W/ 1/4" ø-20 x 5/8" INTERNALLY THREADED ALUMINUM RIVNUT. SEE INSTALLATION DETAIL ON THIS SHEET. †

** FOR INSTALLATIONS AT ANY ELEVATION OF BUILDING AND IN ADDITION TO (J) LOCKERS, A REGULAR T LOCK MAY BE USED FOR SECURITY PURPOSES AT ANY DESIRED LOCATION OF CENTERMATE (INSIDE OR OUTSIDE). WHEN USED INSIDE, MINIMUM SEPARATION TO GLASS SHALL ALSO BE VERIFIED FROM THE TIP OF SUCH T LOCK OR FROM THE OTHER SHUTTER COMPONENTS SHOWN ON SECTION D (WHICHEVER IS MORE CRITICAL).

† : SERIES 9444 ALUMINUM (2024-T3 ALLOY) LARGE FLANGE THIN SHEET NUTSERT, PART # 0820, AS MANUFACTURED BY AVDEL CHERRY TEXTORN, PARSIPPENY, NEW JERSEY 07054 OR EQUAL.

CONNECTIONS

PRODUCT REVISED
as complying with the Florida Buiding Code
Acceptance No 04-0524.01
Expiration Date 10/19/2006
By [signature]
Miami Dade Product Control Division

F.B.C.(H.V.H.Z.)/MIAMI-DADE COUNTY

TILTECO INC.
TILLIT TESTING & ENGINEERING COMPANY
6595 N.W. 36th. St., Ste. 217, VIRGINIA GARDENS, FL 33166
Phone : (305)871-1530 . Fax : (305)871-1531
EB-0006719
WALTER A. TILLIT Jr. P. E.
FLORIDA Lic. # 44167

ASSA / BIG BERTHA HI-RISE ACCORDION SHUTTER

ROLLINGSHIELD, INC.
(ASSA # 19)
2500 N.W. 74th AVENUE
MIAMI, FL 33122

REV. No	DESCRIPTION	DATE	REV. No	DESCRIPTION	DATE
1	OLD 01-101	2/27/04	3		
2			4		

AS SHOWN
SCALE
2/27/04
DATE
04-023
DRAWING No
SHEET 6 OF 10

[signature] 3/1/04

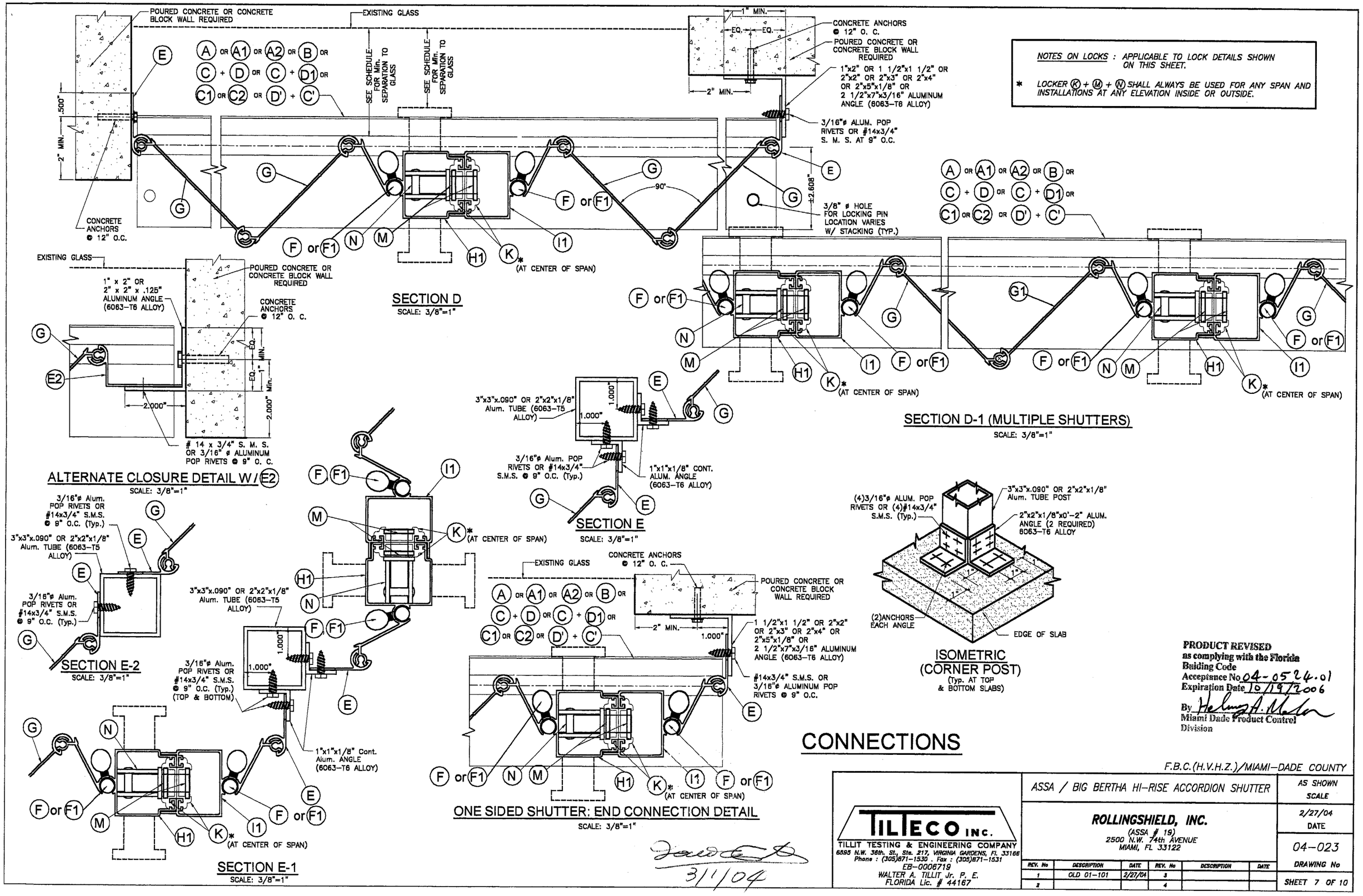

NOTES ON LOCKS : APPLICABLE TO LOCK DETAILS SHOWN ON THIS SHEET.

* LOCKER (K) + (M) + (N) SHALL ALWAYS BE USED FOR ANY SPAN AND INSTALLATIONS AT ANY ELEVATION INSIDE OR OUTSIDE.

SECTION D-1 (MULTIPLE SHUTTERS)
SCALE: 3/8"=1"

CONNECTIONS

PRODUCT REVISED
as complying with the Florida Baiding Code
Acceptance No 04-0524.01
Expiration Date 10/19/2006
By [signature]
Miami Dade Product Control Division

F.B.C.(H.V.H.Z.)/MIAMI-DADE COUNTY

TILTECO INC.
TILLIT TESTING & ENGINEERING COMPANY
6595 N.W. 36th. St., Ste. 217, VIRGINIA GARDENS, FL 33166
Phone : (305)871-1530 . Fax : (305)871-1531
EB-0006719
WALTER A. TILLIT Jr. P. E.
FLORIDA Lic. # 44167

ASSA / BIG BERTHA HI-RISE ACCORDION SHUTTER

ROLLINGSHIELD, INC.
(ASSA # 19)
2500 N.W. 74th AVENUE
MIAMI, FL 33122

REV. No	DESCRIPTION	DATE	REV. No	DESCRIPTION	DATE
1	OLD 01-101	2/27/04	3		
2			4		

AS SHOWN
SCALE
2/27/04
DATE
04-023
DRAWING No
SHEET 7 OF 10

[signature]
3/1/04

MAXIMUM DESIGN PRESSURE RATING "W" (p.s.f.) AND CORRESPONDING MAXIMUM SPAN "L" SCHEDULE.

(VALID FOR SECTIONS A, A1, B, B1, B2, B2A, C & C1 ON SHEET 3 & 4).

NOTE:
DESIGN PRESSURE RATING CORRESPONDS ONLY TO NEGATIVE PRESSURE (SUCTION) LOADS, IN ACCORDANCE WITH ASCE 7-98 CRITERIA FOR A GIVEN OPENING. IF NEGATIVE PRESSURE VALUES COMPLY WITH THE REQUIRED PRESSURE FOR THE OPENING, THE POSITIVE PRESSURE WILL AUTOMATICALLY QUALIFY AND NEED NOT TO BE CHECKED.

MAXIMUM DESIGN LOAD "W" (p.s.f.)	MAXIMUM SHUTTER SPAN FOR SECTIONS "L" (ft.)			MINIMUM SEPARATION TO GLASS (in.) ALL SECTIONS	
	A, B, B1, C & C1	A1	B2, B2A	*	**
40	16'-0"	16'-0"	16'-0"	3"	3"
45	15'-11"	15'-11"	15'-11"	3"	3"
50	15'-6"	15'-6"	15'-1"	3"	3"
55	15'-1"	15'-1"	14'-4"	3"	3"
60	14'-9"	14'-9"	13'-9"	3"	3"
65	14'-6"	14'-6"	13'-3"	3"	3"
70	14'-3"	13'-11"	12'-9"	3"	3"
75	14'-0"	13'-6"	12'-4"	3"	3"
80	13'-9"	13'-1"	11'-11"	3"	3"
85	13'-5"	12'-8"	11'-7"	3"	3"
90	13'-1"	12'-4"	11'-3"	3"	3"
95	12'-9"	12'-0"	10'-11"	3"	3"
100	12'-5"	11'-8"	10'-8"	3"	3"
105	12'-1"	11'-5"	10'-5"	3"	3"
110	11'-10"	11'-1"	10'-2"	3"	3"
115	11'-7"	10'-11"	9'-11"	3"	3"
120	11'-4"	10'-8"	9'-9"	3"	3"
125	11'-1"	10'-5"	9'-6"	3"	3"
130	10'-11"	10'-3"	9'-4"	3"	3"
135	10'-8"	10'-0"	9'-2"	3"	3"
140	10'-6"	9'-10"	9'-0"	3"	3"
145	10'-4"	9'-8"	8'-8"	3"	3"
150	10'-2"	9'-6"	8'-5"	3"	3"
155	10'-0"	9'-4"	8'-2"	3"	3"
160	9'-10"	9'-3"	7'-10"	3"	3"
165	9'-8"	9'-1"	7'-8"	3"	3"
170	9'-6"	8'-11"	7'-5"	3"	3"
175	9'-5"	8'-8"	7'-2"	3"	3"
180	9'-3"	8'-5"	7'-0"	3"	3"
185	9'-1"	8'-2"	6'-10"	3 1/2"	3"
190	8'-11"	7'-11"	6'-8"	3 1/2"	3"
195	8'-8"	7'-9"	6'-6"	3 1/2"	3"
200	8'-5"	7'-7"	6'-4"	3 1/2"	3"
205	8'-3"	7'-5"	6'-2"	3 1/2"	3"
210	8'-0"	7'-2"	6'-0"	3 1/2"	3"
215	7'-10"	7'-0"	5'-10"	3 1/2"	3"
220	7'-8"	6'-10"	5'-9"	3 1/2"	3"
225	7'-6"	6'-9"	5'-7"	3 1/2"	3"
230	7'-4"	6'-7"	5'-6"	3 1/2"	3"

* FOR SHUTTERS INSTALLED WITHIN THE FIRST 30'-0" ELEVATION OF BUILDING MEASURED AT BOTTOM OF SHUTTER.

** FOR SHUTTERS INSTALLED ABOVE 30'-0" ELEVATION OF BUILDING, MEASURED AT BOTTOM OF SHUTTER.

(SEE ANCHORS LEGEND BELOW.)

MAXIMUM DESIGN PRESSURE RATING "W" (p.s.f.) AND CORRESPONDING MAXIMUM ANCHOR SPACING (in.) SCHEDULE. +

(VALID FOR SECTIONS A, B, B1, C & C1 ON SHEET 3 & 4).

MAXIMUM DESIGN LOAD "W" (p.s.f.)	WALL MOUNTING INSTALLATION AT TOP OR BOTTOM (TO CONCRETE) SECTIONS A, C & C1 — SHUTTER SPAN			WALL MOUNTING INSTALLATION AT TOP OR BOTTOM (TO MASONRY) SECTIONS A, C & C1 — SHUTTER SPAN			FLOOR/CEILING MOUNTING INSTALLATION TOP OR BOTTOM (TO CONCRETE) SECTIONS B & B1 — SHUTTER SPAN		
	5'-0" OR LESS	5'-0" TO 8'-6"	8'-6" TO MAX. ALLOWED	5'-0" OR LESS	5'-0" TO 8'-6"	8'-6" TO MAX. ALLOWED	5'-0" OR LESS	5'-0" TO 8'-6"	8'-6" TO MAX. ALLOWED
FROM 40.0 TO 60.0	6	6	6	6	6	3.5	6	6	6
	6	6	6	6	6	6	6	6	6
	6	6	6	6	6	6	6	6	6
	6	6	6	6	6	5.0	6	6	6
	6	6	6	6	6	6	6	6	6
FROM 60.0 TO 75.0	6	6	6	6	6	–	6	6	5.0
	6	6	6	6	6	4.5	6	6	5.6
	6	6	6	6	6	5.5	6	6	6
	6	6	6	6	6	4.5	6	6	5.0
	6	6	6	6	6	5.0	6	6	6
FROM >75.0 TO 90.0	6	6	6	6	4.5	–	6	6	4.5
	6	6	6	6	6	4.0	6	6	5.0
	6	6	6	6	6	5.0	6	6	6
	6	6	6	6	6	3.0	6	6	4.5
	6	6	6	6	6	4.5	6	6	5
FROM 90.0 TO 120.0	6	6	5	6	–	–	6	5	4
	6	6	5	6	5	–	6	6	4.5
	6	6	6	6	5.5	–	6	6	5.5
	6	6	5	6	4	2.5	6	5	4
	6	6	6	6	5.5	3.5	6	6	5.5
FROM 120.0 TO 170.0	6	4.5	4	3.5	–	–	6	3.5	3
	6	4.5	4	6	–	–	6	4	–
	6	5.5	4.5	6	3.5	3	6	5	4.5
	6	4.5	4	5	2.5	–	6	3.5	3
	6	6	5	6	3	3	6	5	4.5
FROM 170.0 TO 230.0	6	3.5	3.5	–	–	–	4	3	3
	6	–	–	4	–	–	5	–	–
	6	4.5	4.5	5	–	–	6	–	–
	6	3.5	3.5	3	–	–	4.5	3	3
	6	5	5	4.5	–	–	6	4.5	4.5

+ MAXIMUM ANCHOR SPACINGS ARE VALID FOR 3 1/2" EDGE DISTANCE. FOR E. D. LESS THAN 3 1/2", REDUCE ANCHOR SPACING BY MULTIPLYING SPACING SHOWN ON SCHEDULE BY THE FOLLOWING FACTORS. (NOTE : Min. E. D. FOR CALK-IN ANCHORS IS 2 1/2"). REDUCED SPACING OBTAINED USING FACTOR SHALL NOT BE LESS THAN MINIMUM SPACING INDICATED FOR EACH ANCHOR TYPE AT ANCHORS LEGEND.

ACTUAL E. D.	FACTOR
3"	.86
2 1/2"	.75
2"	.50

ANCHORS LEGEND

ANCHORS TYPE	ANCHOR MIN. SPACING
TAPCON OR MAXI-SET TAPCONS	3.0"
5/16"øRED HD DYNABOLT SLEEVE	3.75"
3/8"øRED HD DYNABOLT SLEEVE	4.5"
CALK-IN	2.5"
CRETE-FLEX SS4	3.0"

3/1/04

(SEE ANCHORS LEGEND BELOW.)

MAXIMUM DESIGN PRESSURE RATING "W" (p.s.f.) AND CORRESPONDING MAXIMUM ANCHOR SPACING (in.) SCHEDULE. +

(VALID FOR SECTION A1 ON SHEET 3).

MAXIMUM DESIGN LOAD "W" (p.s.f.)	WALL MOUNTING INSTALLATION AT TOP (TO CONCRETE) — SHUTTER SPAN			WALL MOUNTING INSTALLATION AT BOTTOM (TO CONCRETE OR MASONRY) — SHUTTER SPAN		
	5'-0" OR LESS	5'-0" TO 8'-6"	8'-6" TO MAX. ALLOWED	5'-0" OR LESS	5'-0" TO 8'-6"	8'-6" TO MAX. ALLOWED
FROM 40.0 TO 60.0	12	12	7	6	6	5.5
	12	12	7.5	6	6	6
	12	12	8.5	6	6	6
	12	12	7	6	6	6
	12	12	9	6	6	6
FROM 60.0 TO 75.0	12	12	4.5	6	4	4
	12	12	5	6	4	4
	12	12	5.5	6	–	–
	12	12	4.5	6	4	4
	12	12	6.5	6	4	4
FROM >75.0 TO 90.0	12	12	3.5	4	4	4
	12	12	4	4	4	4
	12	12	4.5	–	–	–
	12	12	4	4	4	4
	12	12	5.0	4	4	4
FROM 90.0 TO 120.0	12	4.5	3	4	4	3.5
	12	4.5	–	4	4	4
	12	5.5	–	–	–	–
	12	4.5	3	4	4	3
	12	6	4	4	4	4
FROM 120.0 TO 170.0	8	–	–	4	3	3
	8	–	–	4	4	4
	9	–	–	–	–	–
	8	2.5	–	4	3	3
	10.5	3	–	4	4	4
FROM 170.0 TO 230.0	3.5	–	–	4	3	3
	6.5	–	–	4	4	4
	8	–	–	–	–	–
	3.5	–	–	4	4	4
	9	–	–	4	4	4

(SEE ANCHORS LEGEND BELOW.)

MAXIMUM DESIGN PRESSURE RATING "W" (p.s.f.) AND CORRESPONDING MAXIMUM ANCHOR SPACING (in.) SCHEDULE. +

(VALID FOR SECTIONS B2 & B2A ON SHEET 3).

MAXIMUM DESIGN LOAD "W" (p.s.f.)	FLOOR/CEILING MOUNTING INSTALLATION TOP OR BOTTOM (TO CONCRETE) — SHUTTER SPAN		
	5'-0" OR LESS	5'-0" TO 8'-6"	8'-6" TO MAX. ALLOWED
FROM 40.0 TO 60.0	6	6	6
	6	6	6
	6	6	6
	6	6	6
	6	6	6
FROM 60.0 TO 75.0	6	6	6
	6	6	6
	6	6	6
	6	6	6
	6	6	6
FROM >75.0 TO 90.0	6	6	6
	6	6	6
	6	6	6
	6	6	6
	6	6	6
FROM 90.0 TO 120.0	6	6	5.5
	6	6	6
	6	6	6
	6	6	5.5
	6	6	6
FROM 120.0 TO 170.0	6	5	5
	6	6	6
	6	6	6
	6	5	5
	6	6	6
FROM 170.0 TO 230.0	5.5	5	5
	6	6	6
	6	6	6
	5.5	5	5
	6	6	6

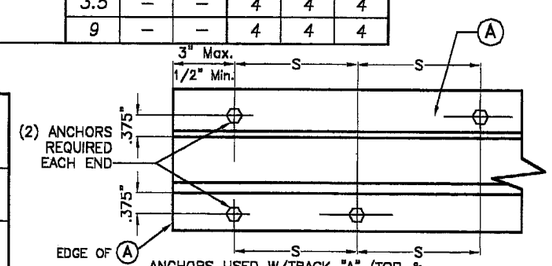

ANCHORS USED W/TRACK "A" (TOP & BOTTOM) SHALL BE INSTALLED AT Max. SPACINGS ("S") INDICATED ON SCHEDULES.
S = ANCHOR SPACING GIVEN ON SCHEDULE

PRODUCT REVISED
as complying with the Florida Buiding Code
Acceptance No 04-0524.01
Expiration Date 10/19/2006
By Helmy A. Malek
Miami Dade Product Control Division

F.B.C.(H.V.H.Z.)/MIAMI-DADE COUNTY

TILTECO INC.
TILLIT TESTING & ENGINEERING COMPANY
6598 N.W. 36th. St., Ste. 217, VIRGINIA GARDENS, FL 33166
Phone : (305)871-1530 . Fax : (305)871-1531
EB-0006719
WALTER A. TILLIT Jr. P. E.
FLORIDA Lic. # 44167

ASSA / BIG BERTHA HI-RISE ACCORDION SHUTTER

ROLLINGSHIELD, INC.
(ASSA # 19)
2500 N.W. 74th AVENUE
MIAMI, FL 33122

REV. No	DESCRIPTION	DATE	REV. No	DESCRIPTION	DATE
1	OLD 01-101	2/27/04	3		
2			4		

AS SHOWN
SCALE
2/27/04
DATE
04-023
DRAWING No
SHEET 8 OF 10

MAXIMUM DESIGN PRESSURE RATING "W" (p.s.f.) AND CORRESPONDING MAXIMUM ANCHOR SPACING (in.) SCHEDULE. +

(VALID FOR SECTIONS A2, B3, B4, B5 ON SHEETS 4 & 5).

NOTE:
DESIGN PRESSURE RATING CORRESPONDS ONLY TO NEGATIVE PRESSURE (SUCTION) LOADS, IN ACCORDANCE WITH ASCE 7-98 CRITERIA FOR A GIVEN OPENING. IF NEGATIVE PRESSURE VALUES COMPLY WITH THE REQUIRED PRESSURE FOR THE OPENING, THE POSITIVE PRESSURE WILL AUTOMATICALLY QUALIFY AND NEED NOT TO BE CHECKED.

MAXIMUM DESIGN LOAD "W" (p.s.f.)	MAXIMUM SHUTTER SPAN FOR SECTIONS "L" (ft.)		MINIMUM SEPARATION TO GLASS (in.) ALL SECTIONS	
	A2, B3, B4	B5	*	**
40	16'-0"	16'-0"	3"	3"
45	15'-11"	15'-11"	3"	3"
50	15'-6"	15'-6"	3"	3"
55	15'-1"	15'-1"	3"	3"
60	14'-9"	14'-9"	3"	3"
65	14'-6"	14'-6"	3"	3"
70	14'-3"	14'-3"	3"	3"
75	14'-0"	14'-0"	3"	3"
80	13'-9"	13'-9"	3"	3"
85	13'-7"	13'-5"	3"	3"
90	13'-4"	13'-1"	3"	3"
95	13'-2"	12'-9"	3"	3"
100	13'-0"	12'-5"	3"	3"
105	12'-10"	12'-1"	3"	3"
110	12'-8"	11'-10"	3"	3"
115	12'-5"	11'-7"	3"	3"
120	12'-2"	11'-4"	3"	3"
125	11'-11"	11'-1"	3"	3"
130	11'-9"	10'-11"	3"	3"
135	11'-6"	10'-8"	3"	3"
140	11'-3"	10'-6"	3"	3"
145	11'-1"	10'-4"	3"	3"
150	10'-11"	10'-2"	3"	3"
155	10'-9"	10'-0"	3"	3"
160	10'-7"	9'-10"	3"	3"
165	10'-5"	9'-8"	3"	3"
170	10'-3"	9'-6"	3"	3"
175	10'-1"	9'-5"	3"	3"
180	9'-11"	9'-3"	3"	3"
185	9'-10"	9'-1"	3"	3"
190	9'-8"	9'-0"	3"	3"
195	9'-7"	8'-9"	3"	3"
200	9'-5"	8'-7"	3"	3"
205	9'-4"	8'-4"	3"	3"
210	9'-3"	8'-2"	3"	3"
215	9'-1"	7'-11"	3"	3"
220	9'-0"	7'-9"	3 1/2"	3"
225	8'-9"	7'-7"	3 1/2"	3"
230	8'-7"	7'-5"	3 1/2"	3"

* FOR SHUTTERS INSTALLED WITHIN THE FIRST 30'-0" ELEVATION OF BUILDING MEASURED AT BOTTOM OF SHUTTER.

** FOR SHUTTERS INSTALLED ABOVE 30'-0" ELEVATION OF BUILDING, MEASURED AT BOTTOM OF SHUTTER.

(SEE ANCHORS LEGEND BELOW.)

MAXIMUM DESIGN PRESSURE RATING "W" (p.s.f.) AND CORRESPONDING MAXIMUM ANCHOR SPACING (in.) SCHEDULE. +

(VALID FOR SECTIONS A2, B3, B4 ON SHEETS 4 & 5).

MAXIMUM DESIGN LOAD "W" (p.s.f.)	WALL MOUNTING INSTALLATION AT TOP (TO CONCRETE) SECTION A2			WALL MOUNTING INSTALLATION AT BOTTOM (TO MASONRY) SECTION A2			FLOOR/CEILING MOUNTING INSTALLATION TOP OR BOTTOM (TO CONCRETE) SECTIONS B3, B4		
	SHUTTER SPAN			SHUTTER SPAN			SHUTTER SPAN		
	5'-0" OR LESS	5'-0" TO 8'-6"	8'-6" TO MAX. ALLOWED	5'-0" OR LESS	5'-0" TO 8'-6"	8'-6" TO MAX. ALLOWED	5'-0" OR LESS	5'-0" TO 8'-6"	8'-6" TO MAX. ALLOWED
FROM 40.0 TO 60.0	6	6	6	6	6	5.5	6	6	6
	6	6	6	6	6	6	6	6	6
	6	6	6	6	6	6	6	6	6
	6	6	6	6	6	6	6	6	6
	6	6	6	6	6	6	6	6	6
FROM 60.0 TO 75.0	6	6	6	6	6	4.5	6	6	6
	6	6	6	6	6	6	6	6	6
	6	6	6	6	6	6	6	6	6
	6	6	6	6	6	6	6	6	6
	6	6	6	6	6	6	6	6	6
FROM >75.0 TO 90.0	6	6	6	6	6	4.5	6	6	5.5
	6	6	6	6	6	6	6	6	6
	6	6	6	6	6	6	6	6	6
	6	6	6	6	6	6	6	6	6
	6	6	6	6	6	6	6	6	6
FROM 90.0 TO 120.0	6	6	6	6	4.5	–	6	6	4.5
	6	6	6	6	6	4.5	6	6	5.5
	6	6	6	6	6	5.5	6	6	6
	6	6	6	6	6	3.5	6	6	5.0
	6	6	6	6	6	5.0	6	6	6
FROM 120.0 TO 170.0	6	6	5	5.5	–	–	6	4.5	4
	6	6	5.5	6	5	–	6	5.5	4.5
	6	6	6	6	6	–	6	6	5.5
	6	6	6	6	3.5	2.5	6	5	4
	6	6	5	6	5	3.5	6	6	6
FROM 170.0 TO 230.0	6	4	4	4	–	–	5	3	3
	6	4.5	4.5	6	–	–	6	–	–
	6	5	5	6	–	–	6	4.5	4.5
	6	4	4	6	–	–	5	3	3
	6	5.5	5.5	6	3	3	6	4.5	4.5

(SEE ANCHORS LEGEND BELOW.)

MAXIMUM DESIGN PRESSURE RATING "W" (p.s.f.) AND CORRESPONDING MAXIMUM ANCHOR SPACING (in.) SCHEDULE. +

(VALID FOR SECTION B5 ON SHEET 5).

MAXIMUM DESIGN LOAD "W" (p.s.f.)	FLOOR/CEILING MOUNTING INSTALLATION TOP OR BOTTOM (TO CONCRETE)		
	SHUTTER SPAN		
	5'-0" OR LESS	5'-0" TO 8'-6"	8'-6" TO MAX. ALLOWED
FROM 40.0 TO 60.0	6	6	6
	6	6	6
	6	6	6
	6	6	6
	6	6	6
FROM 60.0 TO 75.0	6	6	6
	6	6	6
	6	6	6
	6	6	6
	6	6	6
FROM >75.0 TO 90.0	6	6	5.5
	6	6	6
	6	6	6
	6	6	5.5
	6	6	6
FROM 90.0 TO 120.0	6	6	4.5
	6	6	5.5
	6	6	5
	6	6	4.5
	6	6	6
FROM 120.0 TO 170.0	6	4	4
	6	5	4.5
	6	6	5.5
	6	4.5	4
	6	6	5.5
FROM 170.0 TO 230.0	5.5	3.5	3.5
	6	4	4
	6	5	5
	5.5	3.5	3.5
	6	5.5	5.5

+ MAXIMUM ANCHOR SPACING ARE VALID FOR 3 1/2" EDGE DISTANCE. FOR E. D. LESS THAN 3 1/2", REDUCE ANCHOR SPACING BY MULTIPLYING SPACING SHOWN ON SCHEDULE BY THE FOLLOWING FACTORS. (NOTE : Min. E. D. FOR CALK-IN ANCHORS IS 2 1/2"). REDUCED SPACING OBTAINED USING FACTOR SHALL NOT BE LESS THAN MINIMUM SPACING INDICATED FOR EACH ANCHOR TYPE AT ANCHORS LEGEND.

ACTUAL E. D.	FACTOR
3"	.86
2 1/2"	.75
2"	.50

ANCHORS LEGEND

ANCHORS TYPE	ANCHOR MIN. SPACING
TAPCON OR MAXI-SET TAPCONS	3.0"
5/16"ØRED HD DYNABOLT SLEEVE	3.75"
3/8"ØRED HD DYNABOLT SLEEVE	4.5"
CALK-IN	2.5"
CRETE-FLEX SS4	3.0"

3/1/04

PRODUCT REVISED
as complying with the Florida Buiding Code
Acceptance No 04-0524.01
Expiration Date 10/19/2006
By Helena A. Molina
Miami Dade Product Control Division

F.B.C.(H.V.H.Z.)/MIAMI-DADE COUNTY

TILTECO INC.
TILLIT TESTING & ENGINEERING COMPANY
6595 N.W. 36th. St. Ste. 217, VIRGINIA GARDENS, FL 33166
Phone : (305)871-1530 . Fax : (305)871-1531
EB-0006719
WALTER A. TILLIT Jr. P. E.
FLORIDA Lic. # 44167

ASSA / BIG BERTHA HI-RISE ACCORDION SHUTTER

ROLLINGSHIELD, INC.
(ASSA # 19)
2500 N.W. 74th AVENUE
MIAMI, FL 33122

REV. No	DESCRIPTION	DATE	REV. No	DESCRIPTION	DATE
1	OLD 01-101	2/27/04	3		
2			4		

AS SHOWN
SCALE
2/27/04
DATE
04-023
DRAWING No
SHEET 9 OF 10

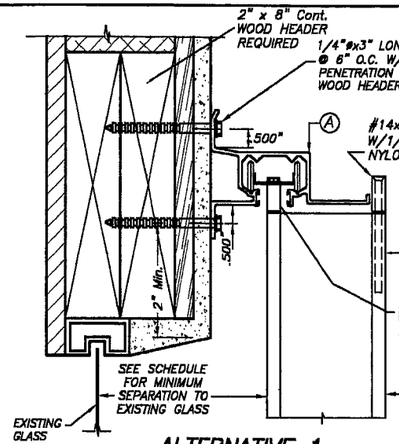

ALTERNATIVE 1

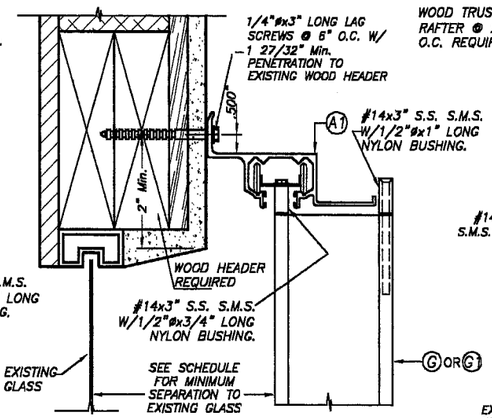

ALTERNATIVE 3

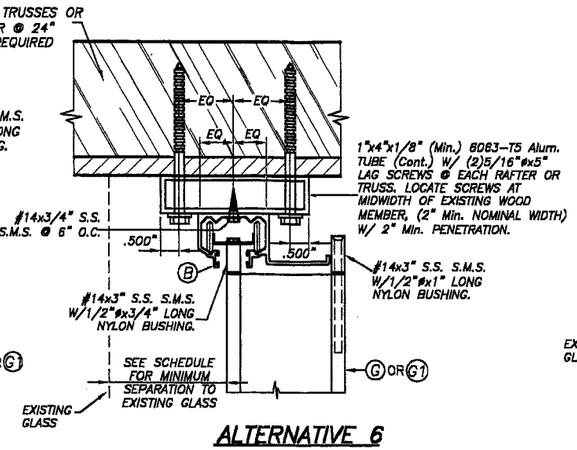

ALTERNATIVE 6

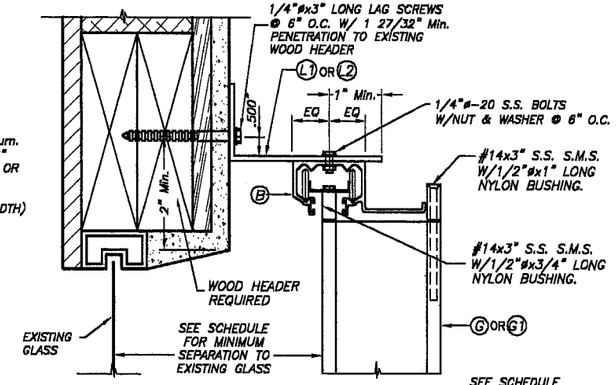

ALTERNATIVE 9

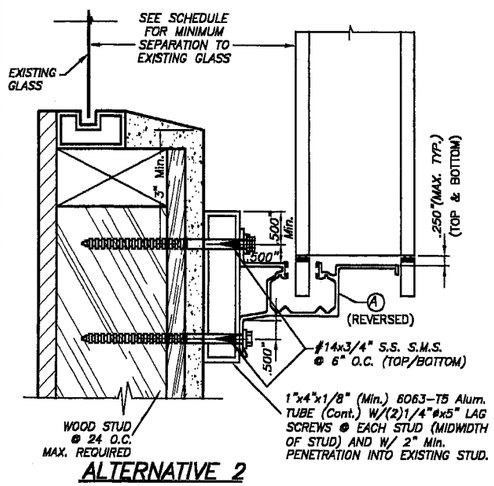

ALTERNATIVE 2

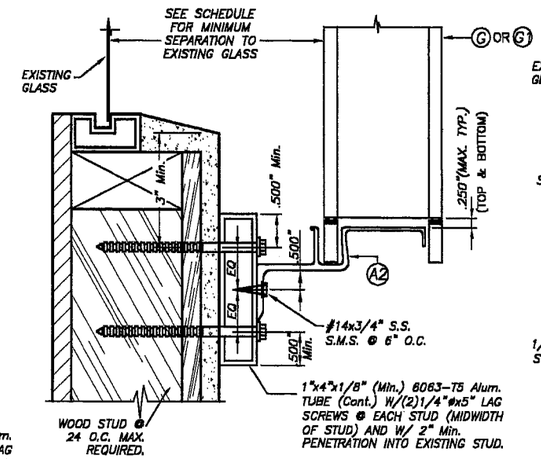

ALTERNATIVE 4

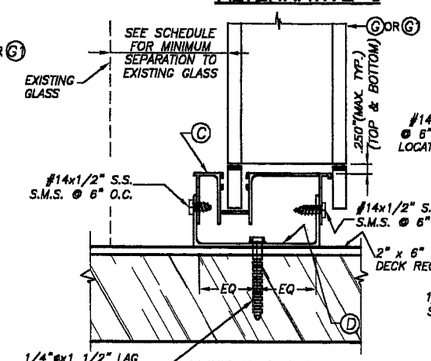

ALTERNATIVE 7

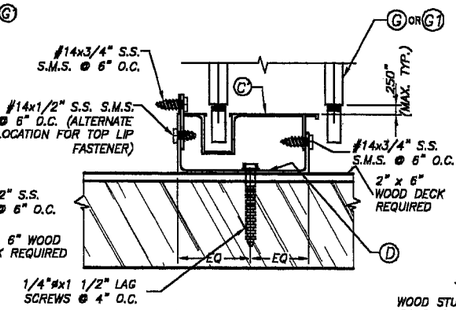

ALTERNATIVE 7A

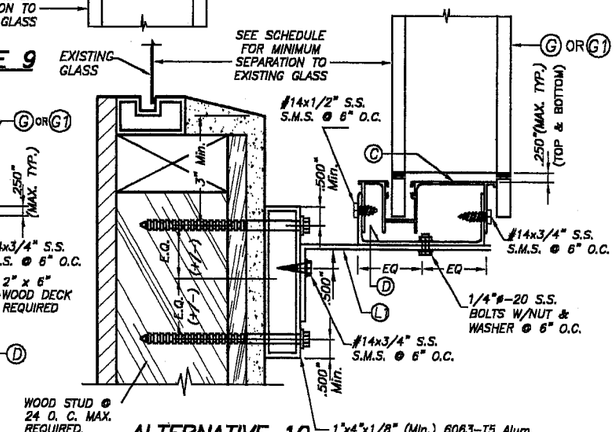

ALTERNATIVE 10

WALL MOUNTING INSTALLATIONS
SECTION A

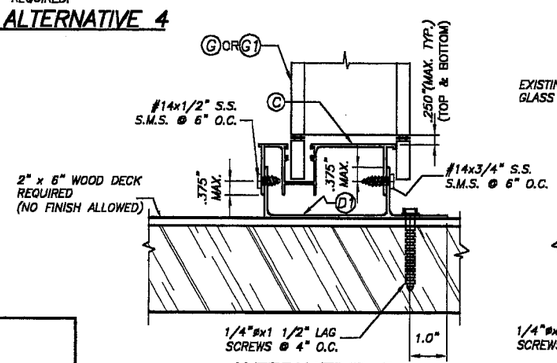

ALTERNATIVE 5

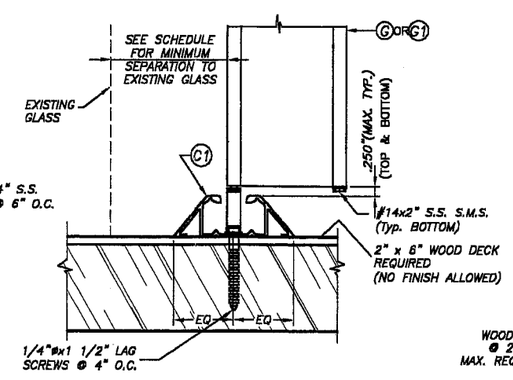

ALTERNATIVE 8

CEILING & FLOOR MOUNTING INSTALLATION
SECTION B
SCALE: 1/4" = 1"

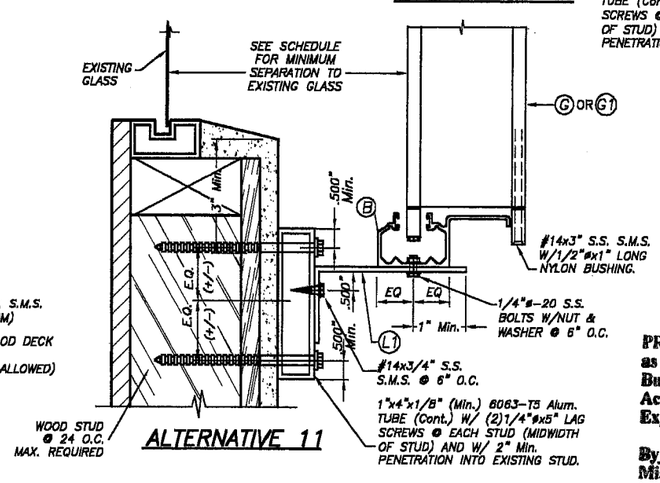

ALTERNATIVE 11

WALL MOUNTING (BUILD-OUT) INSTALLATIONS
SECTION C

PRODUCT REVISED
as complying with the Florida Building Code
Acceptance No 04-0524.01
Expiration Date 10/19/2006
By Helmy A. Malek
Miami Dade Product Control Division

NOTES:

1. INSTALLATIONS ARE ONLY VALID FOR INSTALLATIONS WITH DESIGN WIND LOADS LESS THAN OR EQUAL TO 75 p.s.f. AND 9'-0" Max. SHUTTER SPAN.
2. FOR NEW WOOD FRAME CONSTRUCTION: WOOD MEMBERS TO BE SOUTHERN PINE No. 2, W/ SPECIFIC DENSITY OF 0.55 OR EQUAL.

NOTE FOR COMBINATION OF SECTIONS:

FLOOR/ WALL/ CEILING MOUNTING SECTIONS CAN BE COMBINED IN ANY WAY TO SUIT ANY INSTALLATION.

INSTALLATION DETAILS ON EXISTING WOOD BUILDINGS

3/1/04

F.B.C.(H.V.H.Z.)/MIAMI-DADE COUNTY

TILTECO INC.
TILLIT TESTING & ENGINEERING COMPANY
6595 N.W. 36th. St., Ste. 217, VIRGINIA GARDENS, FL 33166
Phone : (305)871-1530 . Fax : (305)871-1531
EB-0006719
WALTER A. TILLIT Jr. P. E.
FLORIDA Lic. # 44167

ASSA / BIG BERTHA HI-RISE ACCORDION SHUTTER

ROLLINGSHIELD, INC.
(ASSA # 19)
2500 N.W. 74th AVENUE
MIAMI, FL 33122

REV. No	DESCRIPTION	DATE	REV. No	DESCRIPTION	DATE
1	OLD 01-101	2/27/04	3		
2			4		

AS SHOWN
SCALE

2/27/04
DATE

04-023
DRAWING No

SHEET 10 OF 10