MIAMI-DADE

BUILDING CODE COMPLIANCE OFFICE (BCCO)
PRODUCT CONTROL DIVISION

MIAMI-DADE COUNTY, FLORIDA
METRO-DADE FLAGLER BUILDING
140 WEST FLAGLER STREET, SUITE 1603
MIAMI, FLORIDA 33130-1563
(305) 375-2901 FAX (305) 375-2908

NOTICE OF ACCEPTANCE (NOA)

Olympic Manufacturing Group
153 Bowles Road
Agawam, MA 01001

SCOPE:

This NOA is being issued under the applicable rules and regulations governing the use of construction materials. The documentation submitted has been reviewed by Miami-Dade County Product Control Division and accepted by the Board of Rules and Appeals (BORA) to be used in Miami Dade County and other areas where allowed by the Authority Having Jurisdiction (AHJ).

This NOA shall not be valid after the expiration date stated below. The Miami-Dade County Product Control Division (In Miami Dade County) and/or the AHJ (in areas other than Miami Dade County) reserve the right to have this product or material tested for quality assurance purposes. If this product or material fails to perform in the accepted manner, the manufacturer will incur the expense of such testing and the AHJ may immediately revoke, modify, or suspend the use of such product or material within their jurisdiction. BORA reserves the right to revoke this acceptance, if it is determined by Miami-Dade County Product Control Division that this product or material fails to meet the requirements of the applicable building code.

This product is approved as described herein, and has been designed to comply with the Florida Building Code, including the High Velocity Hurricane Zone.

DESCRIPTION: OlyLok Locking Impact Nail

LABELING: Each unit shall bear a permanent label with the manufacturer's name or logo, city, state and following statement: "Miami-Dade County Product Control Approved", unless otherwise noted herein.

RENEWAL of this NOA shall be considered after a renewal application has been filed and there has been no change in the applicable building code negatively affecting the performance of this product.

TERMINATION of this NOA will occur after the expiration date or if there has been a revision or change in the materials, use, and/or manufacture of the product or process. Misuse of this NOA as an endorsement of any product, for sales, advertising or any other purposes shall automatically terminate this NOA. Failure to comply with any section of this NOA shall be cause for termination and removal of NOA.

ADVERTISEMENT: The NOA number preceded by the words Miami-Dade County, Florida, and followed by the expiration date may be displayed in advertising literature. If any portion of the NOA is displayed, then it shall be done in its entirety.

INSPECTION: A copy of this entire NOA shall be provided to the user by the manufacturer or its distributors and shall be available for inspection at the job site at the request of the Building Official.

This new NOA consists of pages 1 through 4.
The submitted documentation was reviewed by Frank Zuloaga, RRC

PRODUCT CONTROL ACCEPTED

ROOFING ASSEMBLY APPROVAL:

Category: Roofing Fasteners
Sub Categories: Base Sheet, Insulation

SCOPE

This approves "OlyLok Locking Impact Nail" roofing fastener systems described in Section 2 of this Notice of Acceptance

PRODUCT DESCRIPTION

Product	Dimensions	Test Specifications	Product Description
OlyLok Locking Impact Nail	2.7" head x 1.4" long, 2.7" head x 1.8" long, 2.7" head x 2.8" long, 2.7" head x 3.8" long, 2.7" head x 4.8" long	TAS 114 TAS 117	Tube formed from .030" thick G-90 hot dipped galvanized steel. A 2.7" diameter disk formed from .018" AZ-55 Galvalume steel is factory assembled to each fastener. Locking staple formed from .080" coated steel is factory assembled into tube. For base sheet and insulation attachment to new or existing cementitious wood fiber, poured gypsum and lightweight concrete decks.

EVIDENCE SUBMITTED:

Test Agency	Test Identifier	Test Name/Report	Date
Factory Mutual Research Corp.	Class 4457 Class 4452, 4457	4D2A3.AM 3006646	09/14/99 02/04/2000
Exterior Research & Design, LLC.	TAS 117 TAS 117 TAS 114	#4670.03.01-1 #4674.11.01-1	09/20/01 11/21/01
IRT-ARCON, Inc.	TAS 114 TAS 114	02-011 02-026	02/07/02 07/26/02

TYPICAL PROPERTIES

Note: **A margin of safety of 2 has been applied to the listed test results.**

Withdrawal Resistance Performance - TAS 117(A) - Static Load		
Fastener	**Deck Type**	**Static Withdrawal Resistance (lbf)**
OlyLok Locking Impact Nail	Poured gypsum	262.7
OlyLok Locking Impact Nail	Cementitious wood fiber	176.2

Withdrawal Resistance Performance - TAS 117(A) - Pulsating Load		
Fastener	**Deck Type**	**Static Withdrawal Resistance (lbf)**
OlyLok Locking Impact Nail	Poured gypsum	196.0
OlyLok Locking Impact Nail	Cementitious wood fiber	105.0

Base Sheet Rupture Performance, TAS 117(B): 2.7" Head					
OlyLok Locking Impact Nail					
Manuf.	**Base Sheet**	**Rupture Value (lbs.)**	**Manuf.**	**Base Sheet**	**Rupture Value (lbs.)**
Honeywell	Black Armor base Sheet	219.2	John Mansville	Dynabase	301.9
Bitec	Beta Base	240.0	John Mansville	Vestulation	227.7
CertainTeed	Glasbase	179.0	John Mansville	Perma Ply-28	275.4
Certainteed	Flex-I-Glas Base	240.2	Siplast	Parabase	217.4
CertainTeed	Flex-I-Glas All Weather Empire Base	249.0	Siplast	Parabase Plus	279.4
Firestone	MB Base	256.2	Soprema	Sopra-G	245.0
GAF	GAFGLAS Stratavent	237.9	Soprema	Modified Sopra-G	206.4
GAF	GAFGLAS Stratavent perforated	193.5	Tamko	Glass-Base	233.6
GAF	GAFGLAS #75	234.0	Tamko	Vapor-Chan	315.8
WP Hickman	Multiply glass	266.3	Tamko	Base-N-Ply	206.1
WP Hickman	Multiply glass CL	381.2			

APPROVED APPLICATIONS

Tradename: **OlyLok Locking Impact Nail Assembled Base Sheet/Insulation Fastener**

Compatible Plate(s): N/A

Application: See specific Roof Assembly Product Control Notice of Acceptance for fastener density and Approved attachment patterns.

Deck: New or sound existing Cementitious Wood Fiber, Poured Gypsum, Lightweight Concrete.

DRAWING

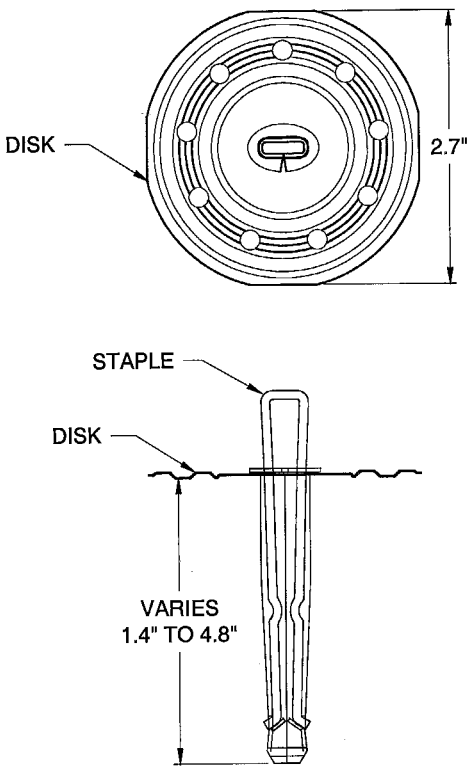

OLYLOK LOCKING IMPACT NAIL

END OF THIS ACCEPTANCE