MIAMI-DADE

BUILDING CODE COMPLIANCE OFFICE (BCCO)
PRODUCT CONTROL DIVISION

MIAMI-DADE COUNTY, FLORIDA
METRO-DADE FLAGLER BUILDING
140 WEST FLAGLER STREET, SUITE 1603
MIAMI, FLORIDA 33130-1563
(305) 375-2901 FAX (305) 375-2908

NOTICE OF ACCEPTANCE (NOA)

YKK AP America
332 Firetower Road
Dublin, GA 31021

SCOPE:
This NOA is being issued under the applicable rules and regulations governing the use of construction materials. The documentation submitted has been reviewed by Miami-Dade County Product Control Division and accepted by the Board of Rules and Appeals (BORA) to be used in Miami Dade County and other areas where allowed by the Authority Having Jurisdiction (AHJ).

This NOA shall not be valid after the expiration date stated below. The Miami-Dade County Product Control Division (In Miami Dade County) and/or the AHJ (in areas other than Miami Dade County) reserve the right to have this product or material tested for quality assurance purposes. If this product or material fails to perform in the accepted manner, the manufacturer will incur the expense of such testing and the AHJ may immediately revoke, modify, or suspend the use of such product or material within their jurisdiction. BORA reserves the right to revoke this acceptance, if it is determined by Miami-Dade County Product Control Division that this product or material fails to meet the requirements of the applicable building code.

This product is approved as described herein, and has been designed to comply with the Florida Building Code, including the High Velocity Hurricane Zone.

DESCRIPTION: Series "YSD700" Aluminum Sliding Glass Door (SMI)

APPROVAL DOCUMENT: Drawing No. **W03-65**, titled "YSD700 Aluminum Sliding Glass Door (SMI)", sheets 1 through 8 of 8, dated 08/13/03 with revision **"D"** dated 07/14/04, signed and sealed by Dr. Humayoun Farooq, P.E., bearing the Miami-Dade County Product Control Revision stamp with the Notice of Acceptance number and expiration date by the Miami-Dade County Product Control Division.

MISSILE IMPACT RATING: Small Missile Impact Resistant

LABELING: Each unit shall bear a permanent label with the manufacturer's name or logo, city, state and following statement: "Miami-Dade County Product Control Approved", unless otherwise noted herein.

RENEWAL of this NOA shall be considered after a renewal application has been filed and there has been no change in the applicable building code negatively affecting the performance of this product.

TERMINATION of this NOA will occur after the expiration date or if there has been a revision or change in the materials, use, and/or manufacture of the product or process. Misuse of this NOA as an endorsement of any product, for sales, advertising or any other purposes shall automatically terminate this NOA. Failure to comply with any section of this NOA shall be cause for termination and removal of NOA.

ADVERTISEMENT: The NOA number preceded by the words Miami-Dade County, Florida, and followed by the expiration date may be displayed in advertising literature. If any portion of the NOA is displayed, then it shall be done in its entirety.

INSPECTION: A copy of this entire NOA shall be provided to the user by the manufacturer or its distributors and shall be available for inspection at the job site at the request of the Building Official.
This NOA **Replaces & Revises NOA # 03-1006.09** and, consists of this page 1 and evidence page E-1, as well as approval document mentioned above.
The submitted documentation was reviewed by **Ishaq I. Chanda, P.E.**

PRODUCT CONTROL ACCEPTED

7/26/14

YKK AP America

NOTICE OF ACCEPTANCE: EVIDENCE SUBMITTED

A. DRAWINGS

1. Manufacturer's die drawings and sections.
2. Drawing No. **W03-65**, titled "YSD700 Aluminum Sliding Glass Door (SMI.)", sheets 1 through 8 of 8, dated 08/13/03 with revision **"D"** dated 07/14/04, signed and sealed by Dr. Humayoun Farooq, P.E.

B. TESTS

1. Test reports on 1) Air Infiltration Test, per FBC, TAS 202-94
   2) Uniform Static Air Pressure Test, Loading per FBC, TAS 202-94
   3) Water Resistance Test, per FBC, TAS 202-94
   4) Forced Entry Test, per FBC 2411 3.2.1 and TAS 202-94
   5) Small Missile Impact test per FBC, TAS 201-94.
   6) Cyclic Loading Test, per FBC, TAS 203-94.

   Along with installation diagram of an aluminum sliding glass door, prepared by Hurricane Test Laboratory, Inc., Test Report No. **HTL-0231-0709-03**, specimen #2, #3 and #4, dated 08/05/03, signed and sealed by Vinu J. Abraham, P.E.
2. Additional Test reports on 1) Small Missile Impact test per FBC, TAS 201-94.
   2) Cyclic Loading Test, per FBC, TAS 203-94.

   Along with installation diagram of an aluminum sliding glass door, prepared by Hurricane Test Laboratory, Inc., Test Reports No(s). **HTL-0231-0120.03** (Sp#1) and **HTL-0231-0910-02** (Sp#2), both dated 07-15-03, signed and sealed by Vinu J. Abraham, P.E. (***Submitted under NOA # 03-1006.09)***

C. CALCULATIONS

1. Comparative analysis & anchor verification calculations dated 07-10-04 and last revised on 07-14-04, prepared by Al-Farooq Corporation, signed and sealed by Dr. Humayoun Farooq, P.E
2. Comparative analysis & anchor verification calculations dated 08-12-03, prepared by Al-Farooq Corporation, signed and sealed by Dr. Humayoun Farooq, P.E.(***Submitted under NOA # 03-1006.09)***

D. QUALITY ASSURANCE

1. Miami Dade Building Code Compliance Office (BCCO)

E. MATERIAL CERTIFICATIONS

1. Notice of Acceptance No. **00-1212.04** issued to E.I. DuPont DeNemours for "Dupont Butacite PVB", expiring on 12/11/2005
2. Notice of Acceptance No. **01-0205.02** issued to Solutia for "Saflex/KeepSafeMax", expiring on 05/21/2006

F. STATEMENTS

1. Statement letter of conformance & no financial interest, dated 08/12/03, signed and sealed by Dr. Humayoun Farooq, P.E. (***Submitted under NOA # 03-1006.09)***

G. OTHER

1. Based on review of evidence submittal, letter from the consultant stating that the product is in compliance with the Florida Building Code (FBC).
2. Revised Test Proposal # **02-0383**dated 05-15-03 and June 20, 2002 approved by BCCO.
3. This file **Replaces & revises** NOA# **03-1006.09**, expiring April 01, 2009.

Ishaq I. Chanda

Ishaq I. Chanda, P.E.
Product Control Examiner
NOA No 04-0603.02
Expiration Date: April 01, 2009
Approval Date: August 19, 2004

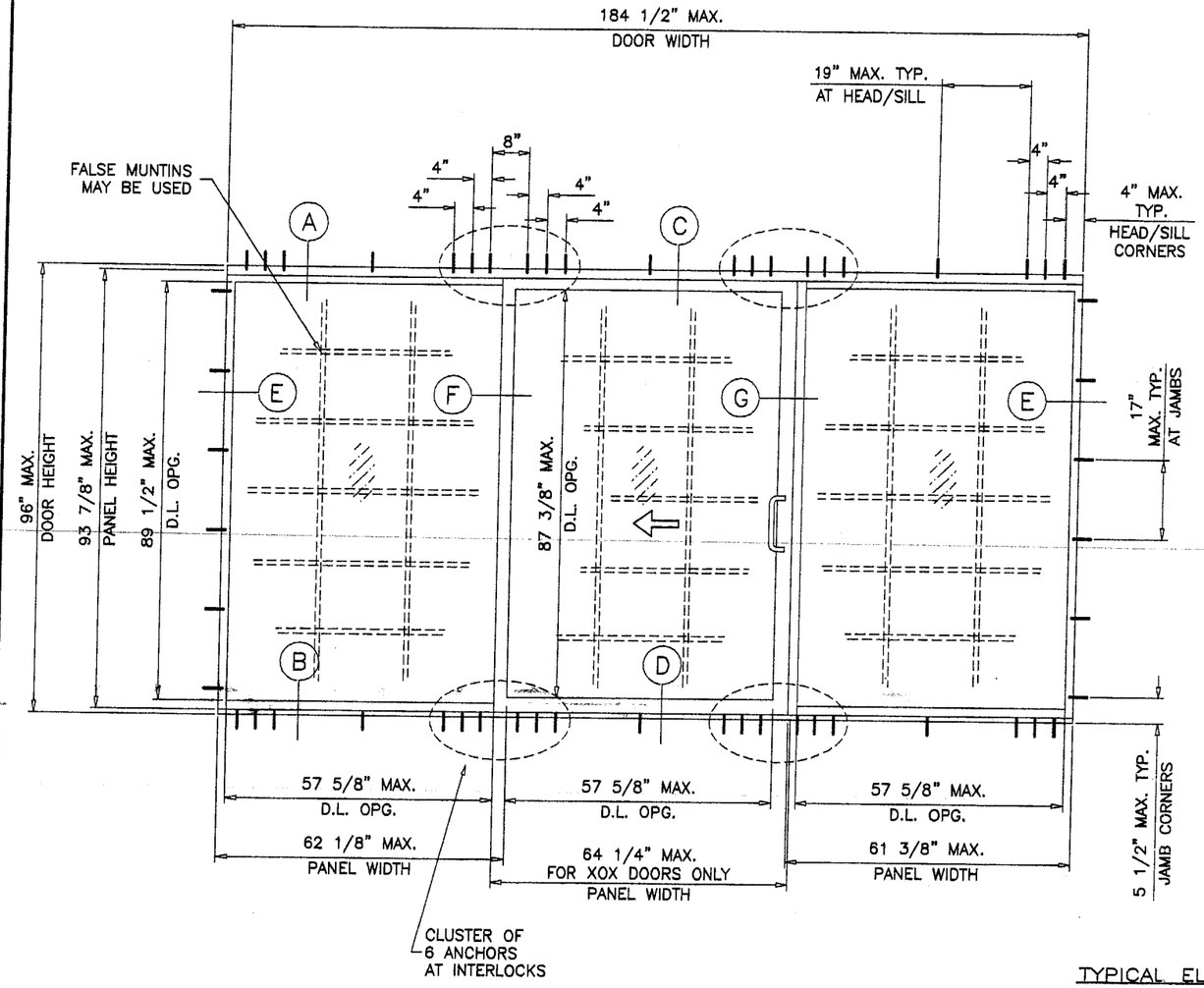

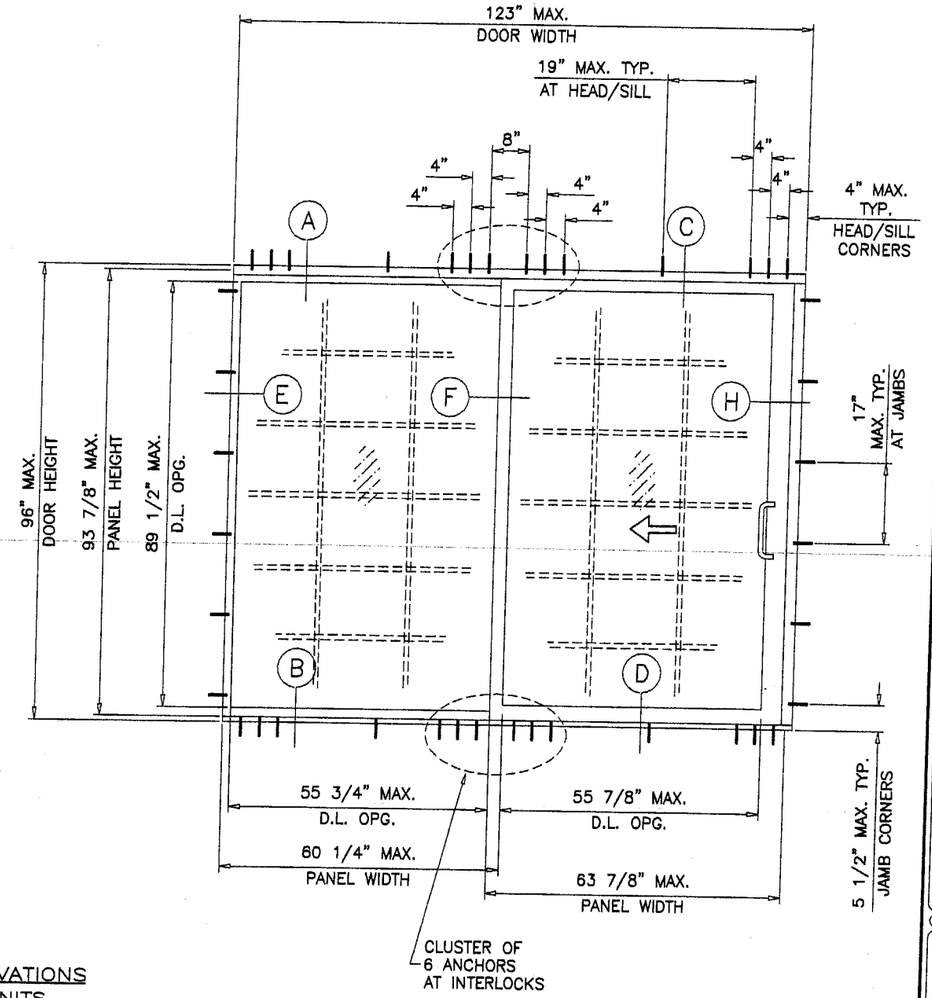

TYPICAL ELEVATIONS
TESTED UNITS

PRODUCT REVISED
as complying with the Florida Building Code
Acceptance No 04-0603.02
Expiration Date APRIL 01, 2009
By Ishaq I. Chand
Miami Dade Product Control Division

YSD700 ALUMINUM SLIDING GLASS DOOR (S.M.I.)

DOORS WITH LAMINATED GLASS RATED FOR SMALL MISSILE IMPACT. MIAMI–DADE COUNTY APPROVED IMPACT RESISTANT SHUTTERS REQUIRED FOR INSTALLATIONS UP TO 30 FT. OF GRADE SHUTTERS NOT REQD. FOR INSTALLATIONS ABOVE 30 FT. OF GRADE DESIGN LOAD RATING FOR THESE DOORS TO BE AS PER CHART SHOWN ON SHEET 3.

THIS PRODUCT IS DESIGNED TO COMPLY WITH THE HIGH VELOCITY HURRICANE ZONE OF THE 2001 FLORIDA BUILDING CODE.

WOOD BUCKS BY OTHERS, MUST BE ANCHORED PROPERLY TO TRANSFER LOADS TO THE STRUCTURE.

ANCHORS SHALL BE AS LISTED, SPACED AS SHOWN ON DETAILS. ANCHOR EMBEDMENT TO BASE MATERIAL SHALL BE BEYOND WALL DRESSING OR STUCCO.

ANCHORING OR LOADING CONDITIONS NOT SHOWN IN THESE DETAILS ARE NOT PART OF THIS APPROVAL.

A 33% INCREASE IN ALLOWABLE STRESS IS USED IN DESIGN OF ANCHORS.

Engr: DR. HUMAYOUN FAROOQ
STRUCTURES
FLA. PE # 16557
C.A.N. 3538

JUL 2 2 2004

AL–FAROOQ CORPORATION
ENGINEERS, PLANNERS & PRODUCT DESIGN
1235 SW 87 AVE
MIAMI, FLORIDA 33174
TEL. (305) 264–8100 FAX. (305) 262–6978
COMP–ANL\W03–65YKK

YSD700 ALUMINUM SLIDING GLASS DOOR (S.M.I.)

YKK AP AMERICA INC.
332 FIRETOWER ROAD
DUBLIN, GEORGIA 31021
TEL.(478) 277–1955 FAX(478) 277–1978

revisions:

no	date	by	description
A	10.31.03		REV. PER BCCO COMMENTS
B	12.31.03		NOTES REV.
C	02.16.04		OXXO DOOR ADD.
D	07.14.04		REV. PER BCCO COMMENTS

date: 08–13–03
scale: 3/8"=1'–0"
dr. by: HAMID
chk. by:

drawing no.
W03–65

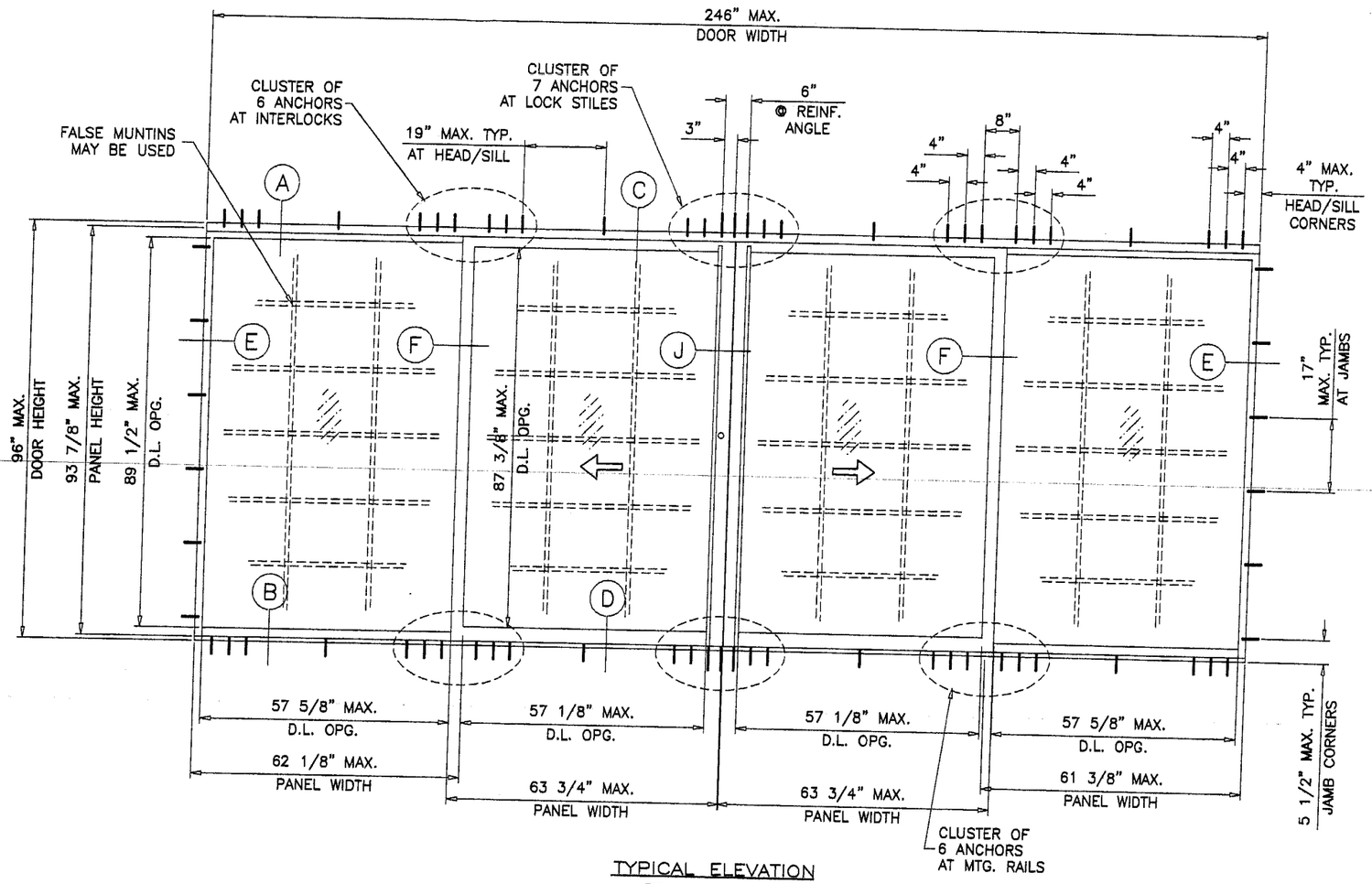

TYPICAL ELEVATION
TESTED UNIT

PRODUCT REVISED
as complying with the Florida Building Code
Acceptance No 04-0603.02
Expiration Date APRIL 01, 2009
By Ishaq I. Chanda
Miami Dade Product Control Division

Engr: DR. HUMAYOUN FAROOQ
STRUCTURES
FLA. PE # 16557
C.A.N. 3538

JUL 22 2004

AL-FAROOQ CORPORATION
ENGINEERS, PLANNERS & PRODUCT DESIGN
1235 SW 87 AVE
MIAMI, FLORIDA 33174
TEL. (305) 264-8100 FAX. (305) 262-6978
COMP-ANL\W03-65YKK

YKK AP AMERICA INC.
332 FIRETOWER ROAD
DUBLIN, GEORGIA 31021
TEL.(478) 277-1955 FAX(478) 277-1978

YSD700 ALUMINUM SLIDING GLASS DOOR (S.M.I.)

revisions:

no	date	by	description
A	10.31.03		REV. PER BCCO COMMENTS
B	12.31.03		NOTES REV.
C	02.16.04		OXXO DOOR ADD.
D	07.14.04		NO CHANGE THIS SHEET

date: 08-13-03
scale: 3/8"=1'-0"
dr. by: HAMID
chk. by:

drawing no.
W03-65

DESIGN LOAD CAPACITY – PSF			
PANEL WIDTH NOMINAL INCHES	DOOR HEIGHT INCHES	GLASS TYPE 'D' & 'E'	
		EXT. (+)	INT. (–)
30	80	120.0	120.0
36		120.0	120.0
42		120.0	120.0
48		109.9	109.9
54		98.7	98.7
60		90.4	90.4
64		103.9	103.9
30	84	120.0	120.0
36		120.0	120.0
42		120.0	120.0
48		103.7	103.7
54		93.0	93.0
60		85.6	85.6
64		98.9	98.9
30	90	120.0	120.0
36		120.0	120.0
42		114.3	114.3
48		95.7	95.7
54		85.4	85.4
60		78.9	78.9
64		91.6	91.6
30	96"	120.0	120.0
36		120.0	120.0
42		108.0	108.0
48		88.9	88.9
54		78.7	78.7
60		72.7	72.7
64		84.7	84.7

NOTE: LOWER DESIGN PRESSURES SHALL CONTROL FOR COMBINATIONS OF THE PANELS.

DAYLIGHT OPNG.
D.L.O. HEIGHT = DOOR HT. – 6.5
D.L.O. WIDTH = AVG. PANEL WIDTH – 3.875

PRODUCT REVISED
as complying with the Florida
Building Code
Acceptance No 04-0603.02
Expiration Date APRIL 01, 2009
By [signature]
Miami Dade Product Control
Division

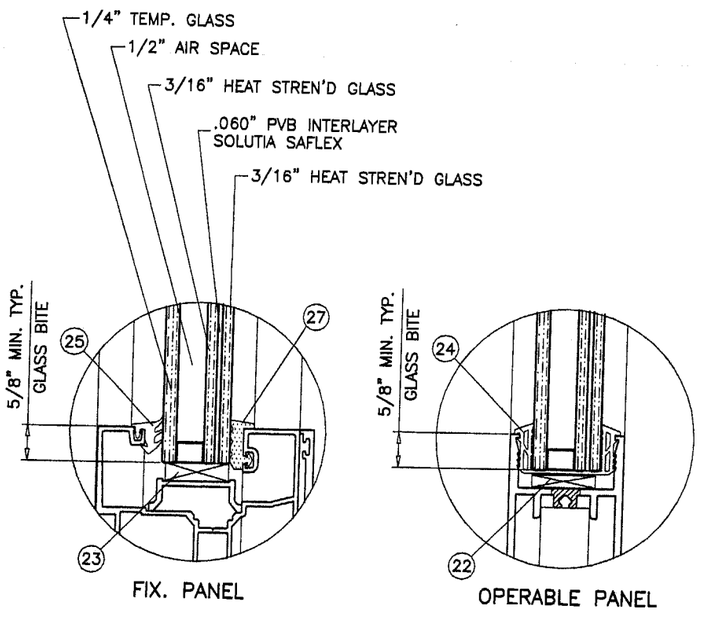

FIX. PANEL

OPERABLE PANEL

GLASS TYPE 'D'

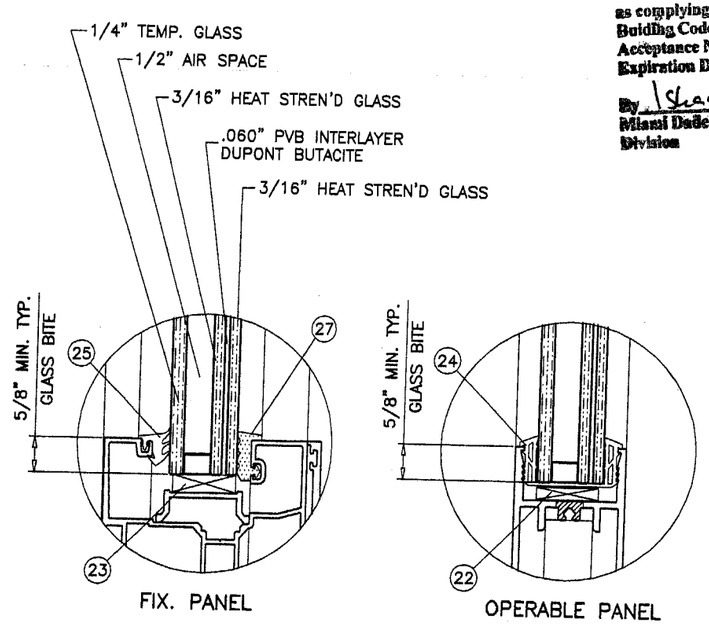

FIX. PANEL

OPERABLE PANEL

GLASS TYPE 'E'

Engr: DR. HUMAYOUN FAROOQ
STRUCTURES
FLA. PE # 16557
C.A.N. 3538

JUL 2 2 2004

YSD700 ALUMINUM SLIDING GLASS DOOR (S.M.I.)

YKK AP AMERICA INC.
332 FIRETOWER ROAD
DUBLIN, GEORGIA 31021
TEL.(478) 277-1955 FAX(478) 277-1978

AL-FAROOQ CORPORATION
ENGINEERS, PLANNERS & PRODUCT DESIGN
1235 SW 87 AVE
MIAMI, FLORIDA 33174
TEL. (305) 264-8100 FAX. (305) 262-6978

COMP-ANL\W03-65YKK

revisions:

no	date	by	description
A	10.31.03		NO CHANGE THIS SHEET
B	12.31.03		INTERLAYER SPECIFIED
C	02.16.04		OXXO DOOR ADD.
D	07.14.04		REV. PER BCCO COMMENTS

date: 08-13-03
scale: 3/8" = 1"
dr. by: HAMID
chk. by:

drawing no.
W03-65

sheet 3 of 8

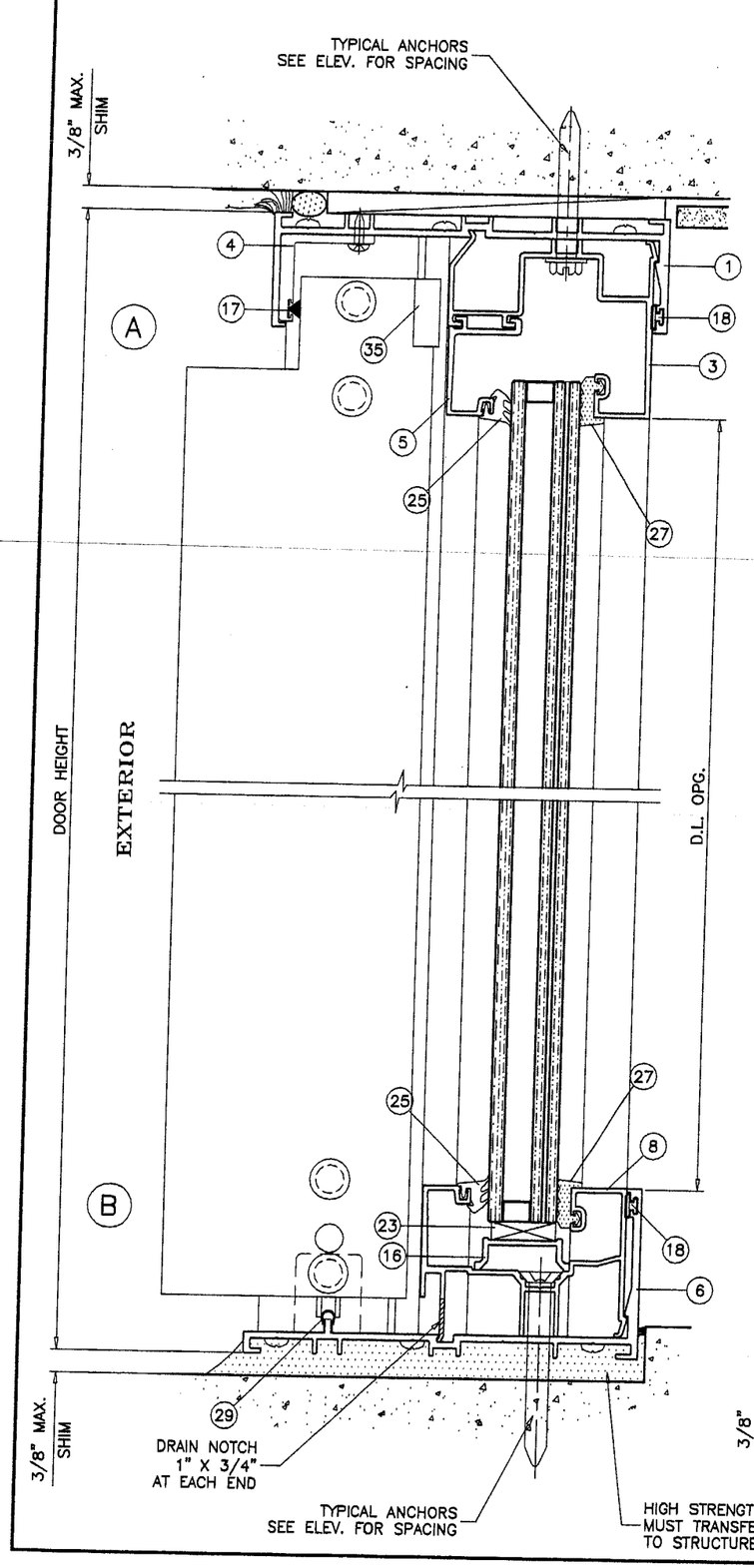

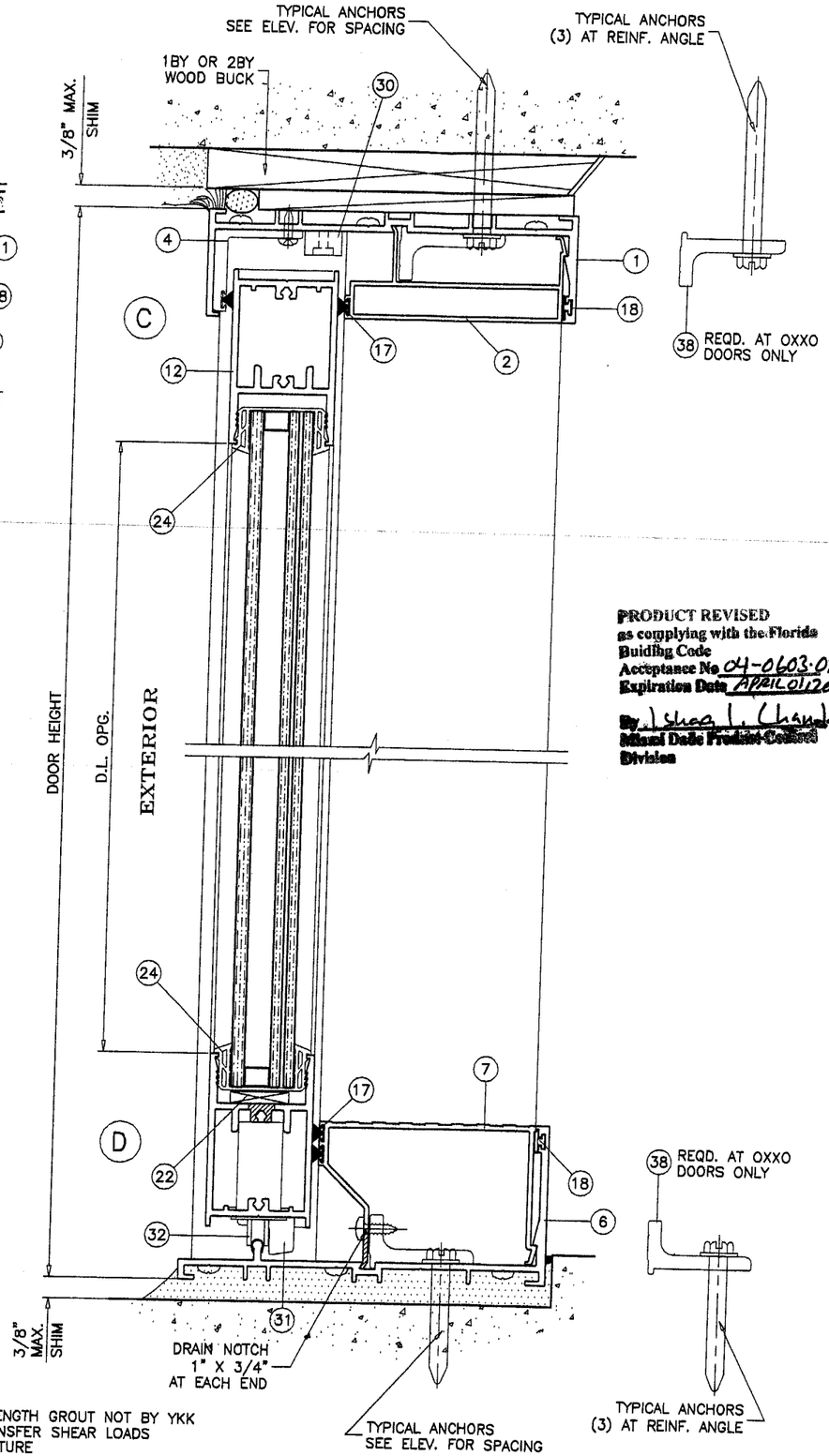

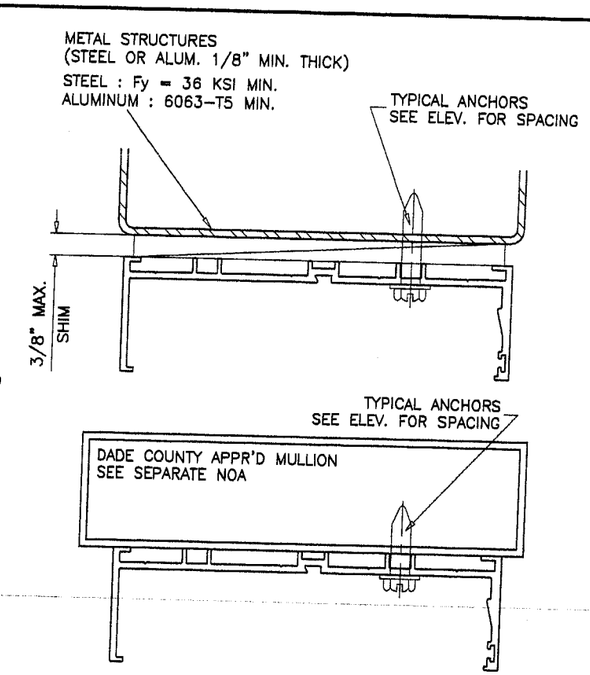

PRODUCT REVISED
as complying with the Florida Building Code
Acceptance No 04-0603.02
Expiration Date APRIL 01, 2009
By Ishaq I. Chunk
Miami Dade Product Control Division

WOOD BUCKS NOT BY YKK, MUST SUSTAIN LOADS IMPOSED BY GLAZING SYSTEM AND TRANSFER THEM TO THE BUILDING STRUCTURE.

TYPICAL ANCHORS: SEE ELEV./CHART FOR SPACING

5/16" TAPCONS
INTO 2BY WOOD BUCKS OR WOOD STRUCTURE
1-1/2" MIN. PENETRATION INTO WOOD

THRU 1BY WOOD BUCKS INTO MASONRY OR CONC.
1-1/2" MIN. EMBED INTO MASONRY OR CONC.

DIRECTLY INTO CONCRETE
1-1/2" MIN. EMBED INTO CONCRETE

5/16" DRILLFLEX SELF DRILLING SCREWS
INTO METAL STRUCTURES (1/8" MIN. THICKNESS)

#14 SMS
INTO APPROVED MULLIONS (NO SHIM SPACE)

TYPICAL EDGE DISTANCE
INTO CONCRETE AND MASONRY = 1-7/8" MIN.
INTO WOOD STRUCTURES = 1-1/4" MIN.

SEALANTS:

FRAME AND PANEL CORNERS SEALED WITH TREMCO SPECTRUM 2 OR G.E. SILLGLAZE SEALANT.

Engr: DR. HUMAYOUN FAROOQ
STRUCTURES
FLA. PE # 16557
C.A.N. 3538

JUL 22 2004

AL-FAROOQ CORPORATION
ENGINEERS, PLANNERS & PRODUCT DESIGN
1235 SW 87 AVE
MIAMI, FLORIDA 33174
TEL. (305) 264-8100 FAX. (305) 262-6978
COMP-ANL\W03-65YKK

YKK AP AMERICA INC.
332 FIRETOWER ROAD
DUBLIN, GEORGIA 31021
TEL(478) 277-1955 FAX(478) 277-1978

YSD700 ALUMINUM SLIDING GLASS DOOR (S.M.I.)

revisions:

no	date	by	description
A	10.31.03		REV. PER BCCO COMMENTS
B	12.31.03		NO CHANGE THIS SHEET
C	02.16.04		OXXO DOOR ADD.
D	07.14.04		NO CHANGE THIS SHEET

date: 08-13-03
scale: 3/8" = 1"
dr. by: HAMID
chk. by:

drawing no.
W03-65

sheet 4 of 8

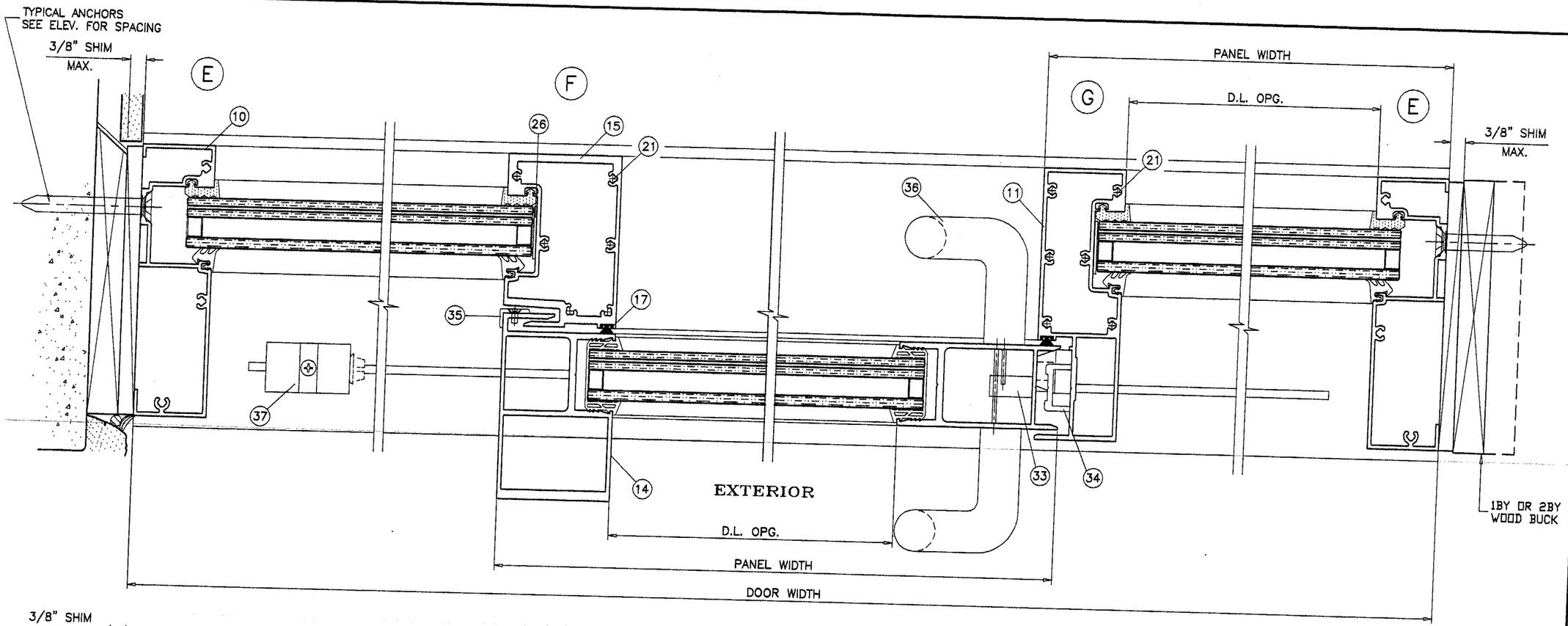

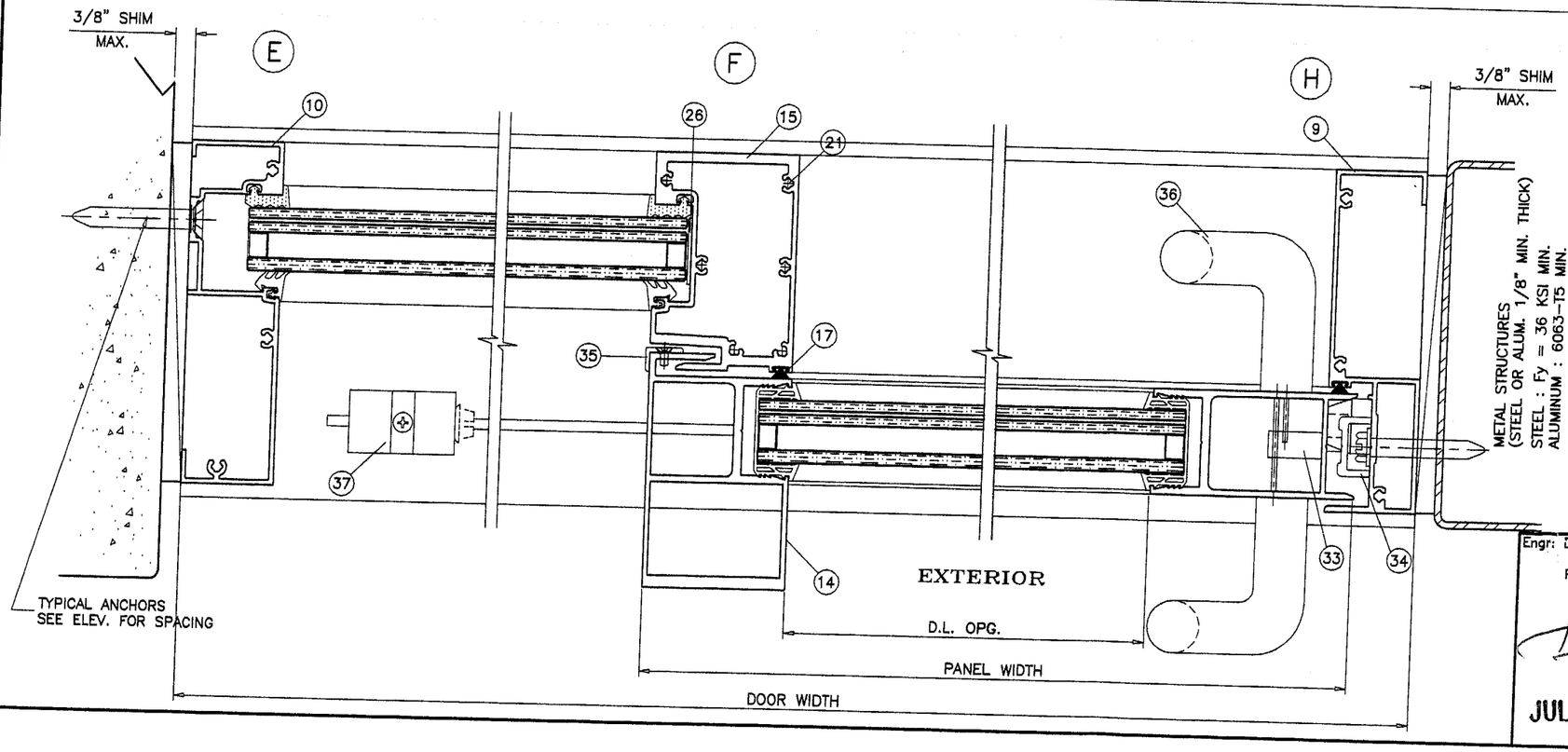

PRODUCT REVISED
as complying with the Florida Building Code
Acceptance No 04-0603.02
Expiration Date APRIL 01, 2009
By Ishaq I. Chanda
Miami Dade Product Control Division

Engr: DR. HUMAYOUN FAROOQ
STRUCTURES
FLA. PE # 18557
C.A.N. 3538

JUL 2 2 2004

AL-FAROOQ CORPORATION
ENGINEERS, PLANNERS & PRODUCT DESIGN
1235 SW 87 AVE
MIAMI, FLORIDA 33174
TEL. (305) 264-8100 FAX. (305) 262-6978
COMP-ANL\W03-65YKK

YSD700 ALUMINUM SLIDING GLASS DOOR (S.M.I.)

YKK AP AMERICA INC.
332 FIRETOWER ROAD
DUBLIN, GEORGIA 31021
TEL(478) 277-1955 FAX(478) 277-1978

revisions:

no	date	by	description
A	10.31.03		REV. PER BCCO COMMENTS
B	12.31.03		NO CHANGE THIS SHEET
C	02.16.04		OXXO DOOR ADD.
D	07.14.04		NO CHANGE THIS SHEET

date: 08-13-03
scale: 3/8" = 1"
dr. by: HAMID
chk. by:

drawing no.
W03-65

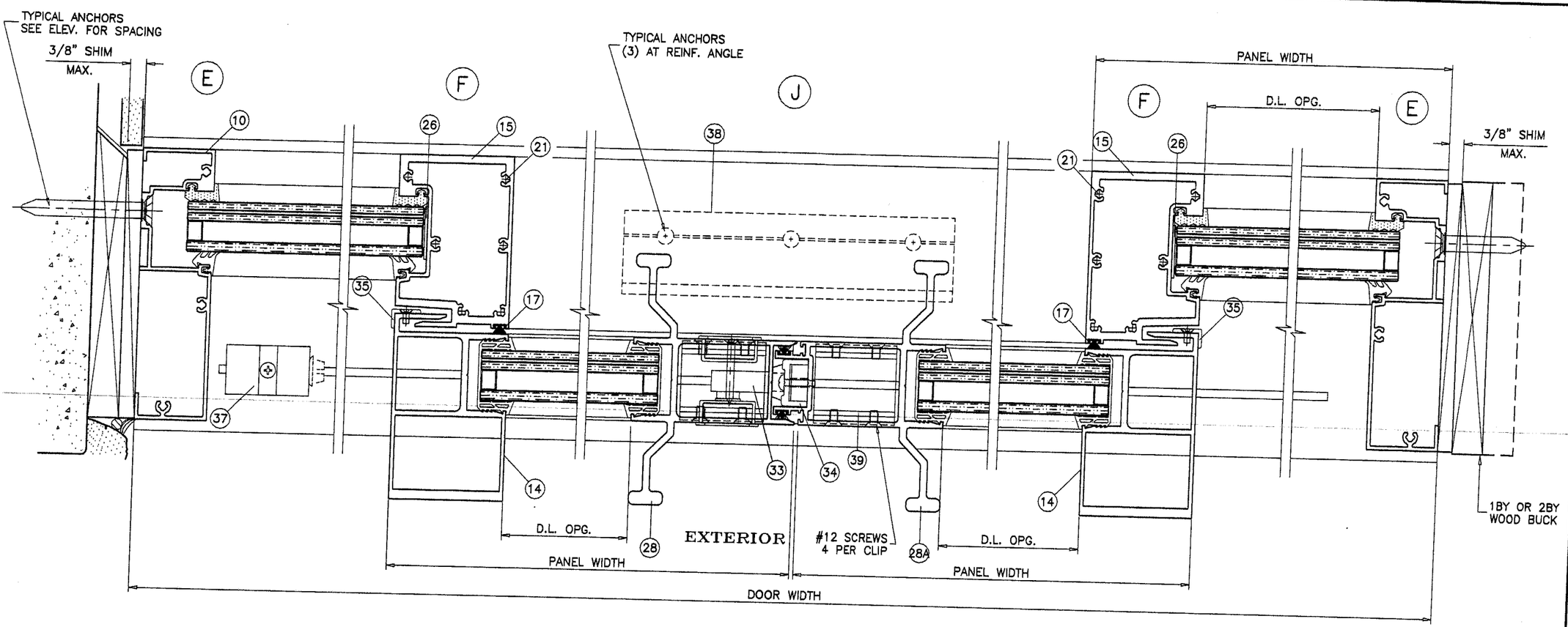

PRODUCT REVISED
as complying with the Florida Building Code
Acceptance No 04-0603-02
Expiration Date APRIL 01, 2009
By Ishwar T. Chand
Miami Dade Product Control Division

Engr: DR. HUMAYOUN FAROOQ
STRUCTURES
FLA. PE # 16557
C.A.N. 3538

JUL 2 2 2004

AL-FAROOQ CORPORATION
ENGINEERS, PLANNERS & PRODUCT DESIGN
1235 SW 87 AVE
MIAMI, FLORIDA 33174
TEL. (305) 264-8100 FAX. (305) 262-6978
COMP-ANL\W03-65YKK

YSD700 ALUMINUM SLIDING GLASS DOOR (S.M.I.)

YKK AP AMERICA INC.
332 FIRETOWER ROAD
DUBLIN, GEORGIA 31021
TEL.(478) 277-1955 FAX(478) 277-1978

revisions:

no	date	by	description
A	10.31.03		REV. PER BCCO COMMENTS
B	12.31.03		NO CHANGE THIS SHEET
C	02.16.04		OXXO DOOR ADD.
D	07.14.04		NO CHANGE THIS SHEET

date: 08-13-03
scale: 3/8" = 1"
dr. by: HAMID
chk. by:

drawing no.
W03-65

sheet 6 of 8

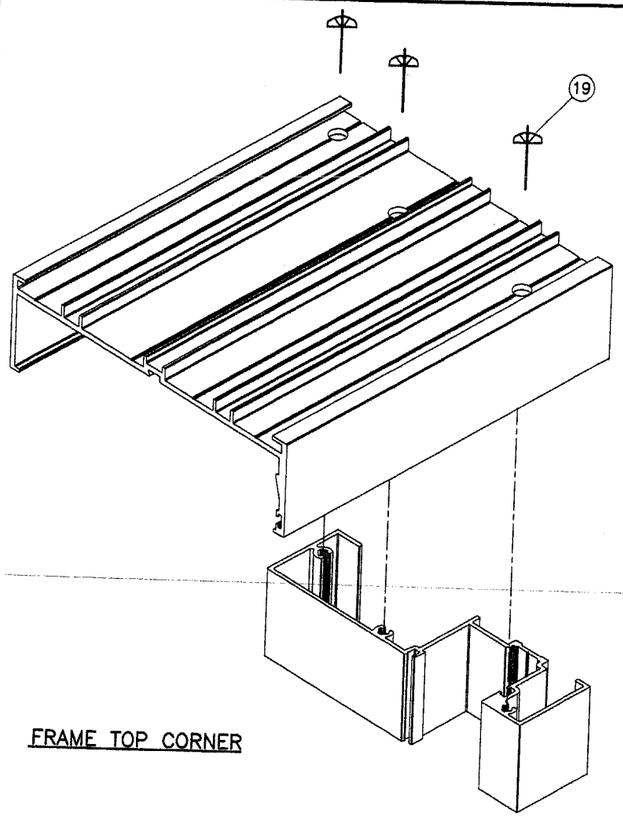

FRAME TOP CORNER

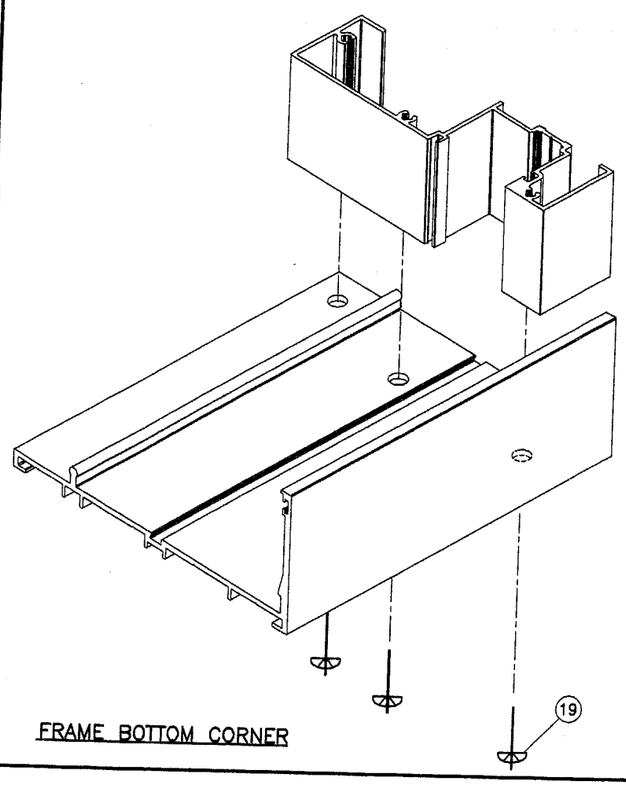

FRAME BOTTOM CORNER

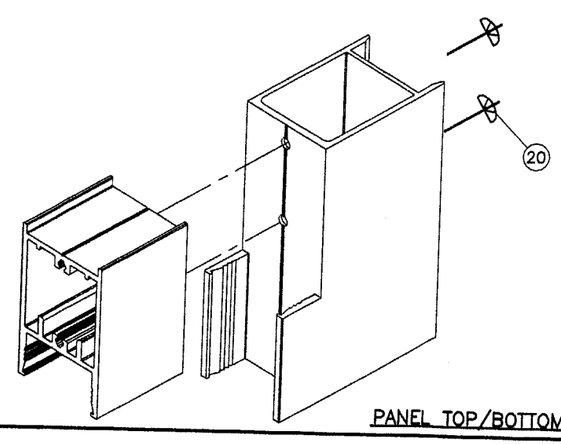

PANEL TOP/BOTTOM CORNER

ITEM #	PART #	QUANTITY	DESCRIPTION	MATERIAL	MANF./SUPPLIER/REMARKS
1	E9-6101	1	FRAME HEAD	6063-T5	YKK AP AMERICA
2	E9-6110	1	HEAD ADAPTER (OPERABLE)	6063-T5	YKK AP AMERICA
3	E9-6107	AS REQD.	HEAD ADAPTER (FIXED)	6063-T5	YKK AP AMERICA
4	E9-6115	1	HEAD ADAPTER (EXTERIOR)	6063-T5	YKK AP AMERICA
5	E9-6109	AS REQD.	GLASS STOP	6063-T5	YKK AP AMERICA
6	E9-6102	1	FRAME SILL	6063-T5	YKK AP AMERICA
7	E9-6111	1	SILL ADAPTER (OPERABLE)	6063-T5	YKK AP AMERICA
8	E9-6108	AS REQD.	SILL ADAPTER (FIXED)	6063-T5	YKK AP AMERICA
9	E9-6104	AS REQD.	FRAME JAMB (OPERABLE)	6063-T5	YKK AP AMERICA
10	E9-6103	1	FRAME JAMB (FIXED)	6063-T5	YKK AP AMERICA
11	E9-6106	1	ASTRAGAL STILE	6063-T5	YKK AP AMERICA
12	E9-6112	2/ PANEL	TOP & BOTTOM RAIL	6063-T5	YKK AP AMERICA
13	E9-6114	1	JAMB STILE	6063-T5	YKK AP AMERICA
14	E9-6113	AS REQD.	INTERLOCK (OPERABLE)	6063-T5	YKK AP AMERICA
15	E9-6105	1	INTERLOCK (FIXED)	6063-T5	YKK AP AMERICA
16	E1-1619	2	SETTING BLOCK CHAIR, 4" LONG	6063-T5	YKK AP AMERICA
17	E2-0712	AS REQD.	PILE W'STRIPPING WITH FIN	–	–
18	E2-0051	AS REQD.	5/16" DIA. BULB W'STRIPPING	–	–
19	#12 X 1-1/4"	3/ CORNER	FRAME ASSEMBLY SCREWS	ST. STEEL	PH SMS
20	#12 X 1-1/4"	2/ CORNER	PANEL ASSEMBLY SCREWS	ST. STEEL	PH SMS
21	#12 X 1-1/4"	6/ END	ASTRAGAL/FIX. I'LOCK. ASSY. SCREWS	ST. STEEL	PH TS
22	E2-0177	AS REQD.	OPER. PANEL SETTING BLOCK	–	–
23	E2-0178	AS REQD.	FIX. PANEL SETTING BLOCK	–	–
24	E2-0361	AS REQD.	OPER. PANEL GLAZING GASKET	–	–
25	E2-0082	AS REQD.	FIX. PANEL GLAZING GASKET	–	–
26	E2-0733	AS REQD.	SIDE BLOCK	–	–
27	E2-0088	AS REQD.	FIX. PANEL GLAZING SPACER	–	–
28	E9-6117	1	FEMALE LOCK STILE	6063-T5	YKK AP AMERICA
28A	E9-6116	1	MALE LOCK STILE	6063-T5	YKK AP AMERICA
29	E1-1601	1	SILL TRACK COVER	ST. STEEL	–
30	E3-1162	2/ MOV. PANEL	FIX. PANEL STOP	POLYAMIDE 6	SECURED W/ (2) #8 X 1/2" PH TS
31	E1-1605	2/ MOV. PANEL	MOV. PANEL BLOCK	6063-T5	SECURED W/ (2) #8 X 1/2" PH TS
32	E1-1620	2/ MOV. PANEL	BALL BEARING ROLLER	ST. STEEL	–
33	MS-1850	1/ MOV. PANEL	MS LOCK ADAMS RITE		SECURED W/ (2) #10 FH SMS
34	E1-1618	1/ MOV. PANEL	STRIKE	–	SECURED W/ (2) #10 X 1-1/4" PH TS
35	E3-1161	1/ MOV. PANEL	PANEL GUIDE	POLYAMIDE 6	SECURED W/ #8 X 1/2" PH TS
36	H1302	1	PULL HANDLE	–	–
37	E2-0709	1/ MOV. PANEL	SILL BUMPER	–	SECURED W/ #10 X 1-1/4" PH TS
38	E1-1623	AS REQD.	REINFORCING ANGLE	6063-T5	AT OXXO DOORS ONLY
39	E1-1622	AS REQD.	REINFORCING CLIP AT SILL LOCATION	6063-T5	AT OXXO DOORS ONLY

PRODUCT REVISED
as complying with the Florida Building Code
Acceptance No 04-0603.02
Expiration Date APRIL 01, 2009
By Ishan J. Chanda
Miami Dade Product Control Division

Engr: DR. HUMAYOUN FAROOQ
STRUCTURES
FLA. PE # 16537
C.A.N. 3538

JUL 2 2 2004

AL-FAROOQ CORPORATION
ENGINEERS, PLANNERS & PRODUCT DESIGN
1235 SW 87 AVE
MIAMI, FLORIDA 33174
TEL. (305) 264-8100 FAX. (305) 262-6978
COMP-ANL\W03-65YKK

YSD700 ALUMINUM SLIDING GLASS DOOR (S.M.I.)

YKK AP AMERICA INC.
332 FIRETOWER ROAD
DUBLIN, GEORGIA 31021
TEL.(478) 277-1955 FAX(478) 277-1978

revisions:

no	date	by	description
A	10.31.03		REV. PER BCCO COMMENTS
B	12.31.03		NO CHANGE THIS SHEET
C	02.16.04		OXXO DOOR ADD.
D	07.14.04		NO CHANGE THIS SHEET

date: 08-13-03
scale: 3/8" = 1"
dr. by: HAMID
chk. by:

drawing no.
W03-65

sheet 7 of 8

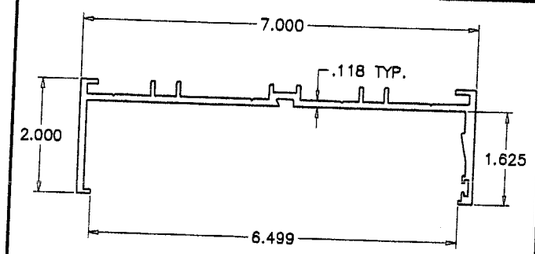

FRAME HEAD

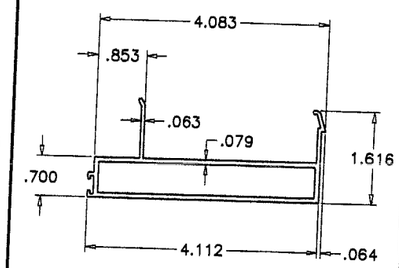

HEAD ADAPTER (OPERABLE)

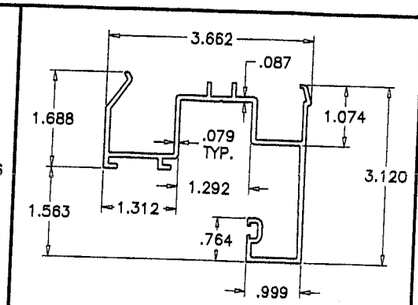

HEAD ADAPTER (FIXED)

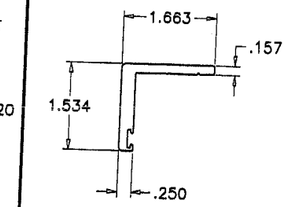

HEAD ADAPTER (EXTERIOR)

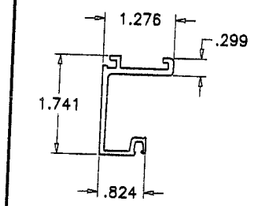

GLASS STOP HEAD

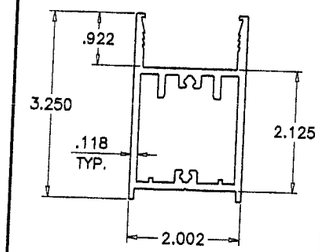

TOP & BOTTOM RAIL

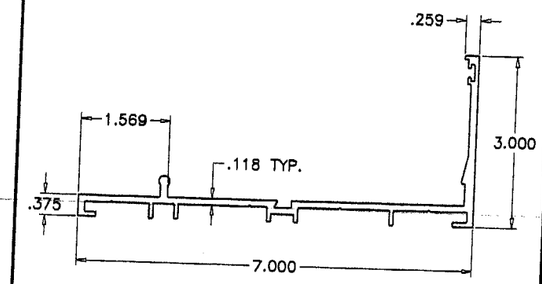

FRAME SILL

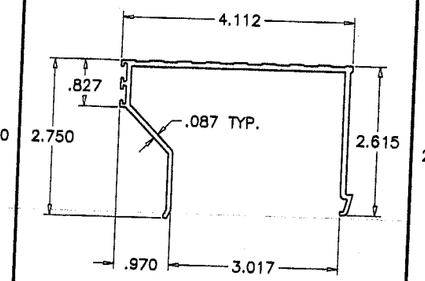

SILL ADAPTER (OPERABLE)

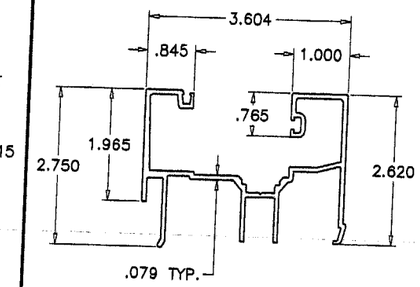

SILL ADAPTER (FIXED)

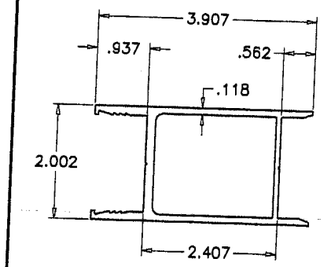

JAMB STILE

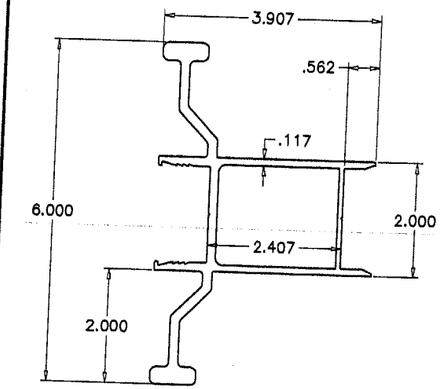

FEMALE LOCK STILE

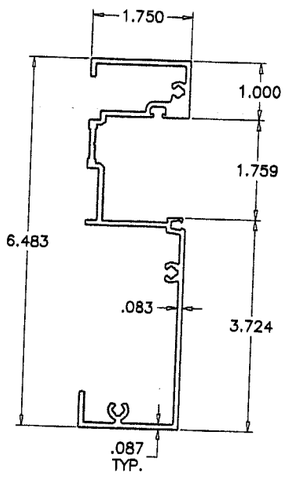

FRAME JAMB (FIXED)

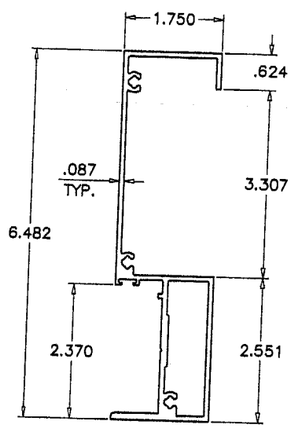

FRAME JAMB (OPERABLE)

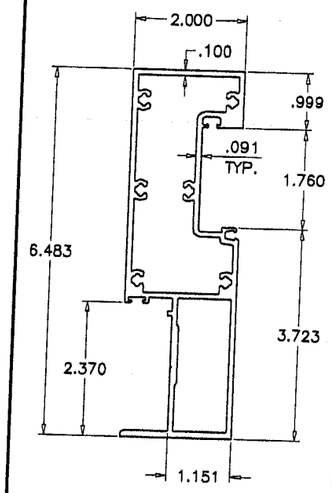

ASTRAGAL STILE

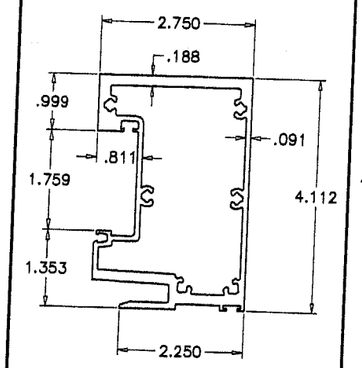

INTERLOCK (FIXED)

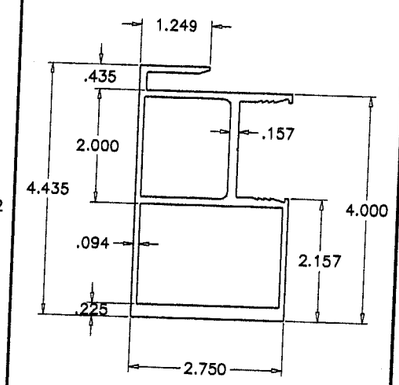

INTERLOCK (OPERABLE)

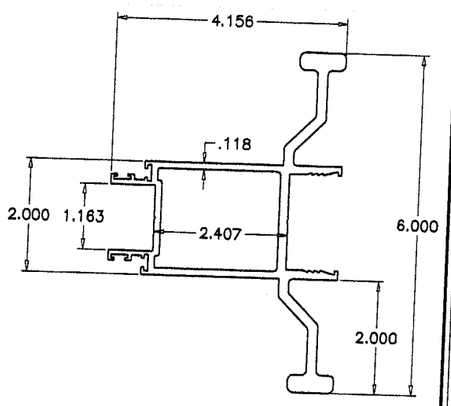

MALE LOCK STILE

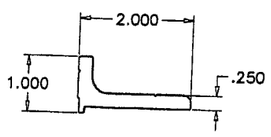

REINFORCING ANGLE

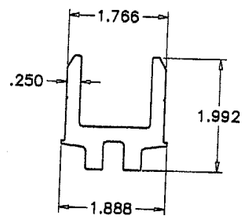

REINFORCING CLIP

PRODUCT REVISED
as complying with the Florida
Building Code
Acceptance No 04-0603.02
Expiration Date APRIL 01, 2009
By Ishaq I. Chanda
Miami Dade Product Control
Division

Engr: DR. HUMAYOUN FAROOQ
STRUCTURES
FLA. PE # 16557
C.A.N. 3538

JUL 2 2 2004

AL-FAROOQ CORPORATION
ENGINEERS, PLANNERS & PRODUCT DESIGN
1235 SW 87 AVE
MIAMI, FLORIDA 33174
TEL. (305) 264-8100 FAX. (305) 262-6978
COMP-ANL\W03-65YKK

YSD700 ALUMINUM SLIDING GLASS DOOR (S.M.I.)

YKK AP AMERICA INC.
332 FIRETOWER ROAD
DUBLIN, GEORGIA 31021
TEL.(478) 277-1955 FAX(478) 277-1978

revisions:

no	date	by	description
A	10.31.03		REV. PER BCCO COMMENTS
B	12.31.03		NO CHANGE THIS SHEET
C	02.16.04		DXXO DOOR ADD.
D	07.14.04		NO CHANGE THIS SHEET

date: 08-13-03
scale: 3/8" = 1"
dr. by: HAMID
chk. by:

drawing no.
W03-65

sheet 8 of 8