MIAMI-DADE

BUILDING CODE COMPLIANCE OFFICE (BCCO)
PRODUCT CONTROL DIVISION

MIAMI-DADE COUNTY, FLORIDA
METRO-DADE FLAGLER BUILDING
140 WEST FLAGLER STREET, SUITE 1603
MIAMI, FLORIDA 33130-1563
(305) 375-2901 FAX (305) 375-2908

NOTICE OF ACCEPTANCE (NOA)

R. C. Aluminum Industries, Inc.
2805 NW 75th Ave.
Miami, FL 33122

SCOPE:

This NOA is being issued under the applicable rules and regulations governing the use of construction materials. The documentation submitted has been reviewed by Miami-Dade County Product Control Division and accepted by the Board of Rules and Appeals (BORA) to be used in Miami Dade County and other areas where allowed by the Authority Having Jurisdiction (AHJ).

This NOA shall not be valid after the expiration date stated below. The Miami-Dade County Product Control Division (In Miami Dade County) and/or the AHJ (in areas other than Miami Dade County) reserve the right to have this product or material tested for quality assurance purposes. If this product or material fails to perform in the accepted manner, the manufacturer will incur the expense of such testing and the AHJ may immediately revoke, modify, or suspend the use of such product or material within their jurisdiction. BORA reserves the right to revoke this acceptance, if it is determined by Miami-Dade County Product Control Division that this product or material fails to meet the requirements of the applicable building code.

This product is approved as described herein, and has been designed to comply with the Florida Building Code, including the High Velocity Hurricane Zone.

DESCRIPTION: Series FX100 Aluminum Fixed Window –L.M.I.

APPROVAL DOCUMENT: Drawing No. **W04-44**, titled "Series FX100 Aluminum Fixed Window (L.M.I.)", sheets 1 through 4 of 4, prepared by AL-Farooq Corporations, dated 05/29/04 with revision **"A"** on 07/09/04, signed and sealed by Humayoun Farooq, P.E., bearing the Miami-Dade County Product Control Approval stamp with the Notice of Acceptance number and approval date by the Miami-Dade County Product Control Division.

MISSILE IMPACT RATING: Large and Small Missile Impact

LABELING: Each unit shall bear a permanent label with the manufacturer's name or logo, city, state and following statement: "Miami-Dade County Product Control Approved", unless otherwise noted herein.

RENEWAL of this NOA shall be considered after a renewal application has been filed and there has been no change in the applicable building code negatively affecting the performance of this product.

TERMINATION of this NOA will occur after the expiration date or if there has been a revision or change in the materials, use, and/or manufacture of the product or process. Misuse of this NOA as an endorsement of any product, for sales, advertising or any other purposes shall automatically terminate this NOA. Failure to comply with any section of this NOA shall be cause for termination and removal of NOA.

ADVERTISEMENT: The NOA number preceded by the words Miami-Dade County, Florida, and followed by the expiration date may be displayed in advertising literature. If any portion of the NOA is displayed, then it shall be done in its entirety.

INSPECTION: A copy of this entire NOA shall be provided to the user by the manufacturer or its distributors and shall be available for inspection at the job site at the request of the Building Official.

This NOA consists of this page 1 and evidence page E-1, and E-2, as well as approval document mentioned above.

The submitted documentation was reviewed by **Herminio F. Gonzalez, P.E., Director, BCCO**

7/28/04

PRODUCT CONTROL ACCEPTED

R.C. Aluminum Industries, Inc.

NOTICE OF ACCEPTANCE: EVIDENCE SUBMITTED

A. DRAWINGS

1. Manufacturer's die drawings and sections.
2. Drawing No. **W04-44**, titled "Series FX100 Aluminum Fixed Window L.M.I.", sheets 1 through 4 of 4, prepared by AL-Farooq, dated 05/29/04, with revision " **A**" on 07/09/04, signed and sealed by Humayoun Farooq, P.E.

B. TESTS

1. Test reports on 1) Air Infiltration Test, per FBC, TAS 202-94
   2) Uniform Static Air Pressure Test, Loading per FBC, TAS 202-94
   3) Water Resistance Test, per FBC, TAS 202-94
   4) Forced Entry Test, per FBC 2411.3.2.1 (b) and TAS 202-94
   along with marked-up drawings and installation diagram of a aluminum fixed window, prepared Hurricane Engineering & Testing Inc., Test Report No. **HETI-03-1346,** dated September 16, 2003, signed and sealed by Rafael E. Droz-Seda, P.E.
2. Test reports on 1) Air Infiltration Test, per FBC, TAS 202-94
   2) Uniform Static Air Pressure Test, Loading per FBC, TAS 202-94
   3) Water Resistance Test, per FBC, TAS 202-94
   4) Forced Entry Test, per FBC 2411.3.2.1 (b) and TAS 202-94
   along with marked-up drawings and installation diagram of a aluminum fixed window, prepared Hurricane Engineering & Testing Inc., Test Report No. **HETI-03-1350,** dated October 16, 2003, signed and sealed by Rafael E. Droz-Seda, P.E.
3. Test reports on 1) Large Missile Impact Test per FBC, TAS 201-94
   2) Cyclic Wind Pressure Loading per FBC, TAS 203-94
   along with marked-up drawings and installation diagram of a aluminum fixed window, prepared Hurricane Engineering & Testing Inc., Test Report No. **HETI-03-1856,** dated September 17, 2003, signed and sealed by Rafael E. Droz-Seda, P.E.
4. Test reports on 1) Large Missile Impact Test per FBC, TAS 201-94
   2) Cyclic Wind Pressure Loading per FBC, TAS 203-94
   along with marked-up drawings and installation diagram of a aluminum fixed window, prepared Hurricane Engineering & Testing Inc., Test Report No. **HETI-03-1859,** dated January 16, 2004, signed and sealed by Rafael E. Droz-Seda, P.E.

C. CALCULATIONS

1. Anchor Calculations, ASTM-E1300, and structural analysis, prepared by AL-Farooq Corporation, dated 05/28/04 signed and sealed by Humayoun Farooq, P.E.

Herminio F. Gonzalez, P.E.
Director, Building Code Compliance Office
NOA No 04-0608.04
Expiration Date: August 19, 2009
Approval Date: August 19, 2004

NOTICE OF ACCEPTANCE: EVIDENCE SUBMITTED

D. QUALITY ASSURANCE

1. Miami Dade Building Code Compliance Office (BCCO).

E. MATERIAL CERTIFICATIONS

1. Notice of Acceptance No. **00-1212.04**, issued to E.I. DuPont DeNemours for "Duponut Butacite ® PVB", approved on 02/15/01 and expiring on 12/11/05.

F. STATEMENTS

1. Statement letter of Compliance, dated May 28, 2004 signed and sealed by Humayoun Farooq, P.E.
2. Statement letter of no financial interest, dated May 28, 2004 signed and sealed by Humayoun Farooq, P.E.

G. OTHER

1. Letter from the consultant stating that the product is in compliance with the Florida Building Code (FBC).

Herminio F. Gonzalez, P.E.
Director, Building Code Compliance Office
NOA No 04-0608.04
Expiration Date: August 19, 2009
Approval Date: August 19, 2004

DESIGN LOAD CAPACITY – PSF			
WINDOW DIMS.		GLASS TYPES 'A' & 'B'	
WIDTH	LENGTH	EXT.(+)	INT.(–)
19–1/8"	38–3/8"	80.0	80.0
24"		80.0	80.0
26–1/2"		80.0	80.0
30"		80.0	80.0
37"		80.0	80.0
42"		77.1	77.1
48"		77.1	77.1
53–1/8"		77.1	77.1
19–1/8"	48"	80.0	80.0
24"		80.0	80.0
26–1/2"		80.0	80.0
30"		80.0	80.0
37"		80.0	80.0
42"		70.5	70.5
48"		61.7	61.7
53–1/8"		61.7	61.7
19–1/8"	50–5/8"	80.0	80.0
24"		80.0	80.0
26–1/2"		80.0	80.0
30"		80.0	80.0
37"		80.0	80.0
42"		70.5	70.5
48"		61.7	61.7
53–1/8"		58.5	58.5
19–1/8"	60"	80.0	80.0
24"		80.0	80.0
26–1/2"		80.0	80.0
30"		80.0	80.0
37"		80.0	80.0
42"		70.5	70.5
19–1/8"	63"	80.0	80.0
24"		80.0	80.0
26–1/2"		80.0	80.0
30"		80.0	80.0
37"		79.3	79.3
42"		70.5	70.5
19–1/8"	66"	80.0	80.0
24"		80.0	80.0
26–1/2"		80.0	80.0
30"		80.0	80.0
37"		75.6	75.6
19–1/8"	72"	80.0	80.0
24"		80.0	80.0
26–1/2"		80.0	80.0
30"		80.0	80.0
37"		67.5	67.5
19–1/8"	74–1/4"	80.0	80.0
24"		80.0	80.0
26–1/2"		80.0	80.0
30"		80.0	80.0
37"		65.5	65.5

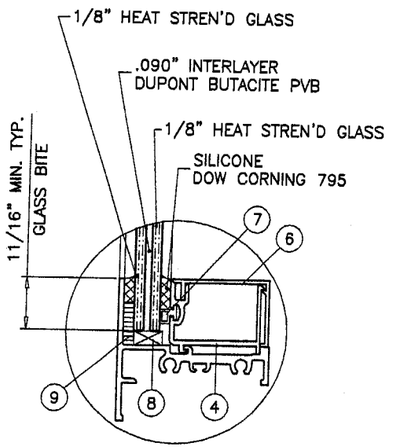

GLASS TYPE 'A'

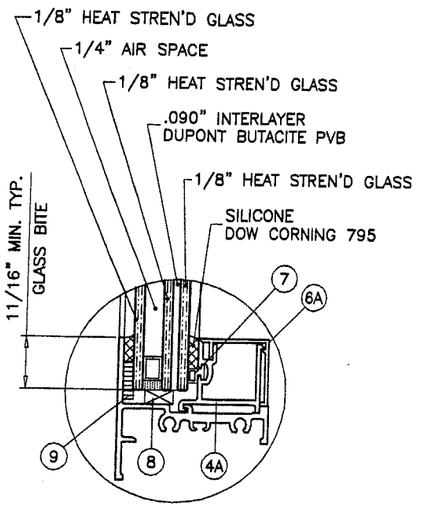

GLASS TYPE 'B'

GLAZING OPTIONS

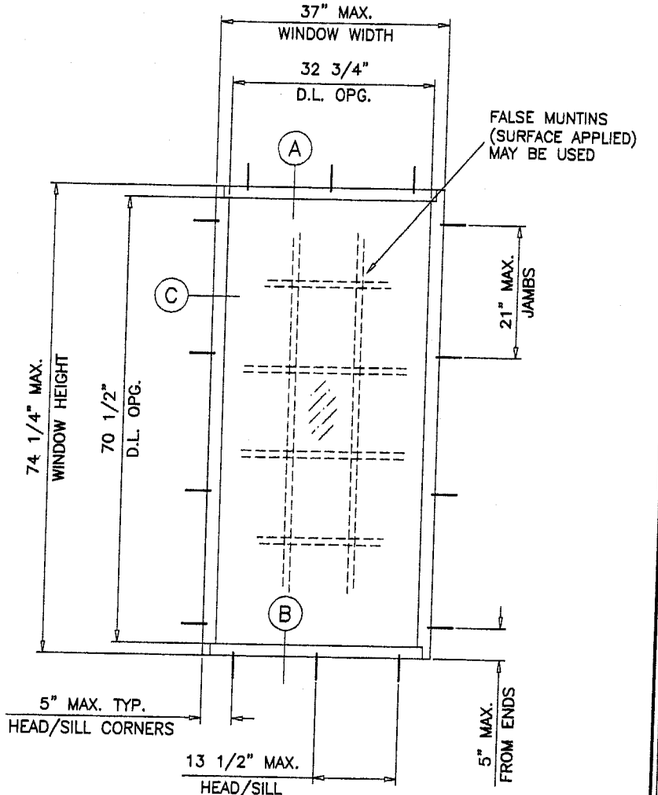

TYPICAL ELEVATION

TESTED UNIT

Approved as complying with the Florida Building Code
Date 08/19/04
NOA# 04-0608.04
Miami Dade Product Control Division
By

WINDOWS GLAZED WITH LAMINATED GLASS RATED FOR LARGE MISSILE IMPACT AND DO NOT REQUIRE SHUTTERS.

FX100 ALUMINUM FIXED WINDOWS

DESIGN LOAD RATING FOR THESE WINDOWS TO BE AS PER CHARTS SHOWN ABOVE.

APPROVAL APPLIES TO SINGLE WINDOWS ALSO SIDE BY SIDE COMBINATIONS OF FIXED/FIXED OR FIXED WITH OTHER WINDOW TYPES IN MODULES OF TWO OR MORE WINDOWS USING MIAMI–DADE COUNTY APPROVED MULLIONS.

THIS PRODUCT IS DESIGNED TO COMPLY WITH THE HIGH VELOCITY HURRICANE ZONE OF THE 2001 FLORIDA BUILDING CODE.

WOOD BUCKS BY OTHERS, MUST BE ANCHORED PROPERLY TO TRANSFER LOADS TO THE STRUCTURE.

ANCHORS SHALL BE AS LISTED, SPACED AS SHOWN ON DETAILS. ANCHOR EMBEDMENT TO BASE MATERIAL SHALL BE BEYOND WALL DRESSING OR STUCCO.

ANCHORING OR LOADING CONDITIONS NOT SHOWN IN THESE DETAILS ARE NOT PART OF THIS APPROVAL.

A 33% INCREASE IN ALLOWABLE STRESS WAS USED IN DESIGN OF ANCHORS.

Engr: DR. HUMAYOUN FAROOQ
STRUCTURES
FLA. PE # 16557
C.A.N. 3538

JUL 15 2004

AL–FAROOQ CORPORATION
ENGINEERS, PLANNERS & PRODUCT DESIGN
1235 SW 87 AVE
MIAMI, FLORIDA 33174
TEL. (305) 264–8100 FAX. (305) 262–6978
COMP–ANL W04–44RC

FX100 ALUMINUM FIXED WINDOW (L.M.I.)

R.C. ALUMINUM INDUSTRIES INC.
2805 N.W. 75 TH AVE.
MIAMI, FL. 33122
TEL. (305) 592–1515 FAX. (305) 592–2184

revisions:

no	date	by	description
A	07.09.04		NO CHANGE THIS SHEET

date: 05–29–04
scale: 1/2"=1'–0"
dr. by: HAMID
chk. by:

drawing no. W04–44

sheet 1 of 4

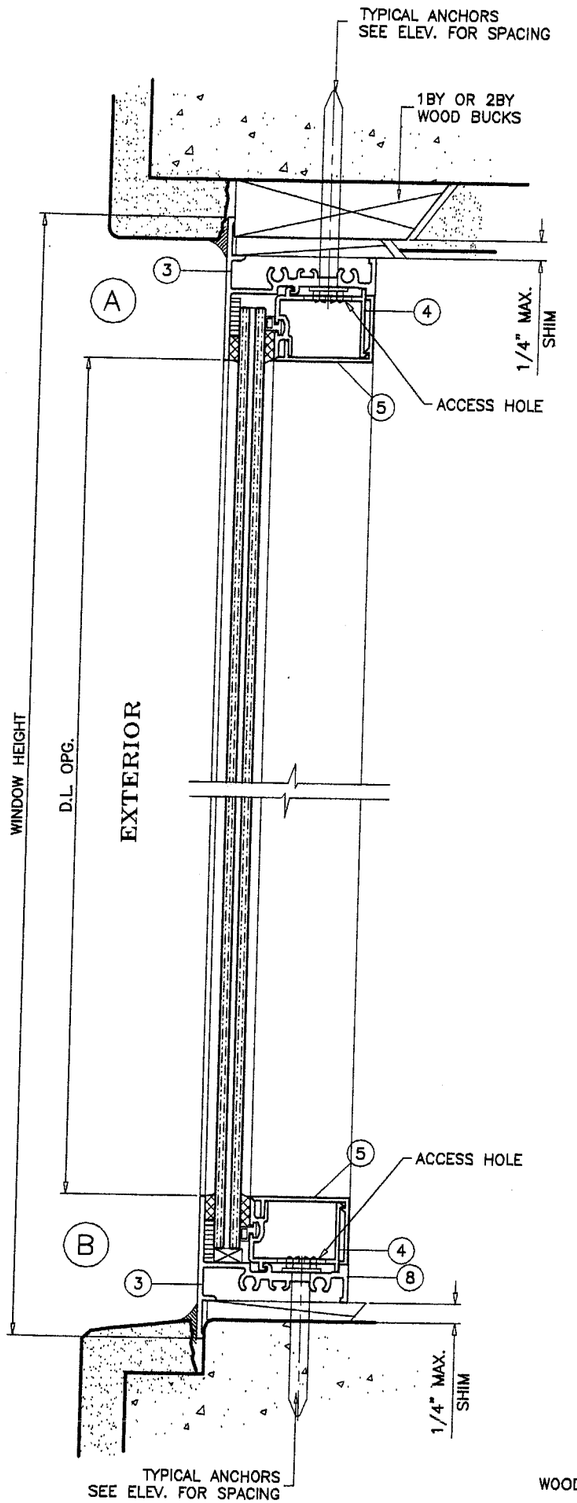

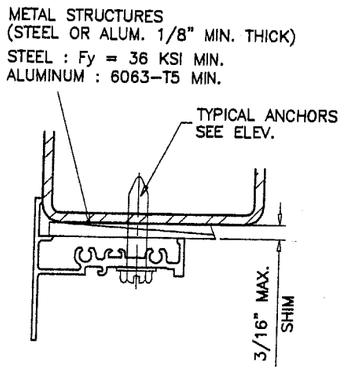

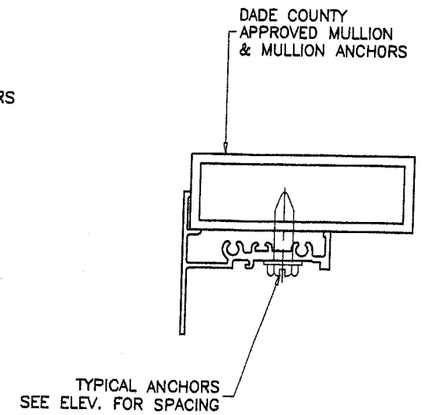

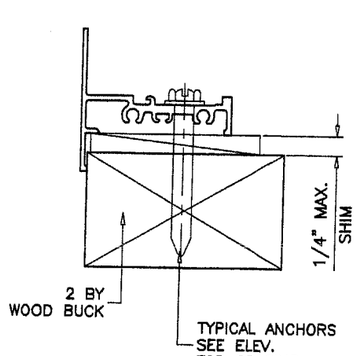

WOOD BUCKS NOT BY RC ALUMINUM, MUST SUSTAIN LOADS IMPOSED BY GLAZING SYSTEM AND TRANSFER THEM TO THE BUILDING STRUCTURE.

TYPICAL ANCHORS: SEE ELEV. FOR SPACING

1/4" HILTI KWIK-CON II

INTO 2BY WOOD BUCKS OR WOOD STRUCTURES
1-3/8" MIN. PENETRATION INTO WOOD

THRU 1BY WOOD BUCKS INTO
3000 PSI MIN. CONC. OR C-90 GROUT FILLED BLOCK
1-1/4" MIN. EMBED INTO CONC. OR MASONRY

1/4" HILTI KWIK-CON II

DIRECTLY INTO
3000 PSI MIN. CONC. OR C-90 GROUT FILLED BLOCK
1-1/4" MIN. EMBED INTO CONC. OR MASONRY

#14 SMS OR 1/4-20 TEKS SELF DRILLING SCREWS

INTO METAL STRUCTURES
(STEEL OR ALUMINUM 1/8" MIN. THICK.)

STEEL : Fy = 36 KSI MIN.
ALUMINUM : 6063-T5 MIN.

TYPICAL EDGE DISTANCE

INTO CONCRETE AND MASONRY = 2" MIN.
INTO WOOD = 1" MIN.

SEALANTS:

ALL FRAME AND VENT CORNERS SEALED WITH JOINT SEALANT.

Approved as complying with the
Florida Building Code
Date 08/19/04
NOA# 04-0608.04
Miami-Dade Product Control
Division
By

Engr: DR. HUMAYOUN FAROOQ
STRUCTURES
FLA. PE # 16557
C.A.N. 3538

JUL 15 2004

AL-FAROOQ CORPORATION
ENGINEERS, PLANNERS & PRODUCT DESIGN
1235 SW 87 AVE
MIAMI, FLORIDA 33174
TEL. (305) 264-8100 FAX. (305) 262-6978

COMP-ANL\W04-44RC

FX100 ALUMINUM FIXED WINDOW (L.M.I.)

R.C. ALUMINUM INDUSTRIES INC.
2805 N.W. 75 TH AVE.
MIAMI, FL. 33122
TEL. (305) 592-1515 FAX. (305) 592-2184

revisions:

no	date	by	description
A	07.09.04		REV. PER BCCO COMMENTS

date: 05-29-04
scale: 1/2" = 1"
dr. by: HAMID
chk. by:

drawing no.
W04-44

sheet 2 of 4

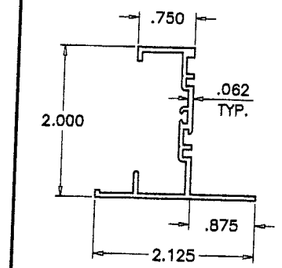

1 FRAME JAMB

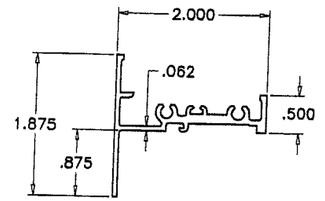

3 FRAME HEAD/SILL

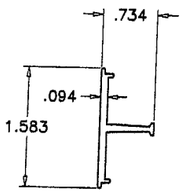

2 JAMB ANCHOR CLIP

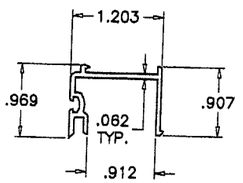

4 GLASS STOP (LAM. GLASS)

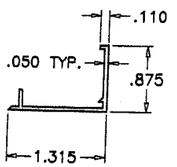

5 SNAP COVER (LAM. GLASS)

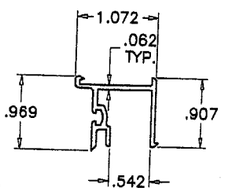

4A GLASS STOP (LAM. INSUL. GLASS)

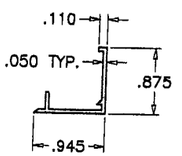

5A SNAP COVER (LAM. INSUL. GLASS)

ITEM NO.	PART NUMBER	QUANTITY	DESCRIPTION	MATERIAL	MANF./SUPPLIER/REMARKS
1	CM100-007	AS REQD.	FRAME JAMB	6063-T6	FOR FIXED WINDOW
2	CM100-012	AS REQD.	JAMB ANCHOR CLIP	6063-T6	–
3	CM100-015	AS REQD.	FRAME HEAD/SILL	6063-T6	–
4	CM100-016	4/ WDW	GLAZING BEAD (LAM. GLASS)	6063-T6	–
4A	CM100-017	4/ WDW	GLAZING BEAD (LAM. INS. GLASS)	6063-T6	–
5	CM100-018	4/ WDW	SNAP COVER (LAM. GLASS)	6063-T6	–
5A	CM100-019	4/ WDW	SNAP COVER (LAM. INSUL. GLASS)	6063-T6	–
6	–	–	–	–	–
7	V-059	AS REQD.	VINYL FOR LAM. & LAM. INSUL. GLASS	PVC	–
8		AS REQD.	3/16" X 3/8" X 4" LG. SETTING BLOCK	–	–
9		AS REQD.	1/8" X 1/2" SINGLE FACE TAPE	–	–
10	#10 X 1"	2/ CORNER	FRAME ASSEMBLY SCREW	ST. STEEL	PH PHL. SMS

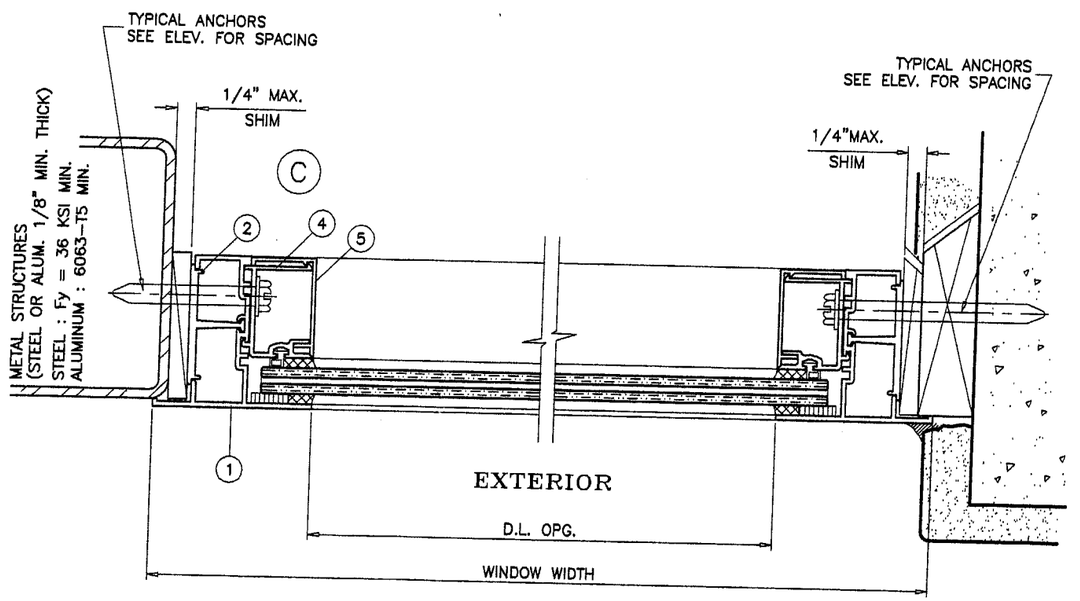

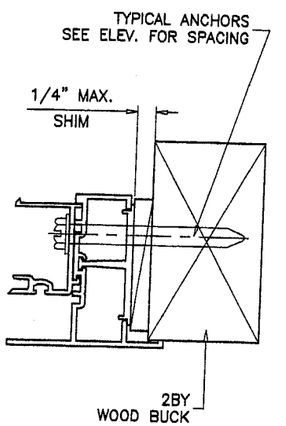

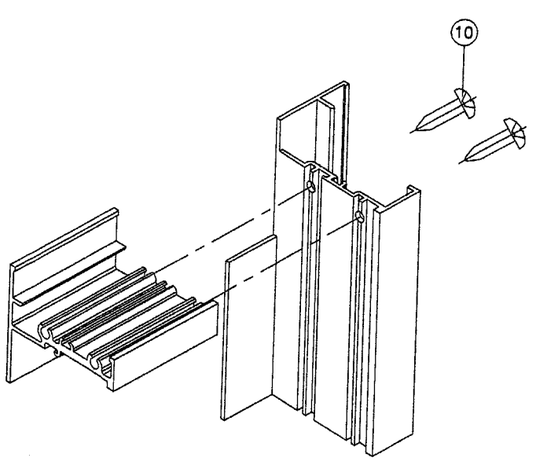

FRAME CORNERS

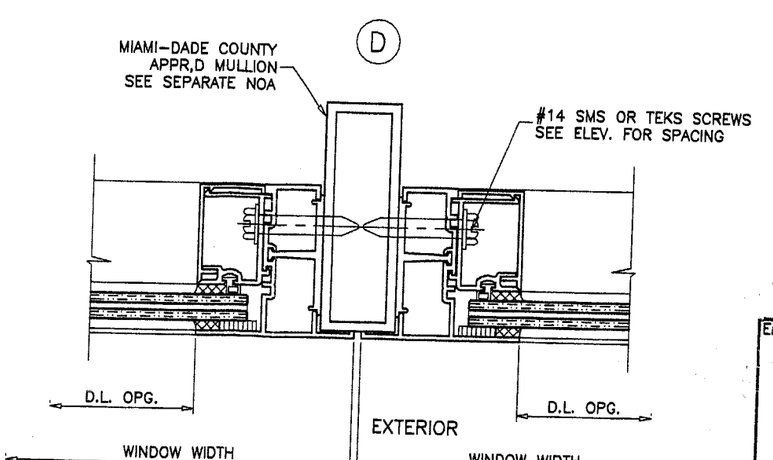

Approved as complying with the Florida Buiding Code
Date 08/19/04
NOA# 04-0608.04
Miami-Dade Product Control Division
By

Engr: DR. HUMAYOUN FAROOQ
STRUCTURES
FLA. PE # 16557
C.A.N. 3538

JUL 15 2004

AL-FAROOQ CORPORATION
ENGINEERS, PLANNERS & PRODUCT DESIGN
1235 SW 87 AVE
MIAMI, FLORIDA 33174
TEL (305) 264-8100 FAX. (305) 262-6978
COMP-ANL\W04-44RC

FX100 ALUMINUM FIXED WINDOW (L.M.I.)

R.C. ALUMINUM INDUSTRIES INC.
2805 N.W. 75 TH AVE.
MIAMI, FL. 33122
TEL (305) 592-1515 FAX. (305) 592-2184

revisions:			
no	date	by	description
A	07.09.04		REV. PER BCCO COMMENTS

date: 05-29-04
scale: 1/2" = 1"
dr. by: HAMID
chk. by:

drawing no.
W04-44

sheet 3 of 4

DESIGN LOAD CAPACITY - PSF SIDE/SIDE OR TOP/BOTTOM WINDOWS					
WINDOW DIMS.		ONE ANCHOR AT EACH SIDE OF MULLION		TWO ANCHORS AT EACH SIDE OF MULLION	
WIDTH (W)	LENGTH (L)	EXT.(+)	1NT.(−)	EXT.(+)	1NT.(−)
19−1/8"	38−3/8"	80.0	80.0	80.0	80.0
24"		80.0	80.0	80.0	80.0
26−1/2"		80.0	80.0	80.0	80.0
30"		80.0	80.0	80.0	80.0
37"		80.0	80.0	80.0	80.0
42"		80.0	80.0	80.0	80.0
48"		80.0	80.0	80.0	80.0
53−1/8"		80.0	80.0	80.0	80.0
19−1/8"	48"	80.0	80.0	80.0	80.0
24"		80.0	80.0	80.0	80.0
26−1/2"		80.0	80.0	80.0	80.0
30"		80.0	80.0	80.0	80.0
37"		80.0	80.0	80.0	80.0
42"		80.0	80.0	80.0	80.0
48"		80.0	80.0	80.0	80.0
53−1/8"		80.0	80.0	80.0	80.0
19−1/8"	50−5/8"	80.0	80.0	80.0	80.0
24"		80.0	80.0	80.0	80.0
26−1/2"		80.0	80.0	80.0	80.0
30"		80.0	80.0	80.0	80.0
37"		80.0	80.0	80.0	80.0
42"		80.0	80.0	80.0	80.0
48"		80.0	80.0	80.0	80.0
53−1/8"		80.0	80.0	80.0	80.0
19−1/8"	60"	80.0	80.0	80.0	80.0
24"		80.0	80.0	80.0	80.0
26−1/2"		80.0	80.0	80.0	80.0
30"		80.0	80.0	80.0	80.0
37"		80.0	80.0	80.0	80.0
42"		75.3	75.3	80.0	80.0
19−1/8"	63"	80.0	80.0	80.0	80.0
24"		80.0	80.0	80.0	80.0
26−1/2"		80.0	80.0	80.0	80.0
30"		80.0	80.0	80.0	80.0
37"		74.9	74.9	80.0	80.0
42"		69.9	69.9	80.0	80.0
19−1/8"	66"	80.0	80.0	80.0	80.0
24"		80.0	80.0	80.0	80.0
26−1/2"		80.0	80.0	80.0	80.0
30"		80.0	80.0	80.0	80.0
37"		70.1	70.1	80.0	80.0
19−1/8"	72"	80.0	80.0	80.0	80.0
24"		80.0	80.0	80.0	80.0
26−1/2"		79.2	79.2	80.0	80.0
30"		72.1	72.1	80.0	80.0
37"		62.3	62.3	70.9	70.9
19−1/8"	74−1/4"	80.0	80.0	80.0	80.0
24"		80.0	80.0	80.0	80.0
26−1/2"		76.3	76.3	80.0	80.0
30"		69.3	69.3	76.4	76.4
37"		59.8	59.8	64.2	64.2

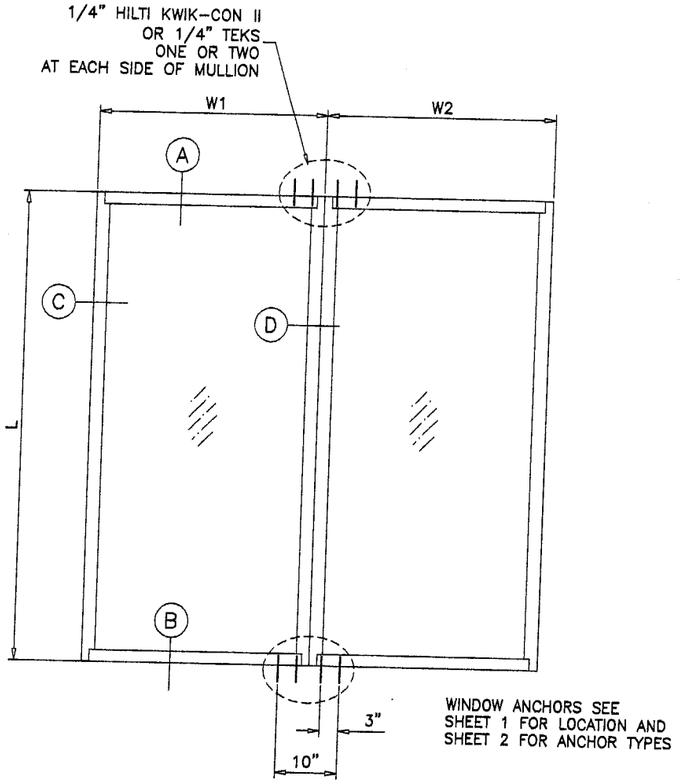

TYPICAL ELEVATIONS
SIDE BY SIDE WINDOWS

SIDE BY SIDE APPLIES TO TWO OR MORE WINDOWS

$$\text{WIDTH (W)} = \frac{W1 + W2}{2}$$

NOTES:

1. USE CHART ON THIS SHEET FOR SIDE BY SIDE CONNECTION CAPACITY OF FIXED WINDOW MULLION.
2. FOR FIXED WINDOW CAPACITY SEE SHEET 1 OF 4.
3. USE SMALLER DESIGN LOAD CAPACITY OF 1 OR 2 ABOVE.

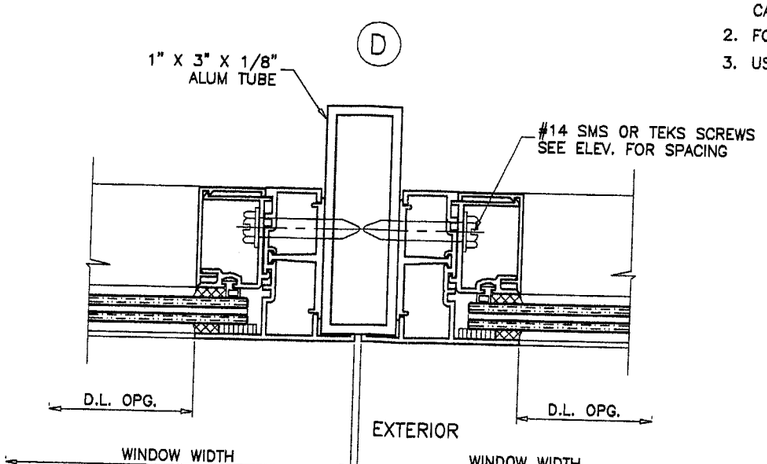

Approved as complying with the Florida Building Code
Date 08/19/04
NOA# 04-0608.04
Miami-Dade Product Control Division
By

Engr: DR. HUMAYOUN FAROOQ
STRUCTURES
FLA. PE # 16557
C.A.N. 3538

JUL 15 2004

AL-FAROOQ CORPORATION
ENGINEERS, PLANNERS & PRODUCT DESIGN
1235 SW 87 AVE
MIAMI, FLORIDA 33174
TEL (305) 264-8100 FAX. (305) 262-6978
COMP-ANL\W04-44RC

FX100 ALUMINUM FIXED WINDOW (L.M.I.)
R.C. ALUMINUM INDUSTRIES INC.
2805 N.W. 75 TH AVE.
MIAMI, FL. 33122
TEL (305) 592-1515 FAX. (305) 592-2184

revisions:			
no	date	by	description
A	07.09.04		NO CHANGE THIS SHEET

date: 05-29-04
scale: 1/2" = 1"
dr. by: HAMID
chk. by:

drawing no.
W04-44