MIAMI-DADE

BUILDING CODE COMPLIANCE OFFICE (BCCO)
PRODUCT CONTROL DIVISION

MIAMI-DADE COUNTY, FLORIDA
METRO-DADE FLAGLER BUILDING
140 WEST FLAGLER STREET, SUITE 1603
MIAMI, FLORIDA 33130-1563
(305) 375-2901 FAX (305) 375-2908

NOTICE OF ACCEPTANCE (NOA)

PGT Industries
1070 Technology Drive
Nokomis, FL 34275

SCOPE:

This NOA is being issued under the applicable rules and regulations governing the use of construction materials. The documentation submitted has been reviewed by Miami-Dade County Product Control Division and accepted by the Board of Rules and Appeals (BORA) to be used in Miami Dade County and other areas where allowed by the Authority Having Jurisdiction (AHJ).

This NOA shall not be valid after the expiration date stated below. The Miami-Dade County Product Control Division (In Miami Dade County) and/or the AHJ (in areas other than Miami Dade County) reserve the right to have this product or material tested for quality assurance purposes. If this product or material fails to perform in the accepted manner, the manufacturer will incur the expense of such testing and the AHJ may immediately revoke, modify, or suspend the use of such product or material within their jurisdiction. BORA reserves the right to revoke this acceptance, if it is determined by Miami-Dade County Product Control Division that this product or material fails to meet the requirements of the applicable building code.

This product is approved as described herein, and has been designed to comply with the Florida Building Code, including the High Velocity Hurricane Zone.

DESCRIPTION: Series SGD-70 Aluminum Sliding Glass Door

APPROVAL DOCUMENT: Drawing No. **4406-2**, titled "Alum Sliding Glass Door-Non- Impact ", sheets 1 through 13 of 13, prepared by manufacture, dated 06/24/04 with revisions 10/10/04, signed and sealed by Lucas A. Turner, P.E., bearing the Miami-Dade County Product Control Approval stamp with the Notice of Acceptance number and approval date by the Miami-Dade County Product Control Division.

MISSILE IMPACT RATING: None

LABELING: Each unit shall bear a permanent label with the manufacturer's name or logo, city, state and following statement: "Miami-Dade County Product Control Approved", unless otherwise noted herein.

RENEWAL of this NOA shall be considered after a renewal application has been filed and there has been no change in the applicable building code negatively affecting the performance of this product.

TERMINATION of this NOA will occur after the expiration date or if there has been a revision or change in the materials, use, and/or manufacture of the product or process. Misuse of this NOA as an endorsement of any product, for sales, advertising or any other purposes shall automatically terminate this NOA. Failure to comply with any section of this NOA shall be cause for termination and removal of NOA.

ADVERTISEMENT: The NOA number preceded by the words Miami-Dade County, Florida, and followed by the expiration date may be displayed in advertising literature. If any portion of the NOA is displayed, then it shall be done in its entirety.

INSPECTION: A copy of this entire NOA shall be provided to the user by the manufacturer or its distributors and shall be available for inspection at the job site at the request of the Building Official.

This NOA consists of this page 1 and evidence pages E-1 and E-2, as well as approval document mentioned above.

The submitted documentation was reviewed by **Herminio F. Gonzalez, P.E., Director, BCCO**

PRODUCT CONTROL ACCEPTED

10/22/04

PGT Industries

NOTICE OF ACCEPTANCE: EVIDENCE SUBMITTED

A. DRAWINGS

1. Manufacturer's die drawings and sections.
2. Drawing No **4406-2**, Sheets 1 through 13 of 13, titled "Alum. Sliding Glass Door Non- Impact", prepared by manufacture, dated 06/24/04 with revisions on 10/10/04, signed and sealed by Lucas A. Turner, P.E.

B. TESTS

1. Test reports on 1) Uniform Static Air Pressure Test, Loading per FBC, TAS 202-94 along with marked-up drawings and installation diagram of an aluminum sliding glass door, prepared by Fenestration Testing Laboratory, Inc., Test Report No. **FTL-4164**, dated 03/25/04, signed and sealed by Edmundo Largespada, P.E.
2. Test reports on 1) Uniform Static Air Pressure Test, Loading per FBC, TAS 202-94 along with marked-up drawings and installation diagram of an aluminum sliding glass door, prepared by Fenestration Testing Laboratory, Inc., Test Report No. **FTL-4168**, dated 03/25/04, signed and sealed by Edmundo Largespada, P.E.
3. Test reports on 1) Uniform Static Air Pressure Test, Loading per FBC, TAS 202-94 along with marked-up drawings and installation diagram of an aluminum sliding glass door, prepared by Fenestration Testing Laboratory, Inc., Test Report No. **FTL-4169**, dated 03/25/04, signed and sealed by Edmundo Largespada, P.E.
4. Test reports on 1) Air Infiltration Test, per FBC, TAS 202-94
   2) Uniform Static Air Pressure Test, Loading per FBC, TAS 202-94
   3) Water Resistance Test, per FBC, TAS 202-94
   4) Forced Entry Test, per FBC 2411 3.2.1 (b) and TAS 202-94

   along with marked-up drawings and installation diagram of an aluminum sliding glass door, prepared by Fenestration Testing Laboratory, Inc., Test Report No. **FTL-4173**, dated 04/02/04, signed and sealed by Edmundo Largespada, P.E.
5. Test reports on 1) Uniform Static Air Pressure Test, Loading per FBC, TAS 202-94 along with marked-up drawings and installation diagram of an aluminum sliding glass door, prepared by Fenestration Testing Laboratory, Inc., Test Report No. **FTL-4174**, dated 03/31/04, signed and sealed by Edmundo Largespada, P.E.

C. CALCULATIONS

1. Anchor Calculations, ASTM-E 1300, and structural analysis, prepared by PGT Engineering, dated 06/25/04, signed and sealed by Lucas A. Turner, P.E.
2. Revised Anchor Calculations, and structural analysis, prepared by PGT Engineering, dated 10/08/04, signed and sealed by Lucas A. Turner, P.E.

D. QUALITY ASSURANCE

1. Miami Dade Building Code Compliance Office (BCCO).

Herminio F. Gonzalez, P.E.
Director, Building Code Compliance Office
NOA No 04-0629.02
Expiration Date: November 11, 2009
Approval Date: November 11, 2004

NOTICE OF ACCEPTANCE: EVIDENCE SUBMITTED

E. MATERIAL CERTIFICATIONS

1. None.

F. STATEMENTS

1. Statement letter of conformance and no financial letter, dated 06/25/04, signed and sealed by Lucas A. Turner, P.E.

G. OTHER

1. Letter from the consultant stating that the product is in compliance with the Florida Building Code (FBC)

For:

Herminio F. Gonzalez, P.E.
Director, Building Code Compliance Office
NOA No 04-0629.02
Expiration Date: November 11, 2009
Approval Date: November 11, 2004

GENERAL NOTES: NON-IMPACT SLIDING GLASS DOOR

1. GLAZING OPTIONS:

   A. 3/16" TEMPERED GLASS. TEST REPORT FTL-4173.

   B. 1/4" TEMPERED GLASS. TEST REPORTS FTL-4168 AND FTL-4172.

   C. 13/16" INSULATED GLASS (I.G.); (2) LITES OF 3/16" TEMPERED GLASS WITH A 7/16" AIR SPACE. TEST REPORTS FTL-4164, FTL-4169 AND FTL-4174.

2. CONFIGURATIONS: SEE SHEET 5.

3. DESIGN PRESSURES: SEE TABLE 1, SHEET 2.

   A. NEGATIVE DESIGN LOADS BASED ON TESTED PRESSURE AND GLASS TABLES ASTM E 1300-98 (ASTM E 1300-94 OUTSIDE MIAMI-DADE COUNTY).

   B. POSITIVE DESIGN LOADS BASED ON WATER TEST PRESSURE AND GLASS TABLES ASTM E 1300-98 (ASTM E 1300-94 OUTSIDE MIAMI-DADE COUNTY).

4. FOR MIAMI-DADE COUNTY ANCHORAGE REQUIREMENTS, SEE SHEETS 12 AND 13.

5. FOR ANCHORAGE REQUIREMENTS OUTSIDE MIAMI-DADE COUNTY, REFER TO APPLICABLE TEST REPORT.

6. MIAMI-DADE COUNTY APPROVED SHUTTERS ARE REQUIRED IN MIAMI-DADE COUNTY AND WHERE IMPACT RESISTANCE IS REQUIRED..

7. INSTALLATION SCREWS, FRAME AND PANEL CORNERS SEALED WITH SCHNEE/MOREHEAD SEAM SEALER.

8. REFERENCE TEST REPORTS: FTL-4164, FTL-4168, FTL-4169, FTL-4172, FTL-4173 AND FTL-4174.

NOA DRAWING MAP

	SHEET
GENERAL NOTES	1
GLAZING DETAILS	1
DESIGN PRESSURES	2
ELEVATIONS	3-4
CONFIGURATIONS	5
VERT. SECTIONS	6
HORIZ. SECTIONS	7-8
PARTS LIST	9
EXTRUSIONS	10-11
ANCHORAGE	12-13

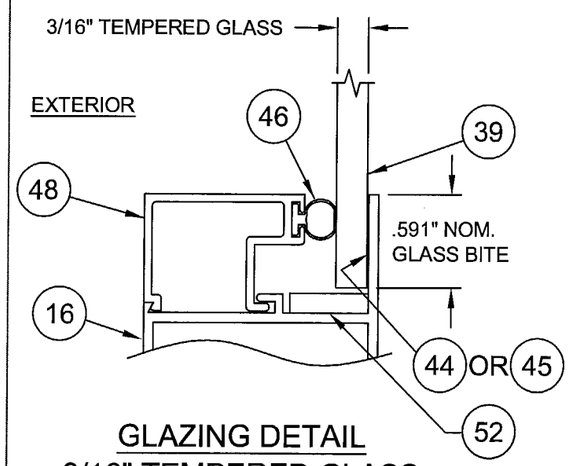

GLAZING DETAIL
3/16" TEMPERED GLASS

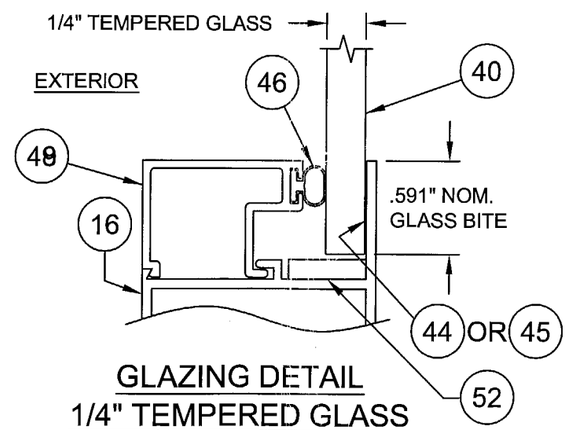

GLAZING DETAIL
1/4" TEMPERED GLASS

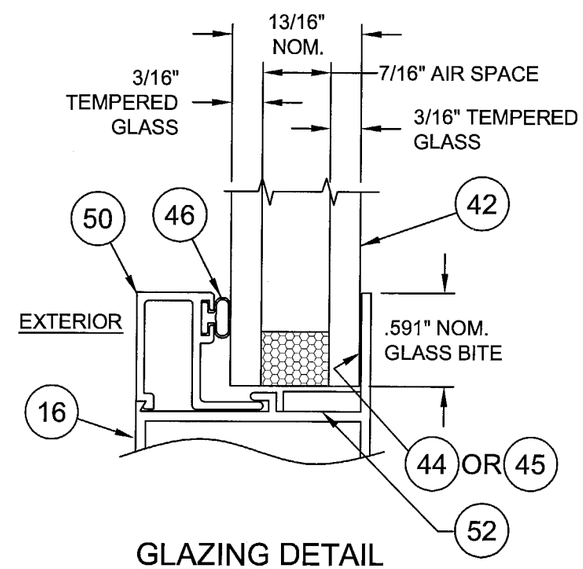

GLAZING DETAIL
13/16" I.G. GLASS

Approved as complying with the Florida Building Code
Date 11/11/04
NOA# 04-0629.02
Miami Dade Product Control Division
By [signature]

L.A.T.
10/8/04

Revsd By:	Date:	Revisions:	
F.K.	10/1/04	A	NO CHANGE THIS SHEET
Revsd By:	Date:	Revisions:	
Revsd By:	Date:	Revisions:	
Drawn By: F.K.	Date: 6/24/04	Checked By:	Date:

1070 TECHNOLOGY DRIVE
NOKOMIS, FL 34275

P.O. BOX 1529
NOKOMIS, FL 34274

PGT Visibly Better

Description: NOTES, GLAZING DETAILS & MAP

Title: ALUM. SLIDING GLASS DOOR, NON-IMPACT

Series/Model:	Scale:	Sheet:	Drawing No.	Rev:
SGD-70	NTS	1 of 13	4406-2	A

Lucas A. Turner, P.E.
PE #58201
Mechanical

COMPARATIVE ANALYSIS:
EXTENDED SILL, 3 1/2" HIGH

A. FTL-4173; 3/16" TEMPERED
B. FTL-4168, 4172; 1/4" TEMPERED
C. FTL-4164, 4169, 4174; 13/16" TEMPERED I.G.

NOM. PANEL WIDTH		DOOR HEIGHT								
		72" (6^0)	80" (6^8)	84" (7^0)	90" (7^6)	96" (8^0)	102" (8^6)	108" (9^0)	114" (9^6)	120" (10^0)
24" (2^0)	A	+90.0 -150.0	+90.0 -150.0	+90.0 -150.0	+90.0 -150.0	+90.0 -150.0				
	B	+90.0 -150.0	+90.0 -150.0	+90.0 -150.0	+90.0 -150.0	+90.0 -150.0	+90.0 -128.0	+90.0 -120.0	+90.0 -112.9	+90.0 -106.7
	C	+90.0 -150.0	+90.0 -150.0	+90.0 -150.0	+90.0 -150.0	+90.0 -150.0	+90.0 -128.0	+90.0 -120.0	+90.0 -112.9	+90.0 -106.7
30" (2^6)	A	+90.0 -150.0	+90.0 -143.2	+90.0 -140.5	+90.0 -137.6	+90.0 -128.0				
	B	+90.0 -150.0	+90.0 -150.0	+90.0 -150.0	+90.0 -138.2	+90.0 -128.0	+90.0 -105.9	+90.0 -99.1	+90.0 -93.1	+87.8 -87.8
	C	+90.0 -150.0	+90.0 -150.0	+90.0 -150.0	+90.0 -138.2	+90.0 -128.0	+90.0 -105.9	+90.0 -99.1	+90.0 -93.1	+87.8 -87.8
36" (3^0)	A	+90.0 -131.2	+90.0 -116.7	+90.0 -110.1	+90.0 -101.8	+90.0 -95.2				
	B	+90.0 -150.0	+90.0 -139.4	+90.0 -130.9	+90.0 -120.0	+90.0 -110.8	+90.0 -91.4	+85.3 -85.3	+80.0 -80.0	+75.3 -75.3
	C	+90.0 -150.0	+90.0 -139.4	+90.0 -130.9	+90.0 -120.0	+90.0 -110.8	+90.0 -91.4	+85.3 -85.3	+80.0 -80.0	+75.3 -75.3
42" (3^6)	A	+90.0 -117.6	+90.0 -109.2	+90.0 -102.3	+90.0 -92.4	+83.7 -83.7				
	B	+90.0 -117.6	+90.0 -117.6	+90.0 -117.6	+90.0 -107.3	+90.0 -98.7	+78.4 -78.4	+75.7 -75.7	+70.8 -70.8	+66.5 -66.5
	C	+90.0 -129.4	+90.0 -117.6	+90.0 -117.6	+90.0 -107.3	+90.0 -98.7	+78.4 -78.4	+75.7 -75.7	+70.8 -70.8	+66.5 -66.5
48" (4^0)	A	+90.0 -90.0	+90.0 -90.0	+90.0 -90.0	+88.1 -88.1	+81.5 -81.5				
	B	+90.0 -90.0	+90.0 -90.0	+90.0 -90.0	+90.0 -90.0	+90.0 -90.0	+60.0 -60.0	+60.0 -60.0	+60.0 -60.0	+60.0 -60.0
	C	+90.0 -109.4	+90.0 -103.1	+90.0 -96.3	+90.0 -90.0	+90.0 -90.0	+60.0 -60.0	+60.0 -60.0	+60.0 -60.0	+60.0 -60.0
54" (4^6)	A									
	B	+86.4 -86.4	+86.4 -86.4	+86.4 -86.4	+81.5 -81.5	+74.4 -74.4				
	C	+86.4 -86.4	+86.4 -86.4	+86.4 -86.4	+81.5 -81.5	+74.4 -74.4				
60" (5^0)	A									
	B	+70.0 -70.0	+70.0 -70.0	+70.0 -70.0	+70.0 -70.0	+70.0 -70.0				
	C	+70.0 -70.0	+70.0 -70.0	+70.0 -70.0	+70.0 -70.0	+70.0 -70.0				

TABLE 1.

NOTES:
1. STANDARD 2 7/16" SILL LIMITS POSITIVE DESIGN PRESSURE TO +40.0 PSF FOR ALL SIZES AND CONFIGURATIONS. NEGATIVE PRESSURES ARE UNCHANGED.
2. REINFORCEMENTS NOT REQUIRED IN DOOR PANELS WITH GLASS TYPE C WHEN PANEL WIDTH IS 48" OR LESS, IN DOORS 96" HIGH OR LESS, PER TEST REPORT FTL-4164. REINFORCEMENTS ARE REQUIRED FOR ALL OTHER GLASS TYPES AND SIZE CONFIGURATIONS.

Approved as complying with the Florida Building Code
Date 11/11/04
NOA# 04-0629.02
Miami-Dade Product Control Division
By

L. T.
10/8/04

Revsd By:	Date:	Revisions:	
F.K.	10/1/04	A	NO CHANGE THIS SHEET
Revsd By:	Date:	Revisions:	
Revsd By:	Date:	Revisions:	
Drawn By: F.K.	Date: 6/24/04	Checked By:	Date:

1070 TECHNOLOGY DRIVE
NOKOMIS, FL 34275

P.O. BOX 1529
NOKOMIS, FL 34274

PGT Visibly Better

Description: DESIGN PRESSURES, STD & EXTENDED SILL
Title: ALUM. SLIDING GLASS DOOR, NON-IMPACT

Series/Model:	Scale:	Sheet:	Drawing No.	Rev:
SGD-70	NTS	2 of 13	4406-2	A

Lucas A. Turner, P.E.
PE #58201
Mechanical

NOTES: 1. SEE SECTIONS ON SHEETS 6, 7 AND 8.
2. FOR APPROVED CONFIGURATIONS SEE SHEET 5.
3. FOR ANCHORAGE SEE NOTES 4 AND 5, SHEET 1.

MAX.WIDTH TABLE	
CONFIG.	DIM.
pX or Xp	49 1/8"
OX or XO	96 13/16"
XX	96 13/16"
pXX or XXp	96 1/4"
pXXp	101 1/8"
OXO	149 3/8"
XXO or OXX	149 3/8"
pXXO or OXXp	148 13/16"
XOX	144"
OOO	144"
OXXO	196 9/16"
pXXXO or OXXXp	196"
XXXX	196 9/16"
pXXXX or XXXXp	196"
pXXXXp	195 1/2"
OOOO	196 9/16"

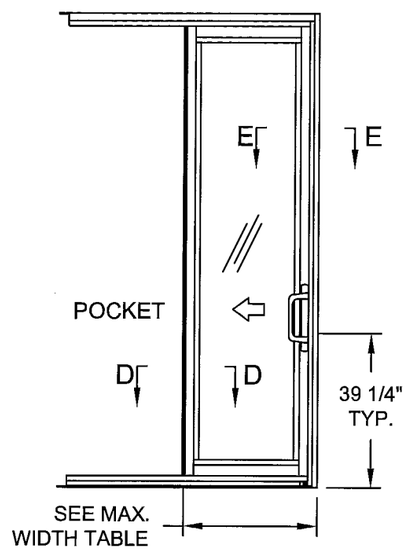

pX OR Xp

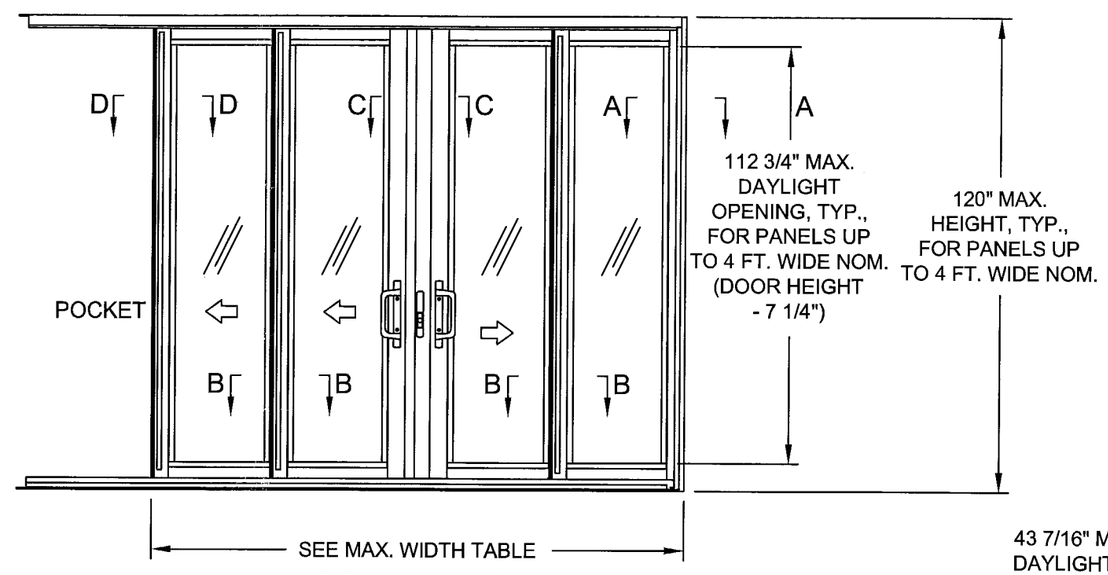

pXXXO OR OXXXp

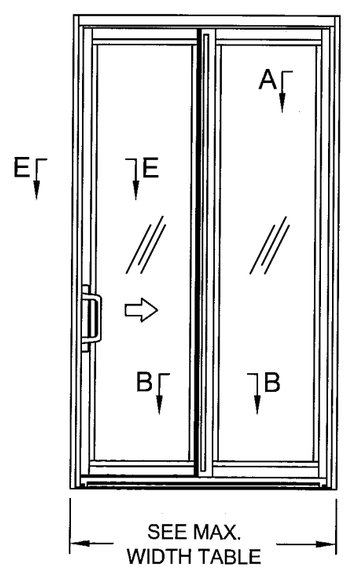

XO OR OX

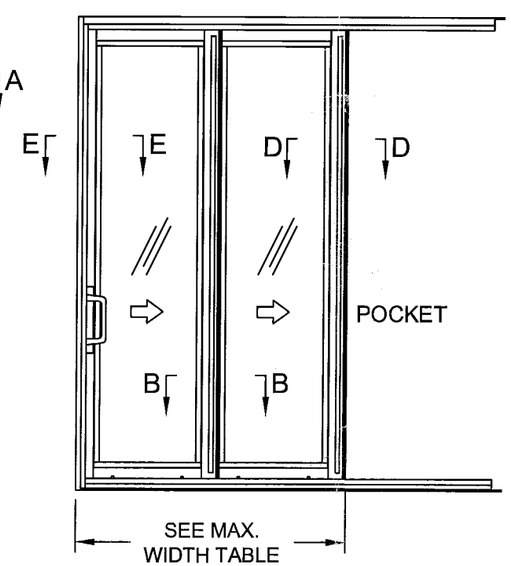

XXp OR pXX

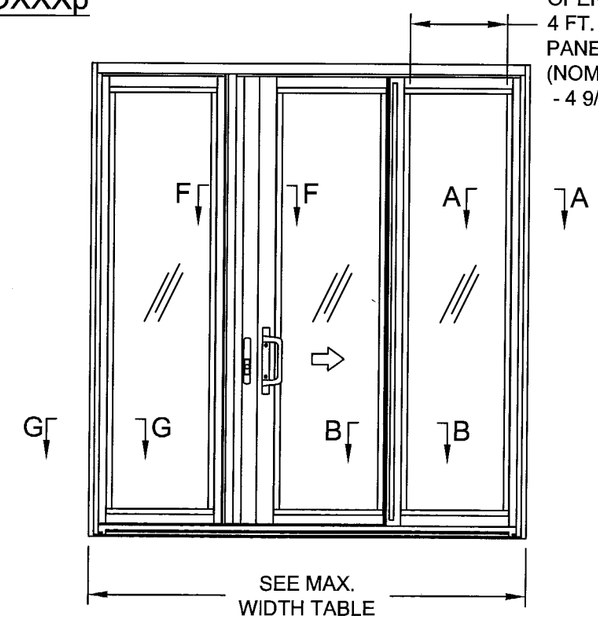

OXO

Approved as complying with the Florida Building Code
Date 11/11/04
NOA# 04-0629.02
Miami Dade Product Control Division
By:

L a I
10/8/04

Lucas A. Turner, P.E.
PE #58201
Mechanical

Revsd By:	Date:	Revisions:	
F.K.	10/1/04	A	NO CHANGE THIS SHEET
Revsd By:	Date:	Revisions:	
Revsd By:	Date:	Revisions:	
Drawn By: F.K.	Date: 6/24/04	Checked By:	Date:

1070 TECHNOLOGY DRIVE
NOKOMIS, FL 34275

P.O. BOX 1529
NOKOMIS, FL 34274

PGT Visibly Better

Description: EXAMPLE ELEVATIONS, NOM. 4 FT. WIDE PANELS

Title: ALUM. SLIDING GLASS DOOR, NON-IMPACT

Series/Model:	Scale:	Sheet:	Drawing No.	Rev:
SGD-70	NTS	3 of 13	4406-2	A

NOTES: 1. SEE SECTIONS ON SHEETS 6, 7 AND 8.
2. FOR APPROVED CONFIGURATIONS SEE SHEET 5.
3. FOR ANCHORAGE SEE NOTES 4 AND 5, SHEET 1.

MAX.WIDTH TABLE	
CONFIG.	DIM.
pX or Xp	61 1/8"
OX or XO	120 13/16"
XX	120 13/16"
pXX or XXp	120 1/4"
pXXp	125 1/8"
OXO	185 3/8"
XXO or OXX	185 3/8"
pXXO or OXXp	184 13/16"
XOX	180"
OOO	180"
OXXO	244 9/16"
pXXXO or OXXXp	244"
XXXX	244 9/16"
pXXXX or XXXXp	244"
pXXXXp	243 1/2"
OOOO	244 9/16"

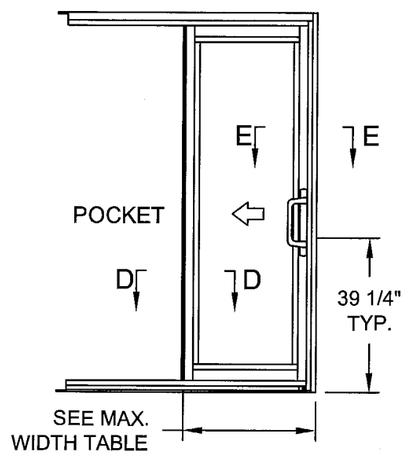

pX OR Xp

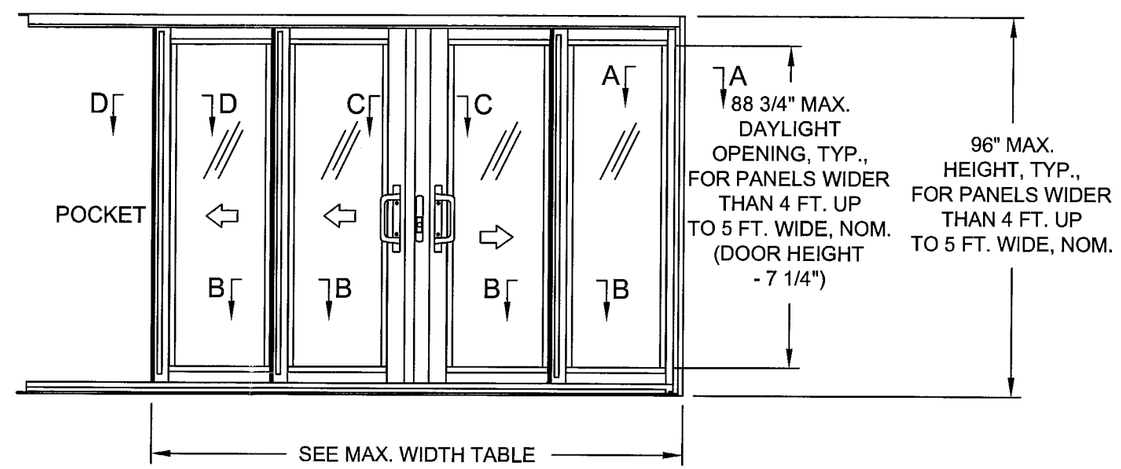

pXXXO OR OXXXp

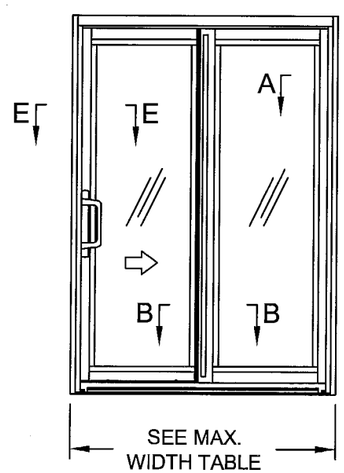

XO OR OX

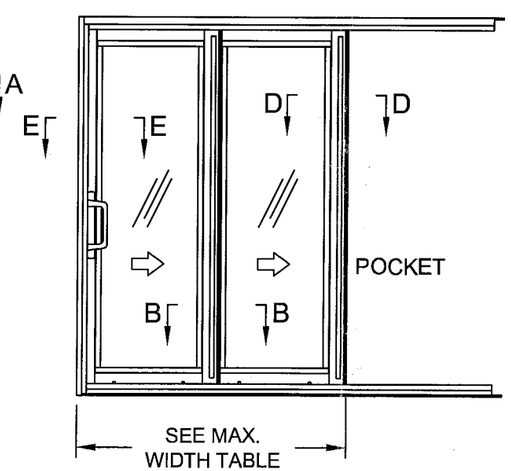

XXp OR pXX

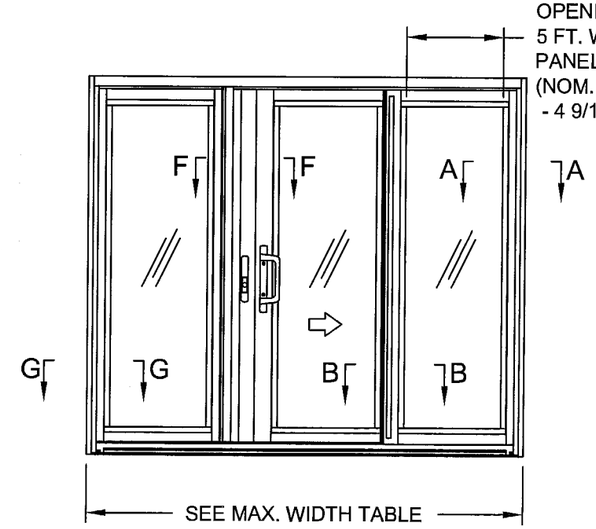

OXO

Approved as complying with the Florida Building Code
Date 11/11/04
NOA# 04-0629.02
Miami Dade Product Control Division
By

10/8/04

Lucas A. Turner, P.E.
PE #58201
Mechanical

Revsd By:	Date:	Revisions:	
F.K.	10/1/04	A	NO CHANGE THIS SHEET
Revsd By:	Date:	Revisions:	
Revsd By:	Date:	Revisions:	
Drawn By: F.K.	Date: 6/24/04	Checked By:	Date:

1070 TECHNOLOGY DRIVE
NOKOMIS, FL 34275

P.O. BOX 1529
NOKOMIS, FL 34274

PGT Visibly Better

Description: EXAMPLE ELEVATIONS, 5 FT. WIDE NOM. PANELS

Title: ALUM. SLIDING GLASS DOOR, NON-IMPACT

Series/Model:	Scale:	Sheet:	Drawing No.	Rev:
SGD-70	NTS	4 of 13	4406-2	A

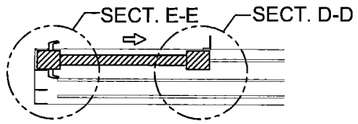

X POCKET, Xp (SHOWN) OR pX

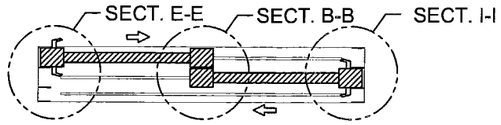

XX

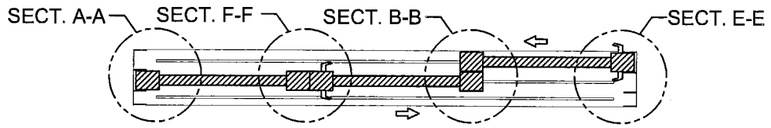

OXX (SHOWN) OR XXO

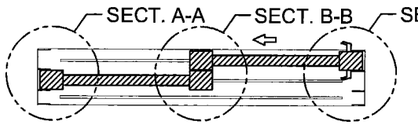

OX (SHOWN) OR XO

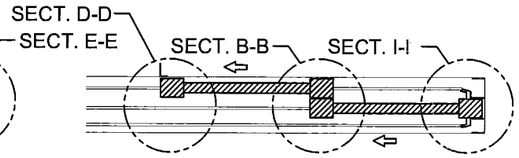

XX POCKET, pXX (SHOWN) OR XXp

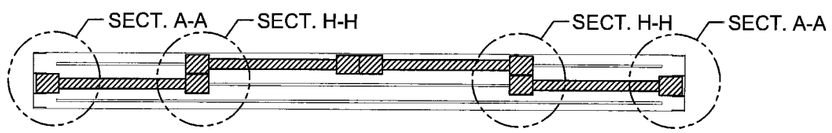

OOOO ALL FIXED

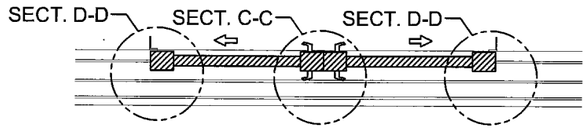

XX DOUBLE POCKET, pXXp

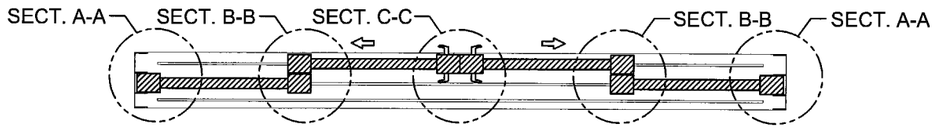

OXXO

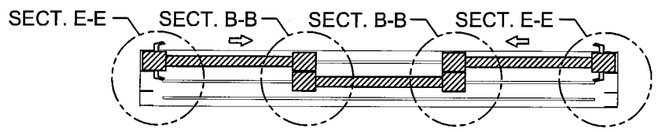

XOX

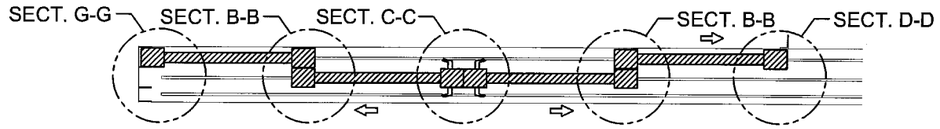

OXXX POCKET, OXXXp (SHOWN) OR pXXXO

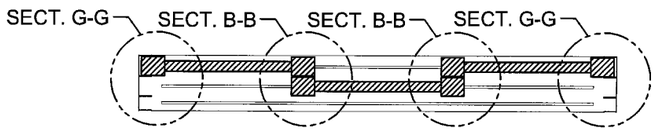

OOO ALL FIXED

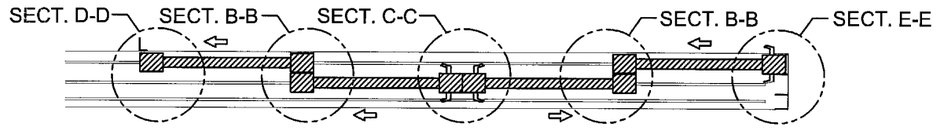

XXXX POCKET, pXXXX (SHOWN) OR XXXXp

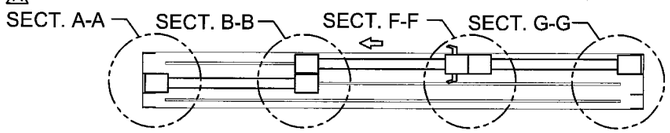

OXO W/ LEFT SLIDING PANEL (SHOWN) OR W/ RIGHT SLIDING PANEL

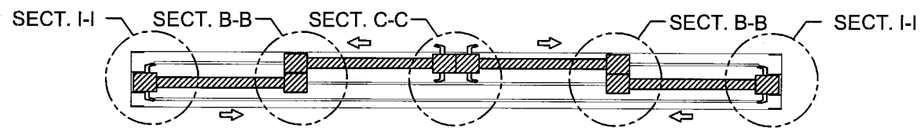

XXXX

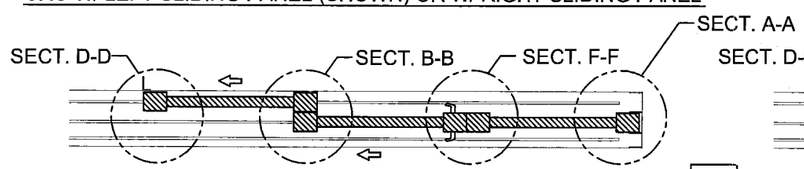

XXO POCKET, pXXO (SHOWN) OR OXXp

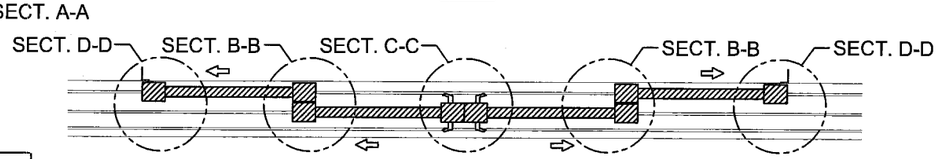

XXXX DOUBLE POCKET, pXXXXp

NOTES:
1. SEE SECTIONS A-A, B-B, C-C , D-D AND E-E ON SHEET 7.
2. SEE SECTIONS F-F, G-G, H-H AND I-I ON SHEET 8.

EXTERIOR, ALL

Approved as complying with the Florida Building Code
Date 11/11/04
NOA# 04-0629.02
Miami-Dade Product Control Division
By

10/8/04

Revsd By:	Date:	Revisions:	
F.K.	10/1/04	A	CORRECT SECT. OF OXO CONFIG.
Revsd By:	Date:	Revisions:	
Revsd By:	Date:	Revisions:	
Drawn By: F.K.	Date: 6/24/04	Checked By:	Date:

1070 TECHNOLOGY DRIVE
NOKOMIS, FL 34275

P.O. BOX 1529
NOKOMIS, FL 34274

PGT Visibly Better

Description: CONFIGURATION DIAGRAMS

Title: ALUM. SLIDING GLASS DOOR, NON-IMPACT

Series/Model:	Scale:	Sheet:	Drawing No.	Rev:
SGD-70	NTS	5 of 13	4406-2	A

Lucas A. Turner, P.E.
PE #58201
Mechanical

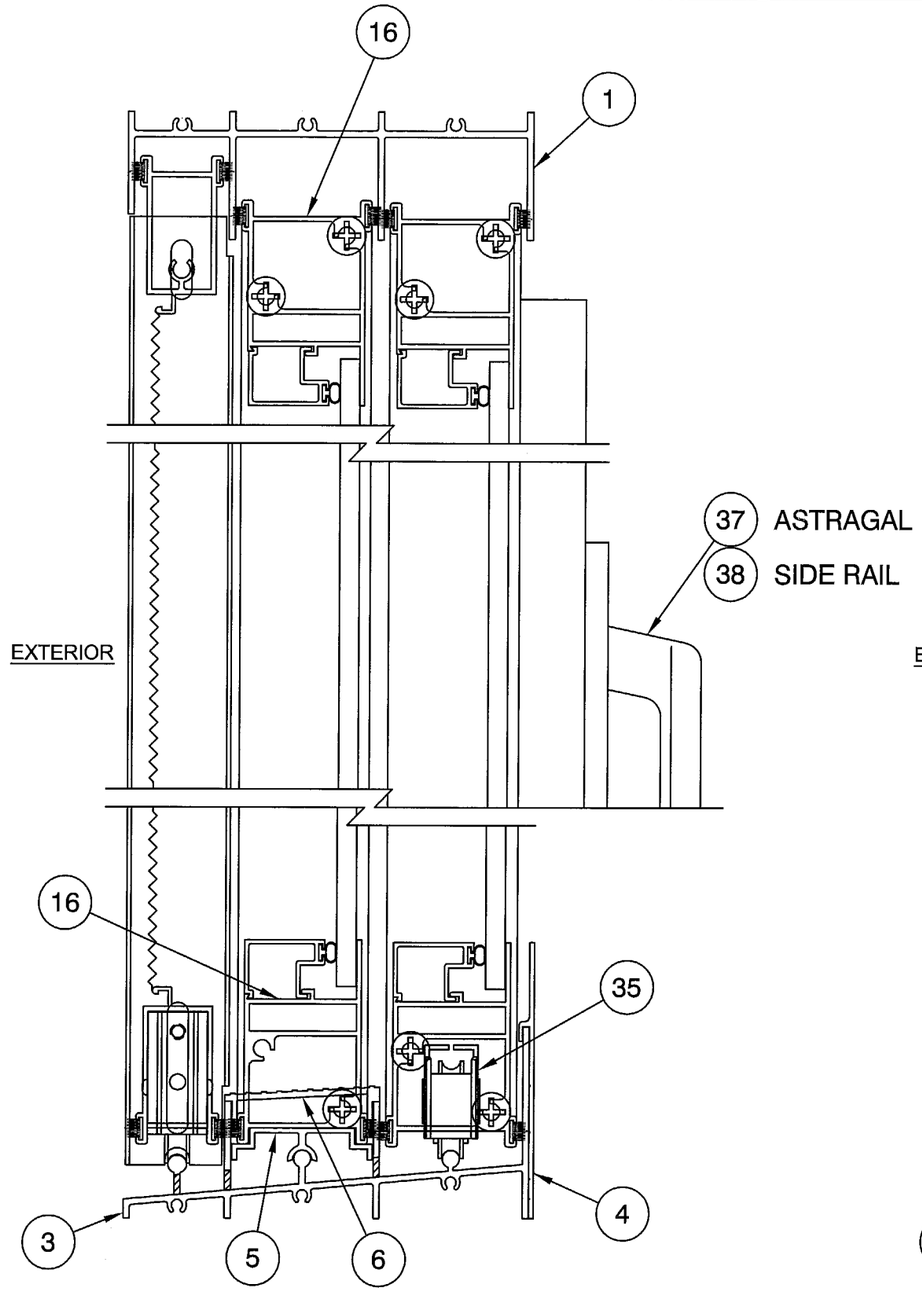

TYP. VERTICAL SECTION SHOWING ONE ACTIVE PANEL AND ONE FIXED PANEL

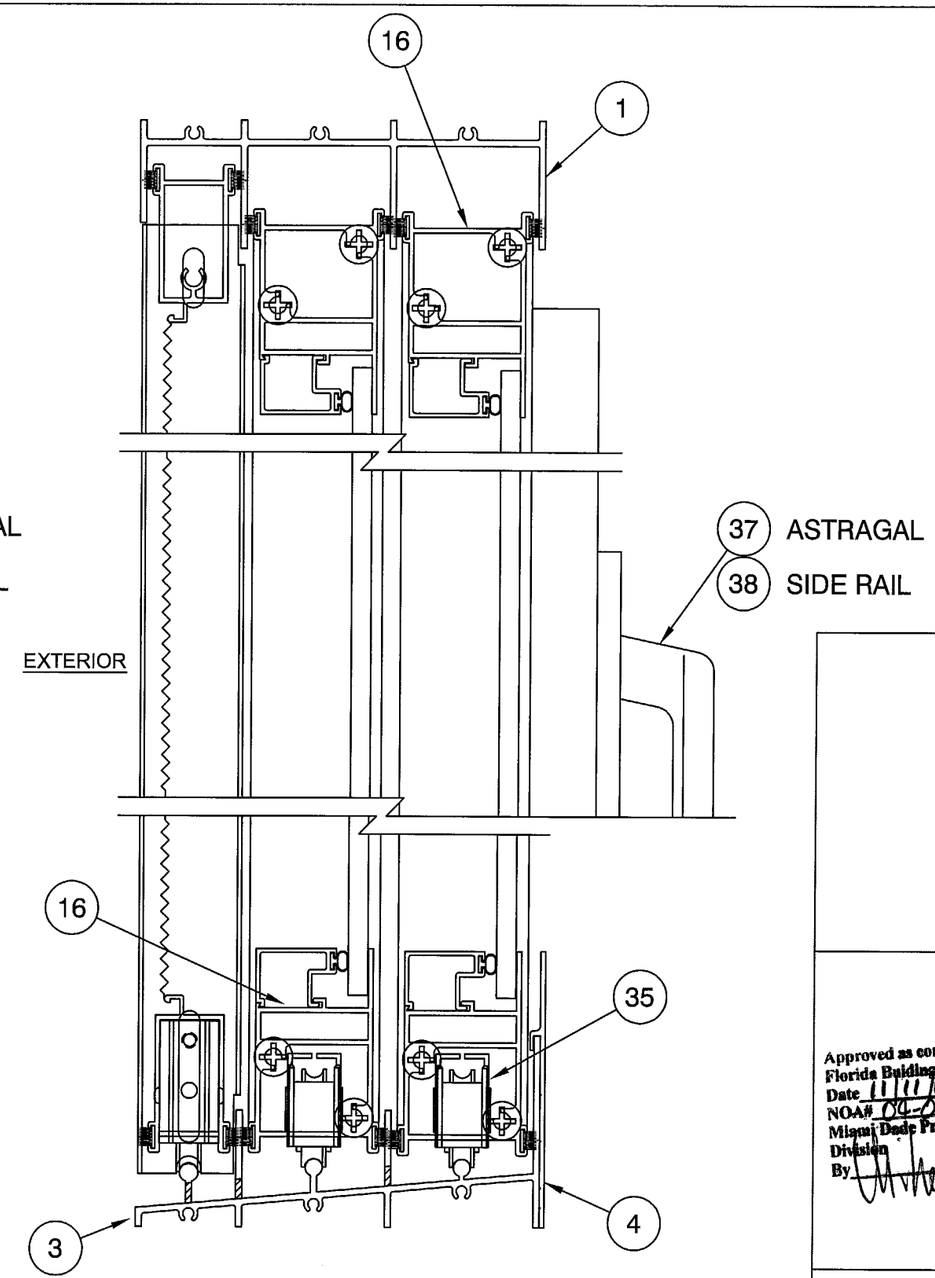

TYP. VERTICAL SECTION SHOWING TWO ACTIVE PANELS

Approved as complying with the Florida Building Code
Date 11/11/04
NOA# 04-0629.02
Miami Dade Product Control Division
By [signature]

L 02
10/8/04

Revsd By:	Date:	Revisions:	
F.K.	10/1/04	A	NO CHANGE THIS SHEET
Revsd By:	Date:	Revisions:	
Revsd By:	Date:	Revisions:	
Drawn By: F.K.	Date: 6/24/04	Checked By:	Date:

1070 TECHNOLOGY DRIVE
NOKOMIS, FL 34275

P.O. BOX 1529
NOKOMIS, FL 34274

PGT
Visibly Better

Description: VERTICAL SECTIONS

Title: ALUM. SLIDING GLASS DOOR, NON-IMPACT

Series/Model:	Scale:	Sheet:	Drawing No.	Rev:
SGD-70	1/2	6 of 13	4406-2	A

Lucas A. Turner, P.E.
PE #58201
Mechanical

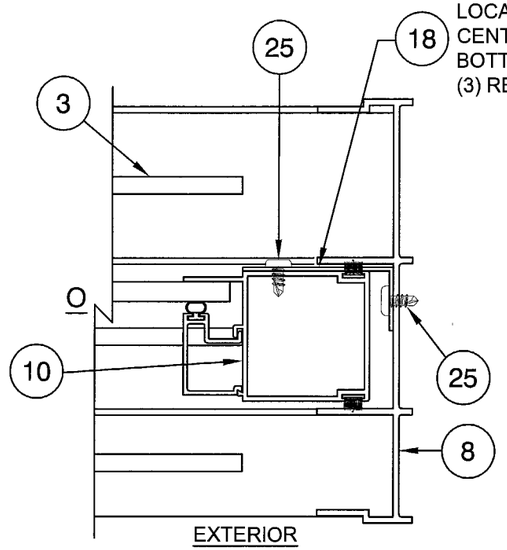

SECT. A-A

FIXED STILE AT JAMB (OUTSIDE)

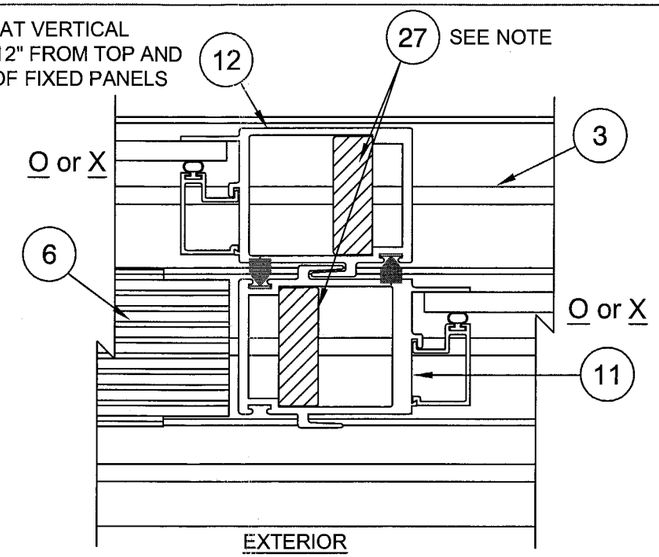

SECT. B-B

DOUBLE & SINGLE INTERLOCK

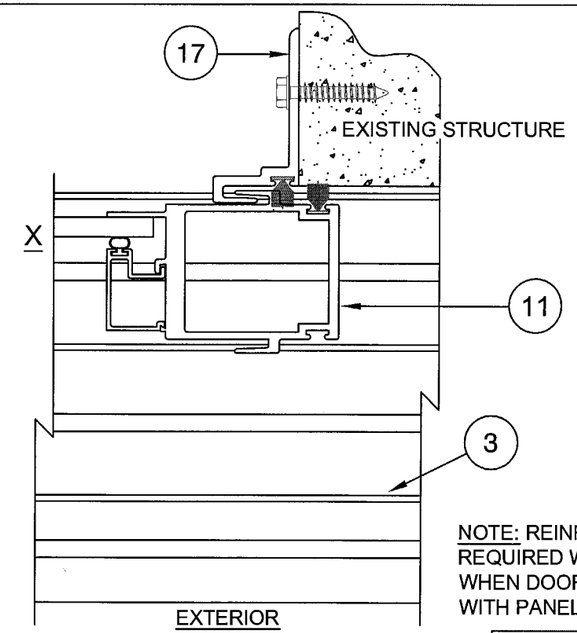

NOTE: REINFORCEMENT NOT REQUIRED WITH GLASS TYPE C. WHEN DOOR IS 96" HIGH OR LESS WITH PANELS 48" WIDE OR LESS.

SECT. D-D

MOVABLE INTERLOCK AT P-HOOK

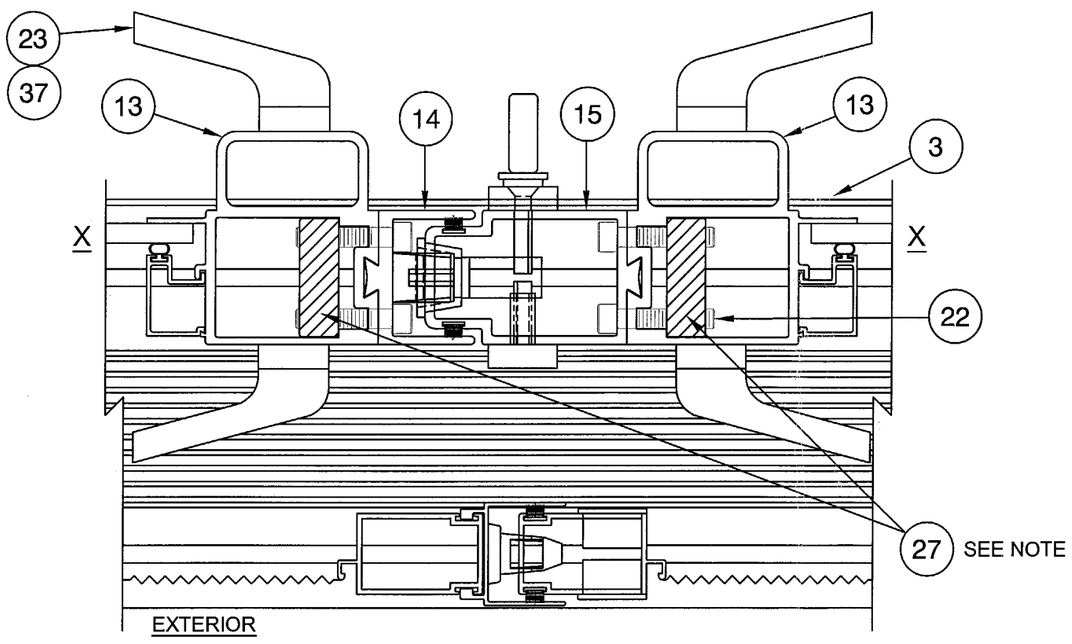

SECT. C-C

MOVABLE TO MOVABLE ASTRAGAL (INSIDE SHOWN)

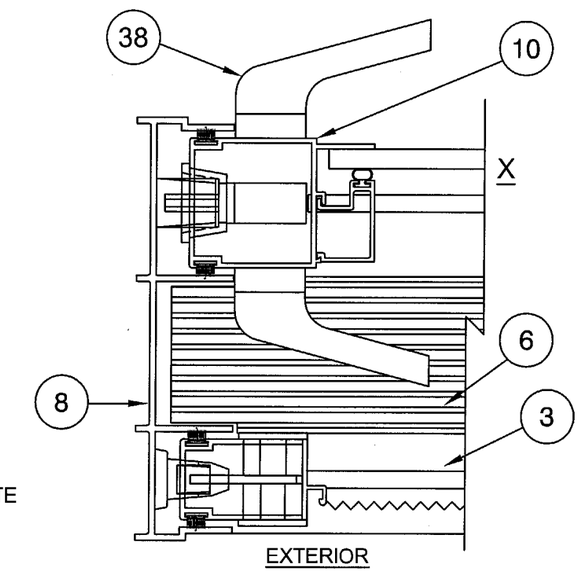

SECT. E-E

MOVABLE STILE AT JAMB (INSIDE)

Approved as complying with the Florida Building Code
Date 11/11/04
NOA# 04-0629.06
Miami-Dade Product Control Division
By

L a I
10/8/04

Lucas A. Turner, P.E.
PE #58201
Mechanical

Revsd By:	Date:	Revisions:	
F.K.	10/1/04	A	NO CHANGE THIS SHEET
Revsd By:	Date:	Revisions:	
Revsd By:	Date:	Revisions:	
Drawn By: F.K.	Date: 6/24/04	Checked By:	Date:

1070 TECHNOLOGY DRIVE
NOKOMIS, FL 34275

P.O. BOX 1529
NOKOMIS, FL 34274

PGT Visibly Better

Description: HORIZONTAL SECTIONS

Title: ALUM. SLIDING GLASS DOOR, NON-IMPACT

Series/Model:	Scale:	Sheet:	Drawing No.	Rev:
SGD-70	1/2	7 of 13	4406-2	A

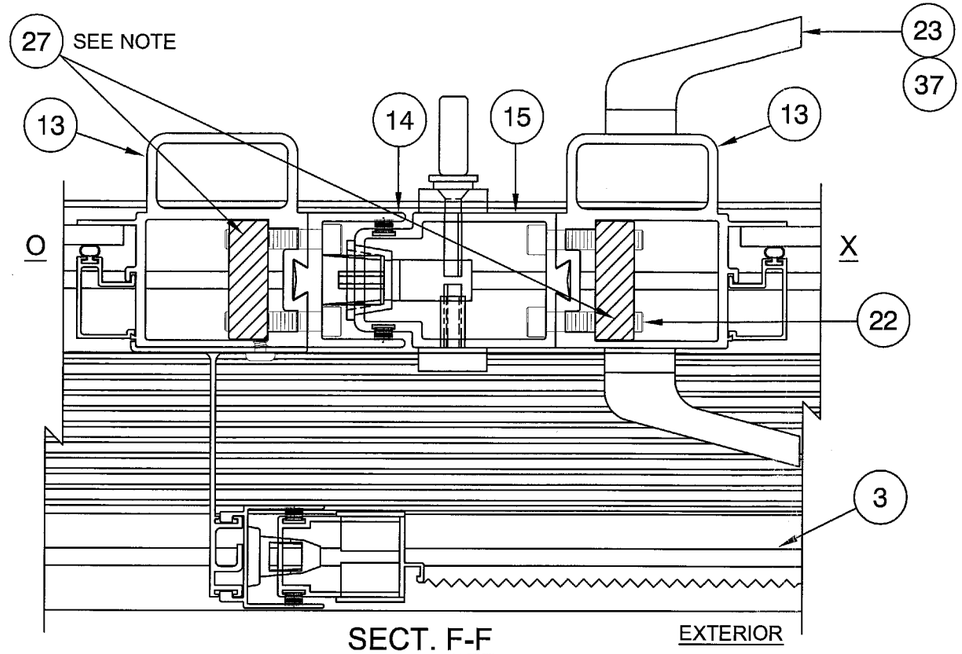

SECT. F-F

MOVABLE TO FIXED ASTRAGAL (INSIDE SHOWN)

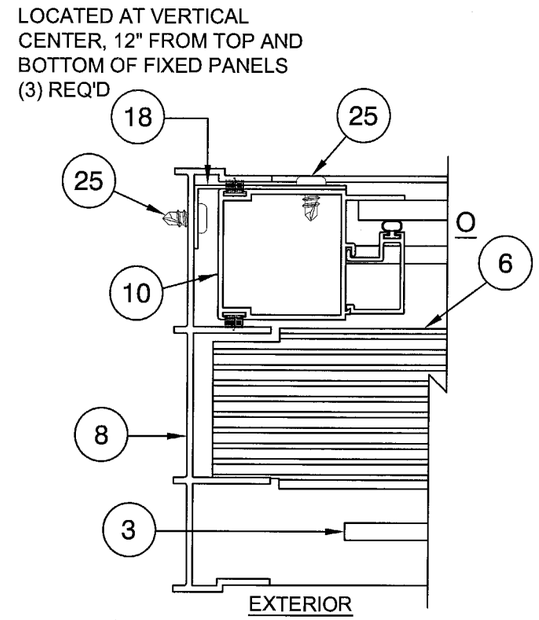

SECT. G-G

FIXED STILE AT JAMB (INSIDE)

NOTE: REINFORCEMENT NOT REQUIRED WITH GLASS TYPE C. WHEN DOOR IS 96" HIGH OR LESS WITH PANELS 48" WIDE OR LESS.

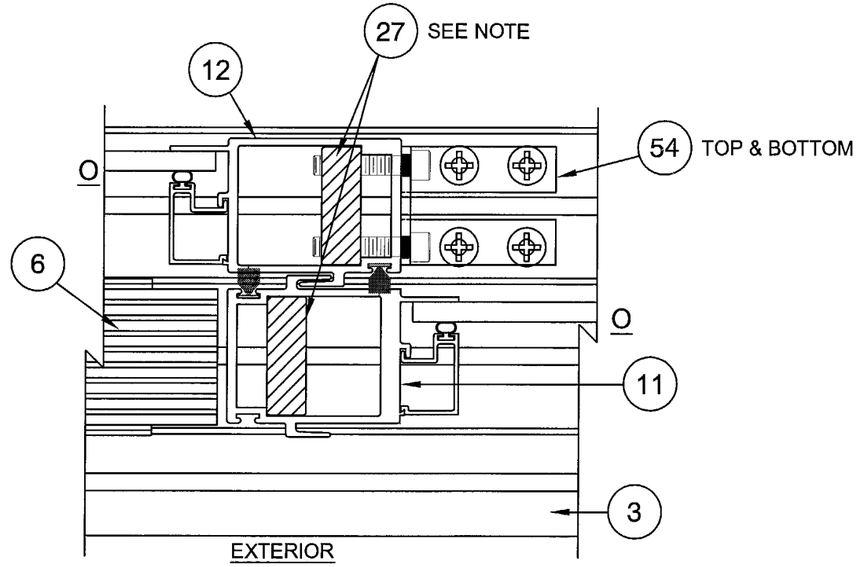

SECT. H-H

DOUBLE & SINGLE INTERLOCK (FIXED)

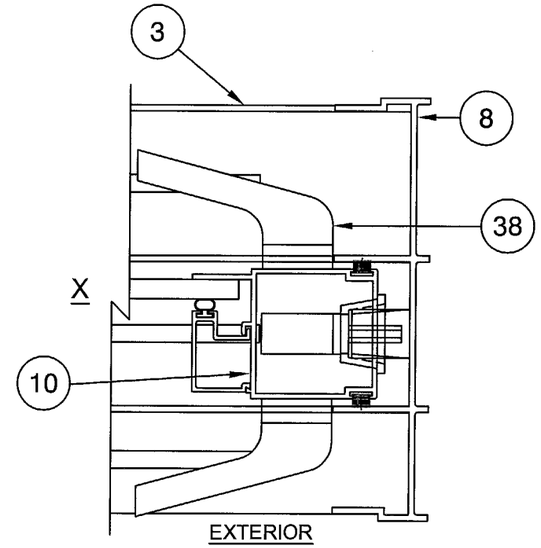

SECT. I-I

MOVABLE STILE AT JAMB (OUTSIDE)

Approved as complying with the Florida Building Code
Date 11/11/04
NOA# 04-0629.02
Miami Dade Product Control Division
By [signature]

[signature]
10/8/04

Revsd By:	Date:	Revisions:	
F.K.	10/1/04	A	NO CHANGE THIS SHEET
Revsd By:	Date:	Revisions:	
Revsd By:	Date:	Revisions:	
Drawn By: F.K.	Date: 6/24/04	Checked By:	Date:

1070 TECHNOLOGY DRIVE
NOKOMIS, FL 34275

P.O. BOX 1529
NOKOMIS, FL 34274

PGT Visibly Better

Description: HORIZONTAL SECTIONS CONTINUED

Title: ALUM. SLIDING GLASS DOOR, NON-IMPACT

Series/Model:	Scale:	Sheet:	Drawing No.	Rev:
SGD-70	1/2	8 of 13	4406-2	A

Lucas A. Turner, P.E.
PE #58201
Mechanical

ITEM	DWG#	PGT #	DESCRIPTION
1	4302	612245	FRAME HEAD
2	4386	7P4386	SILL/HEAD WEATHER STRIPPING PAD
3	4303	64303	FRAME SILL
4	4361	64361	3.500 SILL ADD ON
5	4314	612254	ADAPTER, FIXED PANEL
6	4315	64315	THRESHOLD COVER
7	4385	71164	HEAVY DUTY 4 HOLE BUMP STOP
8	4304	612247	FRAME JAMB
9	1155-1	781PQA	#8 X 1" LG. S. STL. QUAD/PHIL PAN HEAD
10	4306	612249	PANEL SIDE RAIL
11	4383	64383	DOUBLE INTERLOCK
12	4399	64399	INTERLOCK
13	4398	64398	ASTRAGAL BASE
14	4380	64380	FEMALE ADD-ON
15	4381	64381	MALE ADD-ON
16	4305	64305	TOP & BOTTOM RAIL
17	4403	64403	P-HOOK FOR POCKET DOORS
18	4362	64362	FIXED PANEL CLIP
19	1235	67S16G	WSTP .170 X .270 BACK, FIN SEAL
20	4393	67393G	WSTP .400 X .270 BACK, FIN SEAL
21		720X112X	1/4-20 X 1.50 PH. PAN HEAD S. STL. TYPE F
22		71420X114SHCSF	1/4-20 X 1.25 LG. SHCS S. STL.
23		71032X1FPFX	#10-32 X 1" LG. PHILLIPS FLAT HEAD 18-8 S. STL. RECESS ADAPTER MOUNTING SCREW & HANDLES
24		70834X	#8 X 3/4" LG. PHILLIPS PAN HEAD 18-8 S. STL. KEEPER MOUNTING SCREW
25		78X38PPT	#8 X 3/8 LONG PHILLIPS PAN HEAD TEK
26		71032INSERT	10-32 ALUMIN THREADED INSERT
27	4357	64357M	ALUM. REINFORCEMENT .500 X 1.500
28	4388		MOVING/FIXED INTERLOCK END PLUG
29	4387	44387	ASTRAGAL BASE END PLUG
30	4389	44389N	LOCKSTILE END PLUG
31	4392	7XXX1MD(BSW)	TOP RIGHT STICKER COVER
32	4392	7XXX4MD(BSW)	BOTTOM RIGHT STICKER COVER
33	4392	7XXX3MD(BSW)	TOP LEFT STICKER COVER
34	4392	7XXX2MD(BSW)	BOTTOM LEFT STICKER COVER
35	1049	71049	TANDEM ROLLER
36	1636	72048 W,K,S	3/4" HOLE PLUG
37		7SGD4050	(1) TRUTH INTERIOR PULL HANDLE AND BASE (1) TRUTH EXTERIOR PULL HANDLE AND BASE (2) #8-32 X 1 3/4" COLOR MATCHED HANDLE BASE SCREWS
38		7SGD2889	(1) TRUTH INTERIOR PULL HANDLE AND BASE (1) TRUTH EXTERIOR PULL HANDLE AND BASE (2) #8-32 X 1 3/4" COLOR MATCHED HANDLE BASE SCREWS (1) MORTISE LOCK LATCH (1) STAINLESS MORTICE LOCK (1) ZINC DICHROMATE RECESS ADAPTER (1) KEEPER
39			3/16" TEMPERED GLASS
40			1/4" TEMPERED GLASS
42			13/16" IG GLASS - 3/16" TEMP - 7/16" AIR SPACE - 3/16" TEMP
44			DOW CORNING 899 SILICONE GLAZING SEALANT
45			DOW CORNING 995 SILICONE STRUCTURAL SEALANT
46	1224	6TP247	VINYL BULB WEATHERSTRIP (THICK)
48	4323	612260	3/16" & 1/4" MONOLITHIC GLAZING BEAD
50	4405	64405	13/16" I.G. GLAZING BEAD
52	1267	71267N	SETTING BLOCKS 1" X 1/2" X 1/8" THICK
53	749	7BRKTM25	REINFORCEMENT SPRING CLIP
54	4356	74356A	FIXED PANEL ANGLE BRACKET
S1	4317	612256	SCREEN TOP RAIL
S4	4318	612257	SCREEN BOTTOM RAIL
S7	4319	612258	SCREEN SIDE RAIL
S11	4320	612259	SCREEN MEETING RAIL
S14	4344	64344	SCREEN ASTRAGAL
S15	4384	64384	SCREEN ASTRAGAL ADAPTER

Approved as complying with the Florida Building Code
Date 11/17/04
NOA# 04-0629.02
Miami-Dade Product Control Division
By

L a I
10/8/04

Lucas A. Turner, P.E.
PE #58201
Mechanical

Revsd By:	Date:	Revisions:	
F.K.	10/1/04	A	NO CHANGE THIS SHEET
Revsd By:	Date:	Revisions:	
Revsd By:	Date:	Revisions:	
Drawn By: F.K.	Date: 6/24/04	Checked By:	Date:

1070 TECHNOLOGY DRIVE
NOKOMIS, FL 34275

P.O. BOX 1529
NOKOMIS, FL 34274

PGT Visibly Better

Description: PARTS LIST

Title: ALUM. SLIDING GLASS DOOR, NON-IMPACT

Series/Model:	Scale:	Sheet:	Drawing No.	Rev:
SGD-70	NTS	9 of 13	4406-2	A

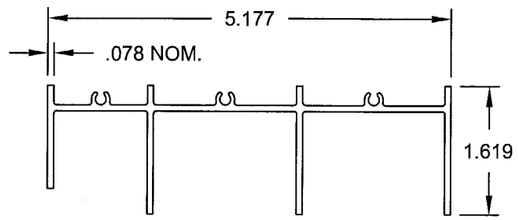

1 - FRAME HEAD
MAT'L: 6063-T5
DWG# 4302

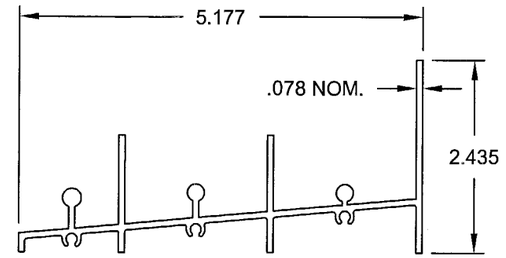

3 - FRAME SILL
MAT'L: 6063-T5
DWG# 4303

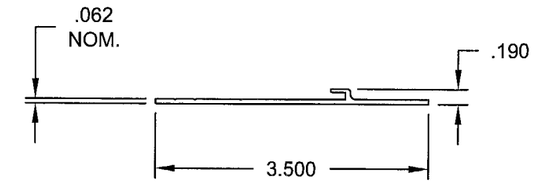

4 - ADD ON SILL
MAT'L: 6063-T5
DWG# 4361

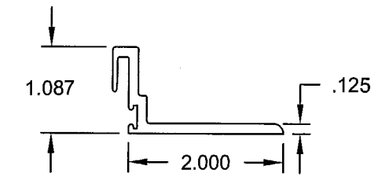

17 - P-HOOK
MAT'L: 6063-T6
DWG# 4403

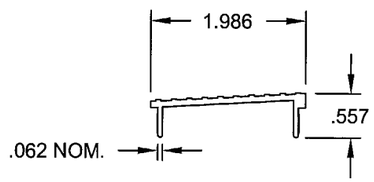

6 - THRESHOLD COVER
MAT'L: 6063-T5
DWG# 4315

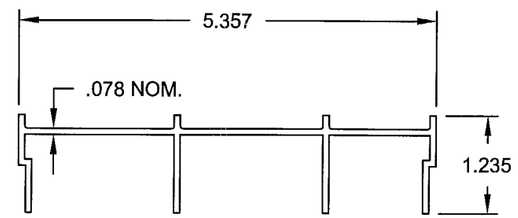

8 - FRAME JAMB
MAT'L: 6063-T5
DWG# 4304

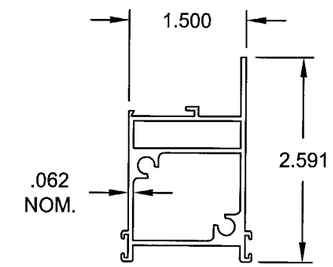

16 - TOP & BOTT. RAIL
MAT'L: 6063-T5
DWG# 4305

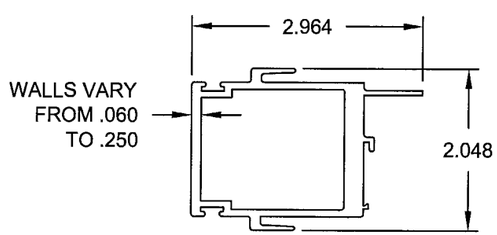

11 - DOUBLE INTERLOCK
MAT'L: 6063HS-T54
DWG# 4383

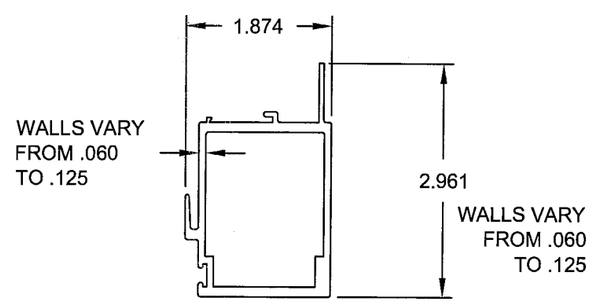

12 - INTERLOCK
MAT'L: 6063HS-T54
DWG# 4399

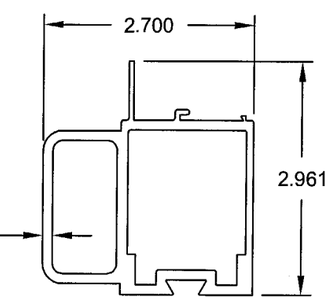

13 - ASTRA. BASE
MAT'L: 6063-T6
DWG# 4398

Approved as complying with the Florida Building Code
Date 11/11/04
NOA# 04-0629.02
Miami Dade Product Control Division
By

L a T
10/8/04

Revsd By:	Date:	Revisions:	
F.K.	10/1/04	A	NO CHANGE THIS SHEET
Revsd By:	Date:	Revisions:	
Revsd By:	Date:	Revisions:	
Drawn By: F.K.	Date: 6/24/04	Checked By:	Date:

1070 TECHNOLOGY DRIVE
NOKOMIS, FL 34275

P.O. BOX 1529
NOKOMIS, FL 34274

PGT Visibly Better

Description: EXTRUSIONS

Title: ALUM. SLIDING GLASS DOOR, NON-IMPACT

Series/Model:	Scale:	Sheet:	Drawing No.	Rev:
SGD-70	NTS	10 of 13	4406-2	A

Lucas A. Turner, P.E.
PE #58201
Mechanical

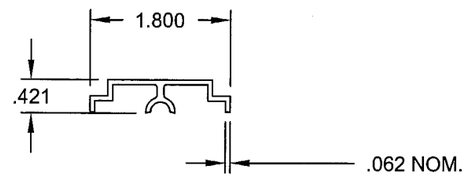

5 - ADAPTER, FIXED PANEL
MAT'L: 6063-T5
DWG# 4314

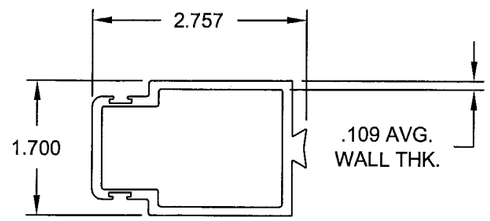

15 - MALE ADD-ON
MAT'L: 6063-T5
DWG# 4381

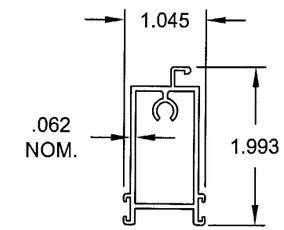

S1 - SCREEN TOP RAIL (SCREEN FRAME)
MAT'L: 6063-T5
DWG# 4317

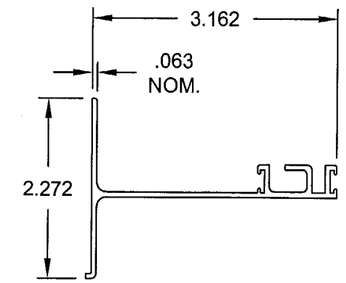

S15 - SCREEN ASTRAGAL ADAPTER
MAT'L: 6063-T5
DWG# 4384

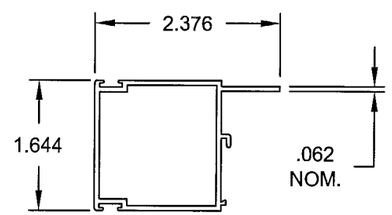

10 - PANEL SIDE RAIL
MAT'L: 6063-T5
DWG# 4306

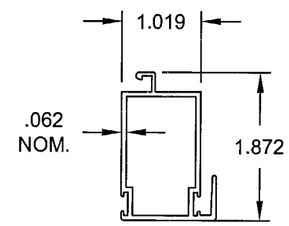

S11 - SCREEN MEETING RAIL (SCREEN FRAME)
MAT'L: 6063-T5
DWG# 4320

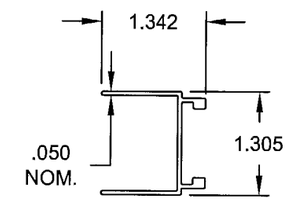

S14 - SCREEN ASTRAGAL
MAT'L: 6063-T5
DWG# 4344

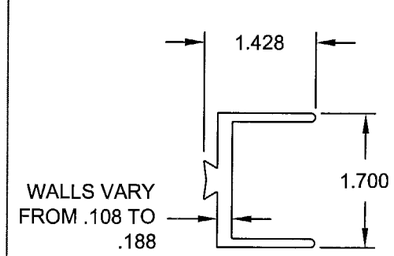

14 - FEMALE ADD-ON
MAT'L: 6063-T5
DWG# 4380

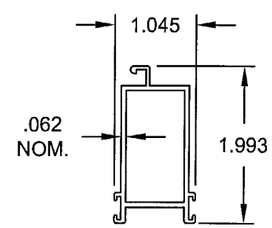

S4 - SCREEN BOTTOM RAIL (SCREEN FRAME)
MAT'L: 6063-T5
DWG# 4318

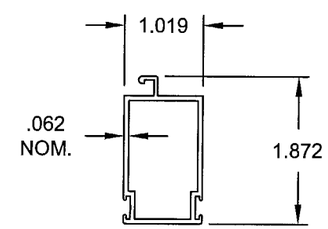

S7 - SCREEN SIDE RAIL (SCREEN FRAME)
MAT'L: 6063-T5
DWG# 4319

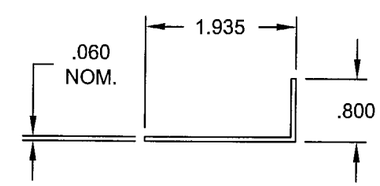

18 - FIXED PANEL CLIP
MAT'L: 6063-T5
DWG# 4362

Approved as complying with the Florida Building Code
Date 11/11/04
NOA# 04-0629.02
Miami-Dade Product Control Division
By

10/8/04

Revsd By: F.K.	Date: 10/1/04	Revisions: A	NO CHANGE THIS SHEET		
Revsd By:	Date:	Revisions:			
Revsd By:	Date:	Revisions:			
Drawn By: F.K.	Date: 6/24/04	Checked By:	Date:		

1070 TECHNOLOGY DRIVE
NOKOMIS, FL 34275

P.O. BOX 1529
NOKOMIS, FL 34274

PGT Visibly Better

Description: EXTRUSIONS

Title: ALUM. SLIDING GLASS DOOR, NON-IMPACT

Series/Model:	Scale:	Sheet:	Drawing No.	Rev:
SGD-70	NTS	11 of 13	4406-2	A

Lucas A. Turner, P.E.
PE #58201
Mechanical

HEAD AND SILL INTERLOCK & ASTRAGAL ANCHOR CLUSTER BY PANEL SIZE & GLASS TYPE

A. 3/16" TEMPERED
B. 1/4" TEMPERED
C. 13/16" TEMPERED I.G.

NOM. PANEL WIDTH	GLASS TYPE	DOOR HEIGHT 72" (6⁰) TAPCONS HEAD	72" (6⁰) TAPCONS SILL	72" (6⁰) SCREWS HEAD	72" (6⁰) SCREWS SILL	80" (6⁸) TAPCONS HEAD	80" (6⁸) TAPCONS SILL	80" (6⁸) SCREWS HEAD	80" (6⁸) SCREWS SILL	84" (7⁰) TAPCONS HEAD	84" (7⁰) TAPCONS SILL	84" (7⁰) SCREWS HEAD	84" (7⁰) SCREWS SILL	90" (7⁶) TAPCONS HEAD	90" (7⁶) TAPCONS SILL	90" (7⁶) SCREWS HEAD	90" (7⁶) SCREWS SILL	96" (8⁰) TAPCONS HEAD	96" (8⁰) TAPCONS SILL	96" (8⁰) SCREWS HEAD	96" (8⁰) SCREWS SILL	102" (8⁶) TAPCONS HEAD	102" (8⁶) TAPCONS SILL	102" (8⁶) SCREWS HEAD	102" (8⁶) SCREWS SILL	108" (9⁰) TAPCONS HEAD	108" (9⁰) TAPCONS SILL	108" (9⁰) SCREWS HEAD	108" (9⁰) SCREWS SILL	114" (9⁶) TAPCONS HEAD	114" (9⁶) TAPCONS SILL	114" (9⁶) SCREWS HEAD	114" (9⁶) SCREWS SILL	120" (10⁰) TAPCONS HEAD	120" (10⁰) TAPCONS SILL	120" (10⁰) SCREWS HEAD	120" (10⁰) SCREWS SILL
24" (2⁰)	A	A	B	B	C	A	B	B	C	A	B	B	C	B	B	C	C	B	B	C	D																
	B	A	B	B	C	A	B	B	C	A	B	B	C	B	B	C	C	B	B	C	D	B	B	B	C	B	B	B	C	B	B	B	C	B	B	B	C
	C	A	B	B	C	A	B	B	C	A	B	B	C	B	B	C	C	B	B	C	D	B	B	B	C	B	B	B	C	B	B	B	C	B	B	B	C
30" (2⁶)	A	A	B	B	C	A	B	B	C	A	B	B	C	B	B	B	C	B	B	B	C																
	B	A	B	B	C	A	B	B	C	B	B	B	C	B	B	B	C	B	B	B	C	A	B	B	C	A	B	B	C	A	B	B	C	A	B	B	C
	C	A	B	B	C	A	B	B	C	B	B	B	C	B	B	B	C	B	B	B	C	A	B	B	C	A	B	B	C	A	B	B	C	A	B	B	C
36" (3⁰)	A	A	B	B	C	A	B	B	C	A	B	B	C	A	B	B	C	A	B	B	C																
	B	B	B	C	D	B	C	C	D	B	C	C	D	B	B	C	D	B	B	C	D	B	B	B	C	B	B	B	C	A	B	B	C	A	B	B	C
	C	B	B	C	D	B	C	C	D	B	C	C	D	B	B	C	D	B	B	C	D	B	B	B	C	B	B	B	C	A	B	B	C	A	B	B	C
42" (3⁶)	A	A	B	B	C	B	B	B	C	B	B	B	C	B	B	B	C	A	B	B	C																
	B	A	B	B	C	B	B	C	D	B	C	C	D	B	C	C	D	B	B	C	D	A	B	B	C	B	B	B	C	B	B	B	C	A	B	B	C
	C	B	B	C	C	B	B	C	D	B	C	C	D	B	C	C	D	B	B	C	D	A	B	B	C	B	B	B	C	B	B	B	C	A	B	B	C
48" (4⁰)	A	A	B	B	C	A	B	B	C	A	B	B	C	B	B	C	C	B	B	B	C																
	B	A	B	B	C	A	B	B	C	A	B	B	C	B	B	C	C	B	C	C	D	A	B	B	C	A	B	B	C	A	B	B	C	A	B	B	C
	C	B	B	B	C	B	B	C	C	B	B	C	C	B	B	C	C	B	C	C	D	A	B	B	C	A	B	B	C	A	B	B	C	A	B	B	C
54" (4⁶)	B	A	B	B	C	B	B	B	C	B	B	C	C	B	B	C	D	B	B	C	C																
	C	A	B	B	C	B	B	B	C	B	B	C	C	B	B	C	D	B	B	C	C																
60" (5⁰)	B	A	A	B	B	A	B	B	C	A	B	B	C	A	B	B	C	B	B	C	C																
	C	A	A	B	B	A	B	B	C	A	B	B	C	A	B	B	C	B	B	C	C																

ANCHORS ABOVE ARE MIAMI-DADE COUNTY APPROVED 1/4" TAPCONS OR #12 SCREWS **TABLE 2.** △A

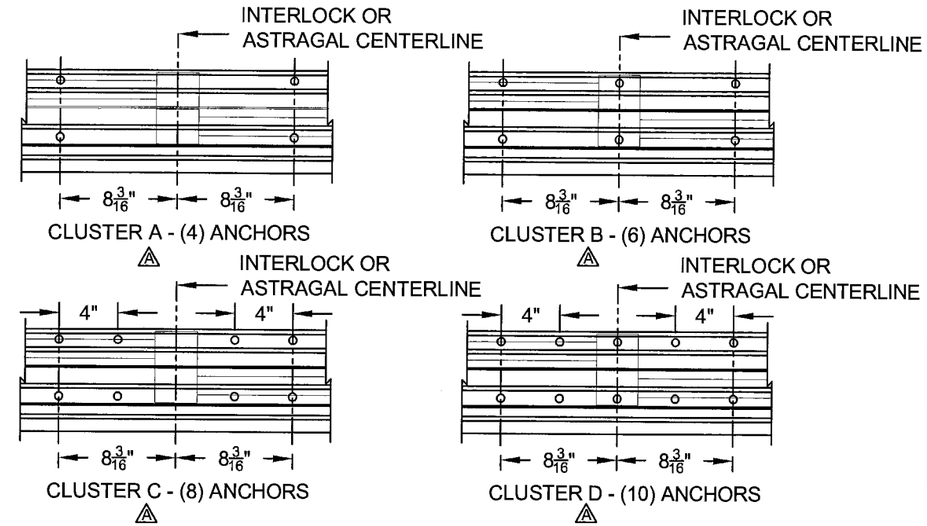

HEAD OR SILL ANCHOR CLUSTERS

MIAMI-DADE COUNTY ANCHORAGE SPACING REQUIREMENTS:

1. TWO MIAMI-DADE COUNTY APPROVED 1/4" TAPCONS OR #12 SCREWS AT EACH HEAD SILL AND JAMB LOCATION DETAILED IN NOTES 2 THROUGH 4. P-HOOKS REQUIRE △A A SINGLE ROW OF 1/4" TAPCONS OR #12 SCREWS AT EACH LOCATION DETAILED IN NOTES 2 THROUGH 4.
2. MAX. 96" HIGH DOORS W/ PANELS UP TO 48" WIDE.
   △A HEAD..... 8 1/4" MAX. FROM CORNERS AND 16 3/8" MAX. O.C. PLUS APPLICABLE CLUSTER(S) FROM TABLE 2 AT EACH HEAD INTERLOCK OR ASTRAGAL CENTERLINE..
   SILL..... 8 1/4" MAX. FROM CORNERS AND 16 3/8" MAX. O.C. PLUS APPLICABLE CLUSTER(S) FROM TABLE 2 AT EACH SILL INTERLOCK OR ASTRAGAL CENTERLINE.
   JAMBS..... 8" MAX FROM BOTTOM AND 26 11/16" MAX. O.C.
   P-HOOKS.. 8" MAX. FROM BOTTOM AND 20" MAX. O.C. (1/4" TAPCONS), 14 11/16" MAX. O.C. (#12 SCREWS).
3. MAX. 120" HIGH DOORS W/ PANELS UP TO 48" WIDE.
   △A HEAD..... 8 1/4" MAX. FROM CORNERS AND 16 3/8" MAX. O.C. PLUS APPLICABLE CLUSTER(S) FROM TABLE 2. AT EACH HEAD INTERLOCK OR ASTRAGAL CENTERLINE.
   SILL..... 8 1/4" MAX. FROM CORNERS AND 16 3/8" MAX. O.C. PLUS APPLICABLE CLUSTER(S) FROM TABLE 2. AT EACH SILL INTERLOCK OR ASTRAGAL CENTERLINE.
   JAMBS..... 8" MAX FROM BOTTOM AND 26" MAX. O.C.
   P-HOOKS.. 8" MAX. FROM BOTTOM AND 26" MAX. O.C. (1/4" TAPCONS), 20 13/16" MAX. O.C. (#12 SCREWS).
4. MAX. 96" HIGH DOORS W/ PANELS UP TO 60" WIDE.
   △A HEAD..... 8 1/4" MAX. FROM CORNERS AND 22 7/8" MAX. O.C. PLUS APPLICABLE CLUSTER(S) FROM TABLE 2. AT EACH HEAD INTERLOCK OR ASTRAGAL CENTERLINE.
   SILL..... 8 1/4"" MAX. FROM CORNERS AND 22 7/8" MAX. O.C. PLUS APPLICABLE CLUSTER(S) FROM TABLE 2. AT EACH SILL INTERLOCK OR ASTRAGAL CENTERLINE.
   JAMBS..... 8" MAX FROM BOTTOM AND 26 11/16" MAX. O.C.
   P-HOOKS.. 8" MAX. FROM BOTTOM AND 26 11/16" MAX. O.C. (1/4" TAPCONS), 16" MAX. O.C. (#12 SCREWS).

Approved as complying with the Florida Building Code
Date 11/11/04
NOA# 04-0629.02
Miami-Dade Product Control Division
By

L. A. T.
10/8/04

Revsd By:	Date:	Revisions:	
F.K.	10/1/04	A	RECALC ANCHOR CAPACITIES, UPDATE SPACING NOTES & TABLE
Revsd By:	Date:	Revisions:	
Revsd By:	Date:	Revisions:	
Drawn By: F.K.	Date: 6/24/04	Checked By:	Date:

1070 TECHNOLOGY DRIVE
NOKOMIS, FL 34275

P.O. BOX 1529
NOKOMIS, FL 34274

PGT Visibly Better

Description: ANCHORAGE SPACING

Title: ALUM. SLIDING GLASS DOOR, NON-IMPACT

Series/Model:	Scale:	Sheet:	Drawing No.	Rev:
SGD-70	1/8	12 of 13	4406-2	A

Lucas A. Turner, P.E.
PE #58201
Mechanical

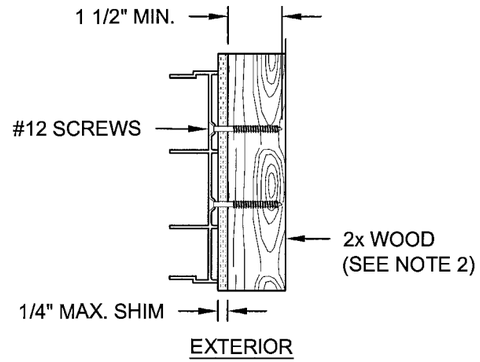

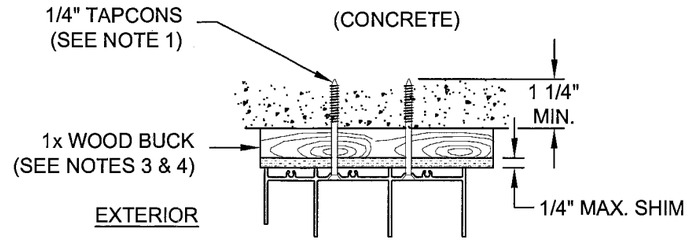

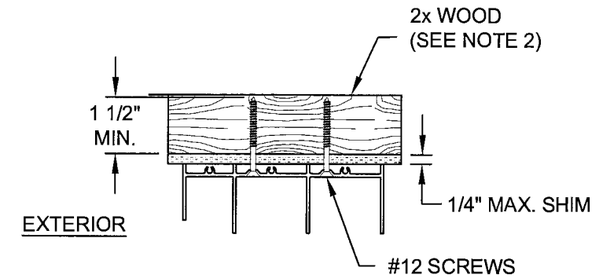

TYPICAL FRAME HEAD INSTALLATIONS

NOTES:

1. FOR CONCRETE APPLICATIONS IN MIAMI-DADE COUNTY, USE ONLY MIAMI-DADE COUNTY APPROVED TAPCONS. Δ
2. INSTALLATION TO THE SUBSTRATE OF WOOD BUCKS 1 1/2" OR MORE THICK TO BE ENGINEERED BY OTHERS AND TO BE REVIEWED BY AUTHORITY HAVING JURISDICTION.
3. INSTALLATION TO THE SUBSTRATE OF WOOD BUCKS LESS THAN 1 1/2" THICK TO BE ENGINEERED BY OTHERS OR AS APPROVED BY AUTHORITY HAVING JURISDICTION.
4. WOOD BUCKS LESS THAN 1 1/2" THICK ARE OPTIONAL (PRODUCT MAY BE INSTALLED DIRECTLY TO CONCRETE).

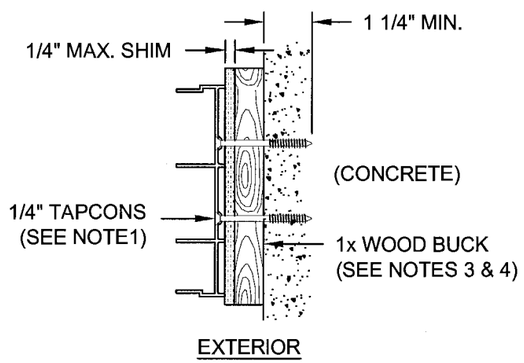

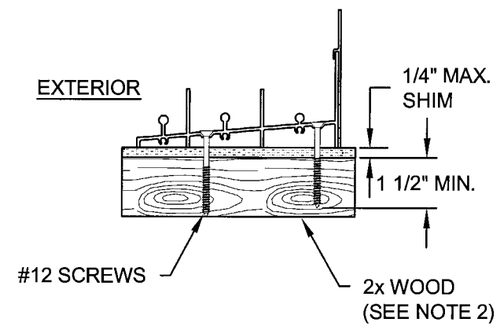

TYPICAL FRAME JAMB INSTALLATIONS

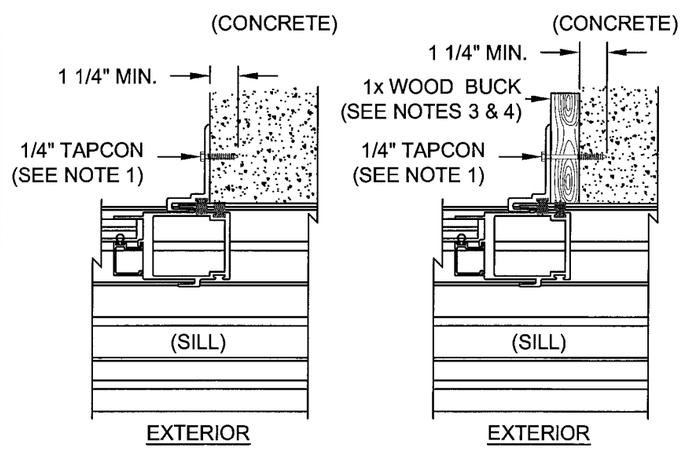

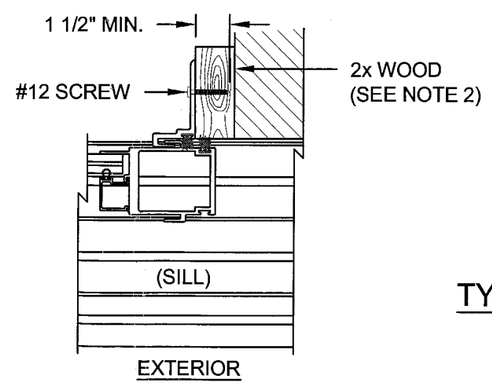

TYPICAL POCKET P-HOOK INSTALLATIONS

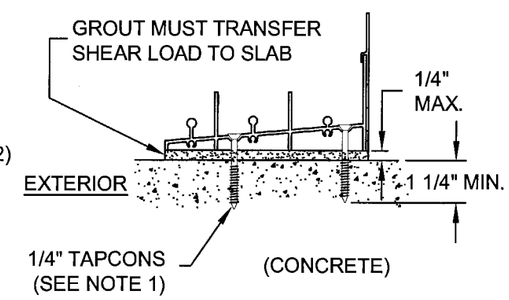

TYPICAL FRAME SILL INSTALLATIONS

Approved as complying with the Florida Building Code
Date 11/11/04
NOA# 04-0629.02
Miami-Dade Product Control Division
By

10/8/04

Revsd By:	Date:	Revisions:	
F.K.	10/1/04	A	REMOVED MANUFACTURERS DESIGNATION
Revsd By:	Date:	Revisions:	
Revsd By:	Date:	Revisions:	
Drawn By: F.K.	Date: 6/24/04	Checked By:	Date:

1070 TECHNOLOGY DRIVE
NOKOMIS, FL 34275

P.O. BOX 1529
NOKOMIS, FL 34274

PGT Visibly Better

Description: ANCHORAGE DETAILS

Title: ALUM. SLIDING GLASS DOOR, NON-IMPACT

Series/Model:	Scale:	Sheet:	Drawing No.	Rev:
SGD-70	1/4	13 of 13	4406-2	A

Lucas A. Turner, P.E.
PE #58201
Mechanical