MIAMI-DADE

BUILDING CODE COMPLIANCE OFFICE (BCCO)
PRODUCT CONTROL DIVISION

MIAMI-DADE COUNTY, FLORIDA
METRO-DADE FLAGLER BUILDING
140 WEST FLAGLER STREET, SUITE 1603
MIAMI, FLORIDA 33130-1563
(305) 375-2901 FAX (305) 375-2908

NOTICE OF ACCEPTANCE (NOA)

R.C. Aluminum Industries, Inc.
2805 NW 75th Ave
Miami, FL 33122

SCOPE:

This NOA is being issued under the applicable rules and regulations governing the use of construction materials. The documentation submitted has been reviewed by Miami-Dade County Product Control Division and accepted by the Board of Rules and Appeals (BORA) to be used in Miami Dade County and other areas where allowed by the Authority Having Jurisdiction (AHJ).

This NOA shall not be valid after the expiration date stated below. The Miami-Dade County Product Control Division (In Miami Dade County) and/or the AHJ (in areas other than Miami Dade County) reserve the right to have this product or material tested for quality assurance purposes. If this product or material fails to perform in the accepted manner, the manufacturer will incur the expense of such testing and the AHJ may immediately revoke, modify, or suspend the use of such product or material within their jurisdiction. BORA reserves the right to revoke this acceptance, if it is determined by Miami-Dade County Product Control Division that this product or material fails to meet the requirements of the applicable building code.

This product is approved as described herein, and has been designed to comply with the Florida Building Code, including the High Velocity Hurricane Zone.

DESCRIPTION: Series 2400ST Aluminum Sliding Glass Door -L.M.I.

APPROVAL DOCUMENT: Drawing No. **W01-75**, titled "Series- 2400ST Alum SLD. Glass Door (L.M.I.)", sheets 1 through 7 of 7, prepared by AL-Farooq Corporation, dated 11/02/01 with revision **"B"** on 01/23/04, signed and sealed by Humayoun Farooq, P.E., bearing the Miami-Dade County Product Control Revision stamp with the Notice of Acceptance number and expiration date by the Miami-Dade County Product Control Division.

MISSILE IMPACT RATING: Large and Small Missile Impact

LABELING: Each unit shall bear a permanent label with the manufacturer's name or logo, city, state and following statement: "Miami-Dade County Product Control Approved", unless otherwise noted herein.

RENEWAL of this NOA shall be considered after a renewal application has been filed and there has been no change in the applicable building code negatively affecting the performance of this product.

TERMINATION of this NOA will occur after the expiration date or if there has been a revision or change in the materials, use, and/or manufacture of the product or process. Misuse of this NOA as an endorsement of any product, for sales, advertising or any other purposes shall automatically terminate this NOA. Failure to comply with any section of this NOA shall be cause for termination and removal of NOA.

ADVERTISEMENT: The NOA number preceded by the words Miami-Dade County, Florida, and followed by the expiration date may be displayed in advertising literature. If any portion of the NOA is displayed, then it shall be done in its entirety.

INSPECTION: A copy of this entire NOA shall be provided to the user by the manufacturer or its distributors and shall be available for inspection at the job site at the request of the Building Official.

This NOA **revises NOA # 02-0222.04** and consists of this page 1 and evidence pages E-1 and E-2, as well as approval document mentioned above.

The submitted documentation was reviewed by **Herminio F. Gonzalez, P.E., Director, BCCO**

9/8/04

PRODUCT CONTROL ACCEPTED

NOTICE OF ACCEPTANCE: EVIDENCE SUBMITTED

A. DRAWINGS

1. Manufacturer's die drawings and sections.
2. Drawing No **WO1-75**, Sheets 1 through 7 of 7, titled "Series-2400ST Alum. Sld. Glass Door (L.M.I.)," prepared by AL Farooq Corporation, dated 11/21/01 and revision **"B"** on 01/23/04, signed and sealed by Humayoun Farooq, P.E.

B. TESTS

1. Test reports on 1) Air Infiltration Test, per FBC, TAS 202-94
   2) Uniform Static Air Pressure Test, Loading per FBC, TAS 202-94
   3) Water Resistance Test, per FBC, TAS 202-94
   4) Large Missile Impact Test per FBC, TAS 201-94
   5) Cyclic Wind Pressure Loading per FBC, TAS 203-94
   6) Forced Entry Test, per FBC 2411 3.2.1 (b) and TAS 202-94

   along with marked-up drawings and installation diagram of an aluminum sliding glass door, prepared by Fenestration Testing Laboratory, Inc., Test Report No. **FTL-01074**, dated 6/25/01, signed and sealed by Luis Figueredo, P.E.
   "Submitted under NOA # 02-0222.04"

C. CALCULATIONS

1. Anchor Calculations and structural analysis, prepared by Al Farooq Corporation, dated 8/30/01, signed and sealed by Humayoun Farooq, P.E.
   "Submitted under NOA # 02-0222.04"

D. QUALITY ASSURANCE

1. Miami Dade Building Code Compliance Office (BCCO).

E. MATERIAL CERTIFICATIONS

1. Notice of Acceptance No. **01-1204.01**, issued to E.I. DuPont DeNemours for their "Sentry Glass ® Plus", approved on 01/17/02 and expiring on 01/14/07.

F. STATEMENTS

1. Statement letter of conformance, dated 9/10/01, signed and sealed by Humayoun Farooq, P.E.
   "Submitted under NOA # 02-0222.04"
2. Statement letter of no financial interest, 9/10/01, signed and sealed by Humayoun Farooq, P.E.
   "Submitted under NOA # 02-0222.04"

Herminio F. Gonzalez, P.E.
Director, Building Code Compliance Office
NOA No 04-0803.03
Expiration Date: February 07, 2007
Approval Date: September 30, 2004

NOTICE OF ACCEPTANCE: EVIDENCE SUBMITTED

G. OTHER

1. Notice of Acceptance No. **02-0222.04**, issued to R.C. Aluminum Industries for their Series 2400ST Glass Door (L.M.I.), approved on 05/02/02 and expiring on 02/07/07
2. Letter from the consultant stating that the product is in compliance with the Florida Building Code (FBC)

Herminio F. Gonzalez, P.E.
Director, Building Code Compliance Office
NOA No 04-0803.03
Expiration Date: February 07, 2007
Approval Date: September 30, 2004

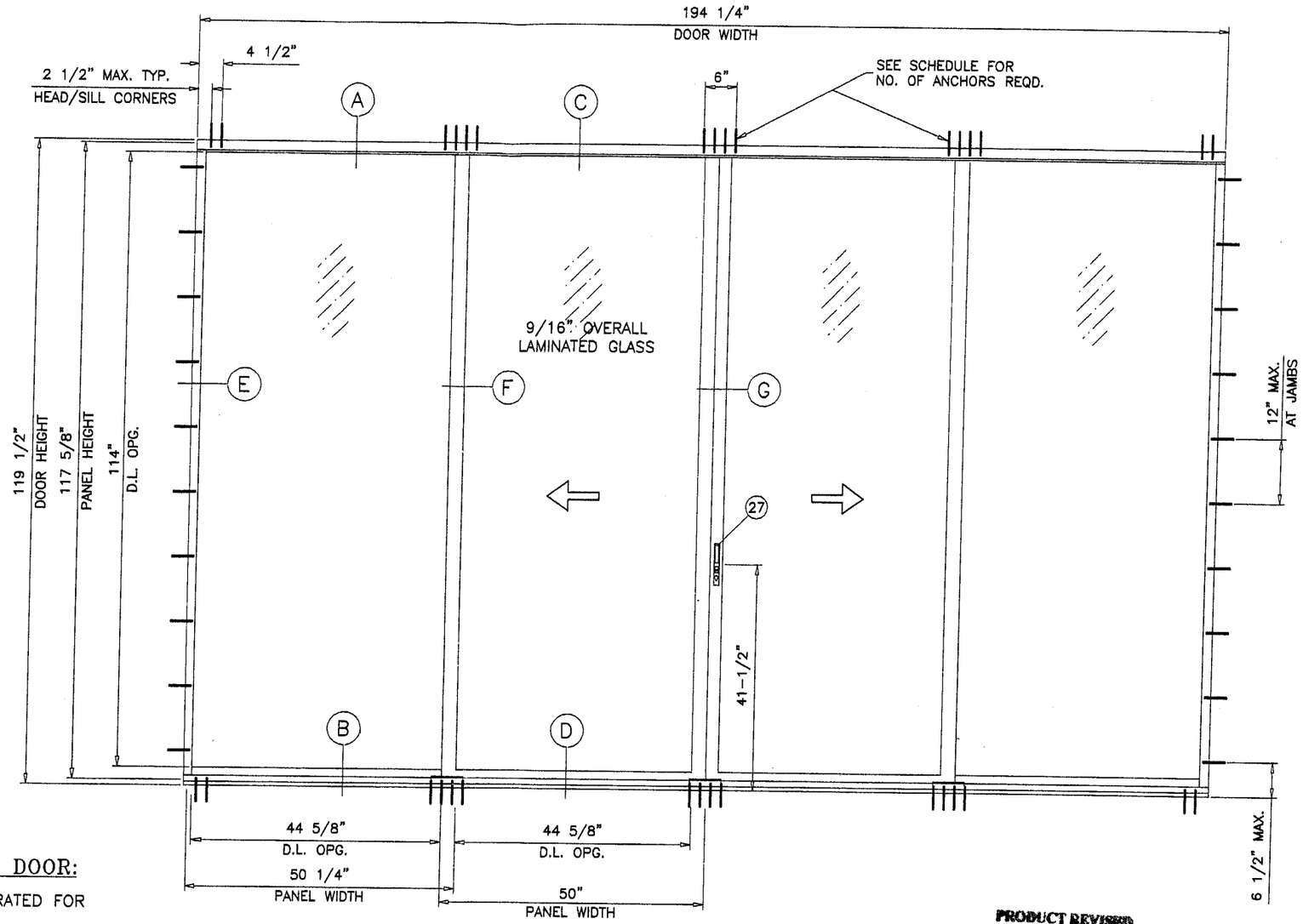

TYPICAL ELEVATION
TESTED UNIT

SERIES 2400ST ALUMINUM SLIDING GLASS DOOR:

DOORS GLAZED WITH 9/16" GLASS (.090" INTERLAYER) RATED FOR LARGE MISSILE IMPACT AND REQUIRE NO SHUTTERS.

SEE SHEET 2 FOR CAPACITY.

DOORS MAY HAVE ANY NUMBER OF PANELS USING STILE CONIGURATIONS AS SHOWN ON SHEET 4.
I.E. OX, XO, OXO, OXXO.

THIS PRODUCT IS DESIGNED TO COMPLY WITH THE HIGH VELOCITY HURRICANE ZONE OF THE 2001 FLORIDA BUILDING CODE.

WOOD BUCKS BY OTHERS, MUST BE ANCHORED PROPERLY TO TRANSFER LOADS TO THE STRUCTURE.

ANCHORS SHALL BE AS LISTED, SPACED AS SHOWN ON DETAILS. ANCHOR EMBEDMENT TO BASE MATERIAL SHALL BE BEYOND WALL DRESSING OR STUCCO.

ALL STEEL IN CONTACT WITH ALUMINUM TO BE PAINTED OR PLATED.

ANCHORING OR LOADING CONDITIONS NOT SHOWN IN THESE DETAILS ARE NOT PART OF THIS APPROVAL.

A 33% INCREASE IN ALLOWABLE STRESS IS USED IN DESIGN OF ANCHORS.

NO. OF ANCHORS REQD. AT HEAD AT STILE LOCATIONS

SUBSTRATE	THRU WOOD BUCKS INTO MASONRY			DIRECTLY INTO MASONRY			INTO METAL STRUCTURES		
DESIGN LOAD	75 PSF	100 PSF	131 PSF	75 PSF	100 PSF	131 PSF	75 PSF	100 PSF	131 PSF
1/4" SHIM	5	6	7	4	4	4	4	4	5
3/8" SHIM	5	6	7	4	6	6	6	7	8
1/2" SHIM	5	7	8	5	7	8	7	9	10

PRODUCT REVISED
as complying with the Florida
Building Code
Acceptance No. 04-0803.03
Expiration Date 02/07/07
By
Miami Dade Product Control
Division

Engr: DR. HUMAYOUN FAROOQ
STRUCTURES
FLA. PE # 16557
C.A.N. 3838

JUL 27 2004

AL-FAROOQ CORPORATION
ENGINEERS, PLANNERS & PRODUCT DESIGN
1235 SW 87 AVE
MIAMI, FLORIDA 33174
TEL. (305) 264-8100 FAX. (305) 262-6978

COMP-ANL\W01-75RC

SERIES-2400ST ALUM SLD. GLASS DOOR (L.M.)

R.C. ALUMINUM INDUSTRIES INC.
2805 N.W. 75 TH AVE.
MIAMI, FL. 33122
TEL (305) 592-1515 FAX. (305) 592-2184

revisions:

no	date	by	description
A	02.19.02		JAMB ANCHORS REV.
B	01.23.04		FRAME EXTRUSIONS ADDED

date: 11-02-01
scale: 1/2"=1'-0"
dr. by: HAMID
chk. by:

drawing no.
W01-75

sheet 1 of 7

LARGE MISSILE IMPACT RESISTANT DOORS
SHUTTERS NOT REQUIRED

PANEL WIDTH NOMINAL FT./IN.	DOOR HEIGHT FT./IN.	DESIGN LOAD CAPACITY - PSF	
		EXT. (+)	INT. (−)
2/6	8/0	131.0	131.0
3/0		131.0	131.0
3/6		131.0	131.0
4/0		130.3	130.3
4/6		112.3	112.3
5/0		98.5	98.5
2/6	8/6	131.0	131.0
3/0		131.0	131.0
3/6		131.0	131.0
4/0		127.5	127.5
4/6		105.3	105.3
2/6	9/0	131.0	131.0
3/0		131.0	131.0
3/6		131.0	131.0
4/0		120.4	120.4
2/6	9/6	131.0	131.0
3/0		131.0	131.0
3/6		131.0	131.0
4/0		113.8	113.8
2/6	10/0	131.0	131.0
3/0		131.0	131.0
3/6		131.0	131.0
4/0		108.1	108.1

ITEM NO.	PART NUMBER	QUANTITY	DESCRIPTION	MATERIAL	MANF./SUPPLIER/REMARKS
1	2400ST−038	1	FRAME HEAD	6063−T6	−
1A	2400ST−018	1	ALT. FRAME HEAD	6063−T6	−
2	2400ST−039	1	FRAME SILL	6005−T5	−
2A	2400ST−010	1	ALT. FRAME SILL	6005−T5	−
3	2400ST−042	2	FRAME JAMB	6063−T6	−
3A	2400ST−001	2	ALT. FRAME JAMB	6063−T6	−
4	2400ST−008	1/MOV. PANEL	MOVING HORIZ. BOTT. RAIL	6063−T6	−
5	2400ST−009	1/FIX. PANEL	FIXED HORIZ. BOTT. RAIL	6063−T6	−
6	2400ST−006	1/MOV. PANEL	TOP MOVING RAIL	6063−T6	−
7	2400ST−007	1/FIX. PANEL	TOP FIXED RAIL	6063−T6	−
8	2400ST−004	1/FIX. PANEL	JAMB FIXED STILE	6063−T6	−
9	2400ST−002	1	JAMB FIX. STILE/LOCK STILE	6063−T6	−
10	2400ST−037	1/ PANEL	INTERLOCK	6005−T5	−
11	2400ST−005	1	MEETING STILE	6005−T5	−
12	2400ST−012	1	THRESHOLD FILLING TRACK	6063−T6	−
13	2400ST−011	−	SILL TRACK ANCHOR	6005−T5	−
14	2400ST−019	1	HEAD ADAPTER	6063−T6	−
15	2400ST−031	2	SILL TRACK PLATE (5−1/4" X 1/4" X 4" LONG	ALUMINUM	AT EACH END
15A	2400ST−031	3	SILL TRACK PLATE (5−1/4" X 1/4" X 8" LONG	ALUMINUM	AT INTERLOCK/ASTRAGAL STILES
16	2400ST−032	−	MTG. RAIL THRESHOLD SEAL	6063−T5	6" LONG
17	#10 X 1/2"	2	WEATHERSTRIP FASTENERS	−	−
18	V−027	−	BULB W'STRIPPING	VINYL	FP−712 PROTOTYPE
19	WV−2310	−	FLAP WEATHER SEAL	VINYL	WIBORG
20	V−026	−	BULB W'STRIPPING	VINYL	FP−198 PROTOTYPE
21	W31265NK	--	FIN PILE W'STRIPPING	−	ULTRAFAB
22	Q250X270	−	Q−LON W'STRIPPING	−	SCHLEGEL
23	−	−	−	−	−
24	V−020	AS REQD.	GLAZING GASKET (9/16" IMPACT GLASS)	VINYL	WV−1429 WIBORG
25	−	−	−	−	−
26	100−7101	2/MOV. PANEL	TANDEM WHEEL ASSEMBLY	−	WORLD IND. PRODUCTS INTL.
27	10−0030XX	1	STANDARD SLIDE SET LOCK	−	WORLD IND. PRODUCTS INTL.
28	−	1	LOCK KEEPER	−	−
29	−	−	DOOR BUMPER	−	1" DIA. X 3/4" LONG
30	2400ST−040	AS REQD.	INSIDE SCREEN TRACK	6063−T6	−
31	#10 X 1−1/2"	2/ PANEL	PANEL ASSBY. SCREWS	ST/ST	−
32	#10 X 1"	2/ CORNER	FRAME ASSBY. SCREWS	−	−
33	−	2	4−1/4" X .060" X 6" LONG PLATE	ALUMINUM	AT FRAME JAMB BOTTOM
34	−	−	5/8" X 1−1/2" X .1" PLATE @ LOCK STILE BOTTOM	ALUMINUM	FASTENED WITH #8 X 3/8" FH SMS

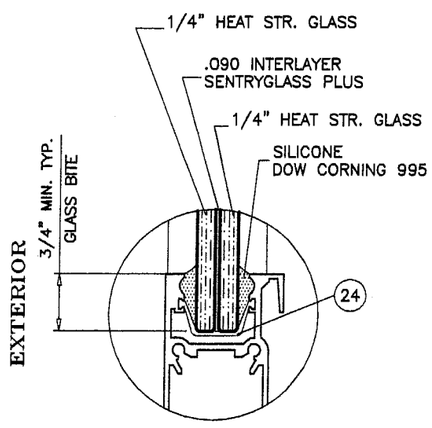

LARGE MISSILE IMPACT RESISTANT
LAMINATED BY 'ARCH ALUM'

GLAZING DETAIL

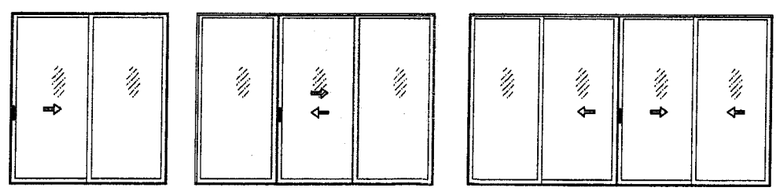

XO (SHOWN)
OX

OXO (SHOWN)

OXXO (SHOWN)

APPROVED CONFIGURATIONS

PRODUCT REVISED
as complying with the Florida Building Code
Acceptance No 04-0803.03
Expiration Date 02/07/07
By
Miami Dade Product Control Division

Engr: DR. HUMAYOUN FAROOQ
STRUCTURES
FLA. PE # 18557
C.A.N. 3538

JUL 27 2004

AL−FAROOQ CORPORATION
ENGINEERS, PLANNERS & PRODUCT DESIGN
1235 SW 87 AVE
MIAMI, FLORIDA 33174
TEL. (305) 264−8100 FAX. (305) 262−6978
COMP−ANL\W01−75RC

SERIES−2400ST ALUM SLD. GLASS DOOR (L.M.)

R.C. ALUMINUM INDUSTRIES INC.
2805 N.W. 75 TH AVE.
MIAMI, FL. 33122
TEL. (305) 592−1515 FAX. (305) 592−2184

revisions:			
no	date	by	description
B	01.23.04		FRAME EXTRUSIONS ADDED

date: 11−02−01
scale: 1/2" = 1"
dr. by: HAMID
chk. by:

drawing no.
W01−75

sheet 2 of 7

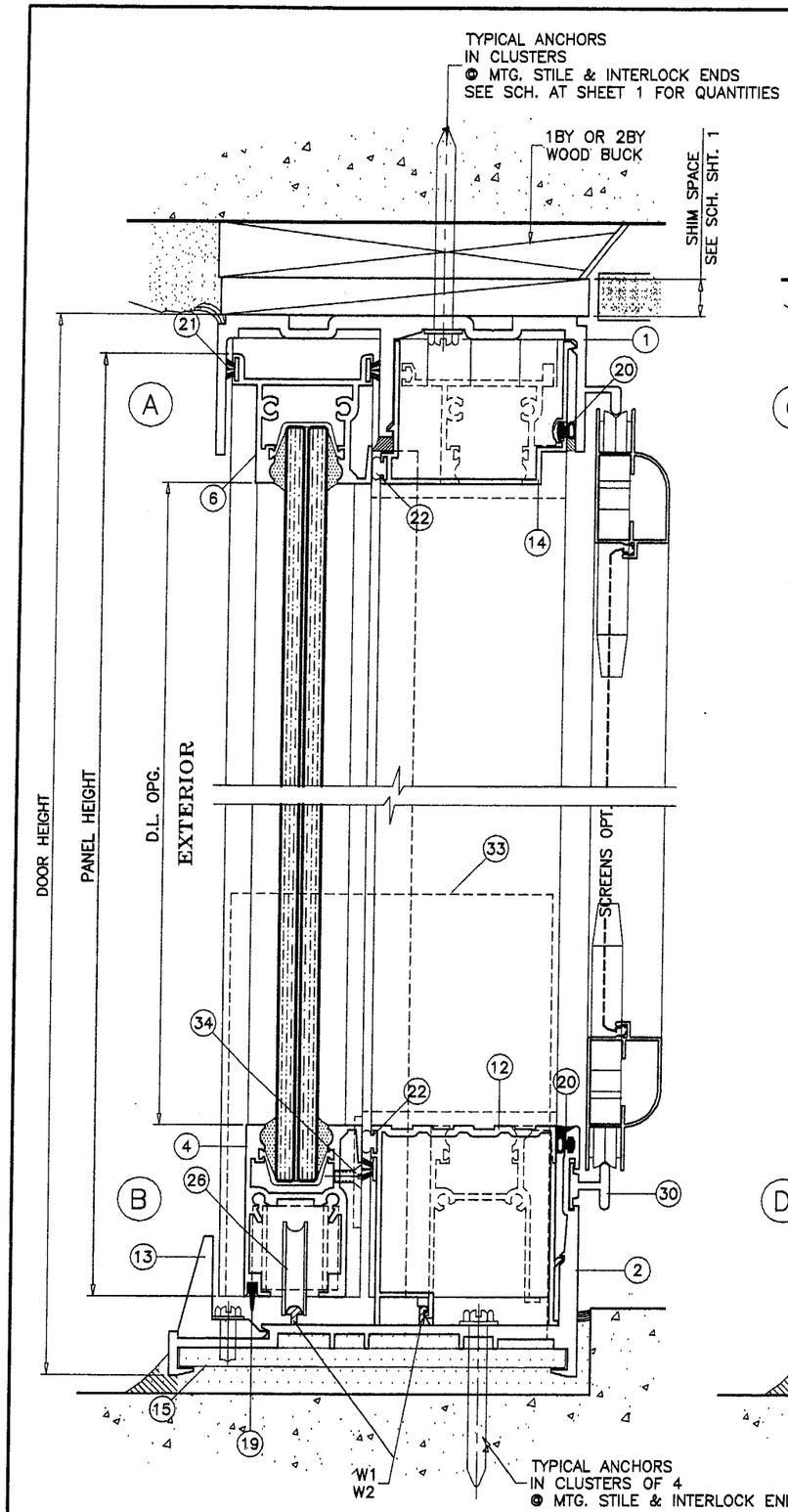

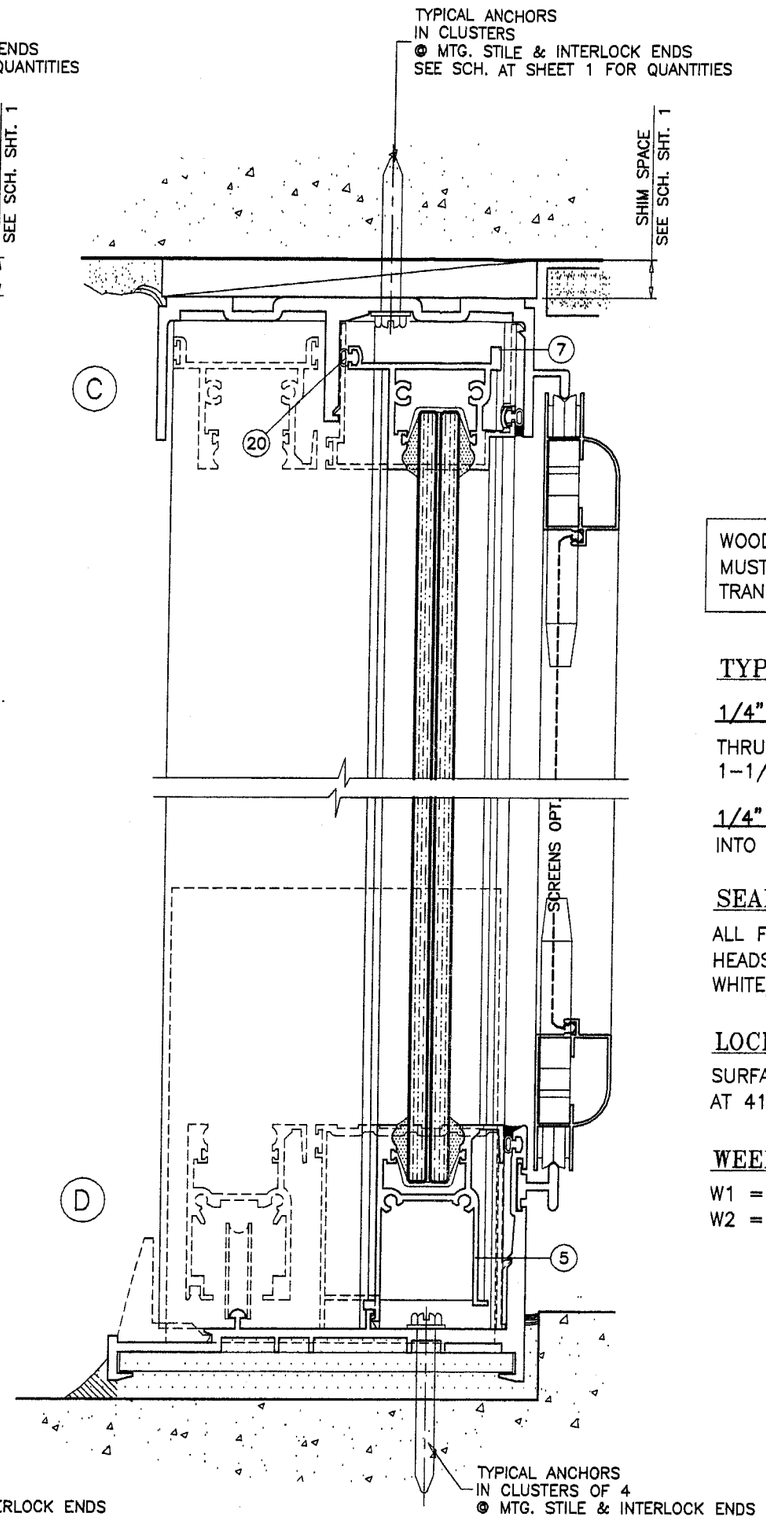

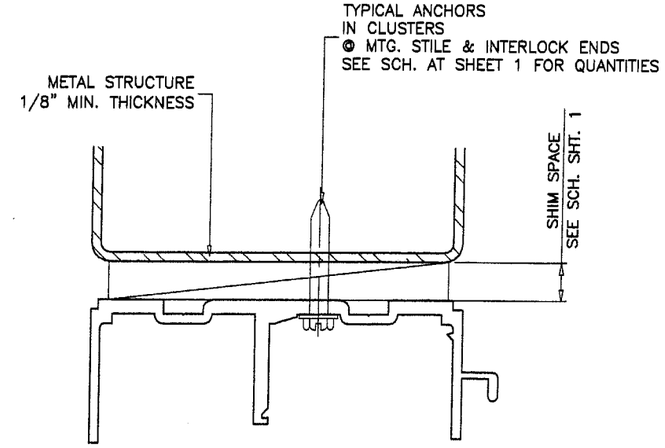

WOOD BUCKS AND METAL STRUCTURES NOT BY RC ALUMINUM MUST SUPPORT LOADS IMPOSED BY GLAZING SYSTEM AND TRANSFER THEM TO THE BUILDING STRUCTURE.

TYPICAL ANCHORS: SEE ELEV. FOR SPACING

1/4" DIA. KWIK-CON II

THRU WOOD BUCKS INTO MASONRY OR DIRECTLY INTO MASONRY
1-1/4" MIN. EMBED INTO CONC. OR MASONRY

1/4" TEKS OR SELF DRILLING SCREWS

INTO METAL STRUCTURES (STEEL OR ALUMINUM 1/8" MIN. THICKNESS)

SEALANTS:

ALL FRAME AND PANEL JOINT, INSTALLATION SCREWS AND HEADS OF ANCHOR SCREWS AT SILL TO BE SEALED WITH WHITE/ALUM COLORED SEALANT.

LOCKS:

SURFACE MOUNT THREE PLY HOOK LOCK BY 'WORLD INDUSTRIAL PRODUCTS' AT 41-1/2" FROM BOTTOM WITH KEEPERS AT LOCK POSITION.

WEEPS:

W1 = 2-1/2" WEEP NOTCH AT SILL CENTER
W2 = 1" NOTCH AT EACH END

PRODUCT REVISED
as complying with the Florida Building Code
Acceptance No. 04-0803.03
Expiration Date 02/07/07
By
Miami-Dade Product Control Division

Engr: DR. HUMAYOUN FAROOQ
STRUCTURES
FLA. PE # 16557
C.A.N. 3538

JUL 27 2004

AL-FAROOQ CORPORATION
ENGINEERS, PLANNERS & PRODUCT DESIGN
1235 SW 87 AVE
MIAMI, FLORIDA 33174
TEL. (305) 264-8100 FAX. (305) 262-6978
COMP-ANL\W01-75RC

SERIES-2400ST ALUM SLD. GLASS DOOR (L.M.)

R.C. ALUMINUM INDUSTRIES INC.
2805 N.W. 75 TH AVE.
MIAMI, FL. 33122
TEL (305) 592-1515 FAX. (305) 592-2184

revisions:			
no	date	by	description
B	01.23.04		FRAME EXTRUSIONS ADDED

date: 11-02-01
scale: 1/2" = 1"
dr. by: HAMID
chk. by:

drawing no. W01-75

sheet 3 of 7

WOOD BUCKS AND METAL STRUCTURES NOT BY RC ALUMINUM MUST SUPPORT LOADS IMPOSED BY GLAZING SYSTEM AND TRANSFER THEM TO THE BUILDING STRUCTURE.

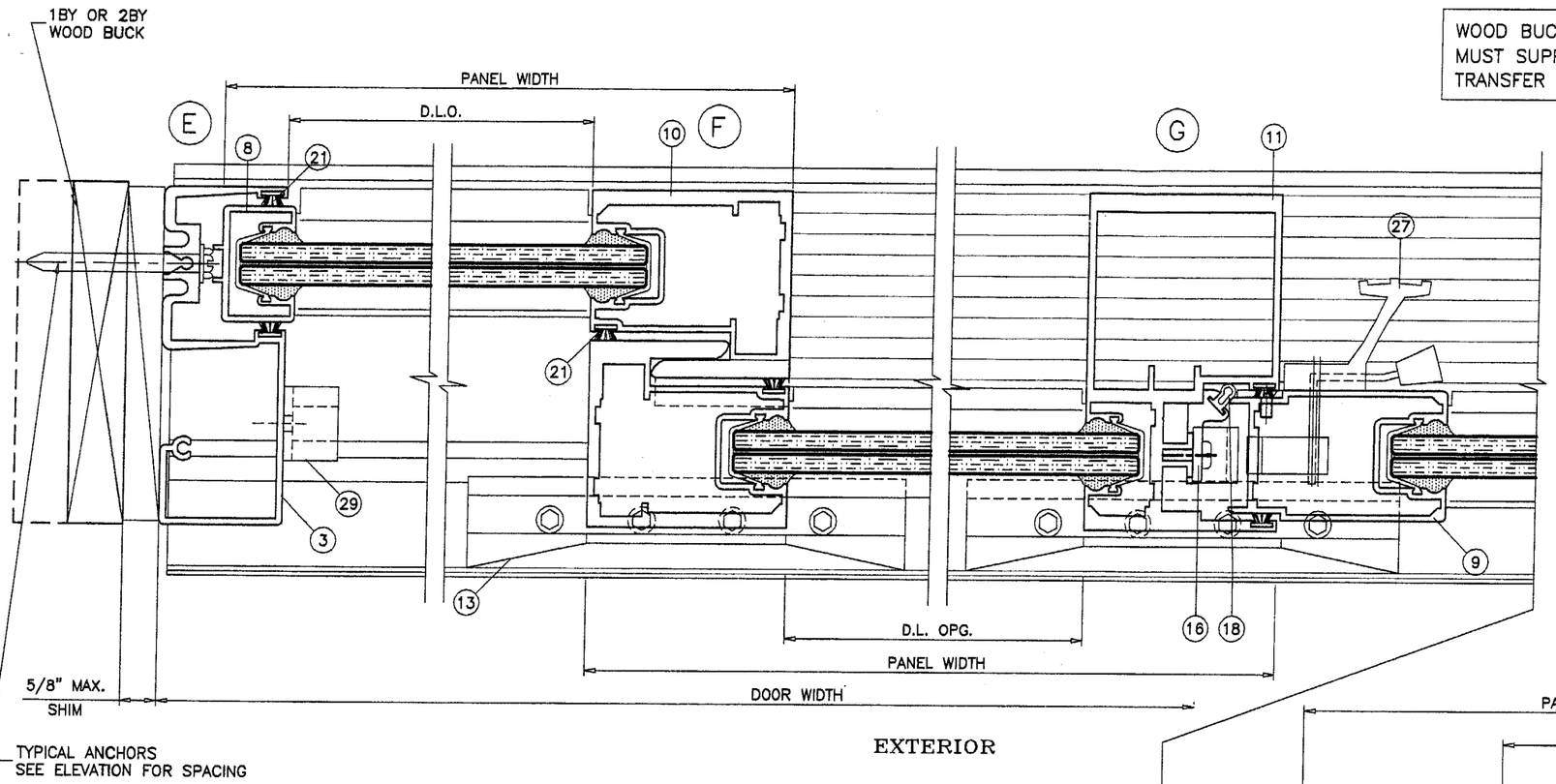

EXTERIOR

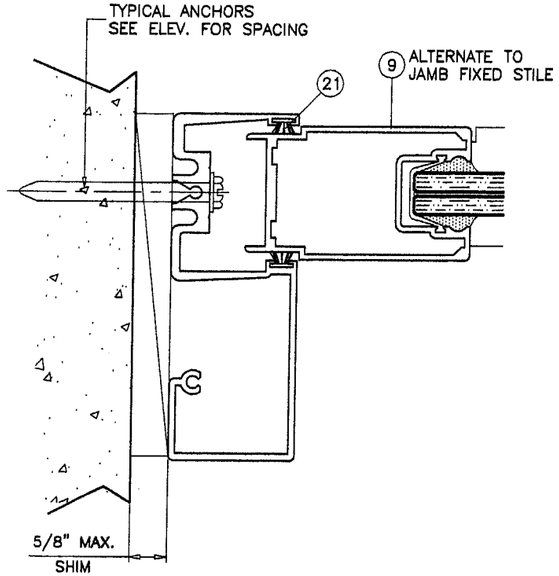

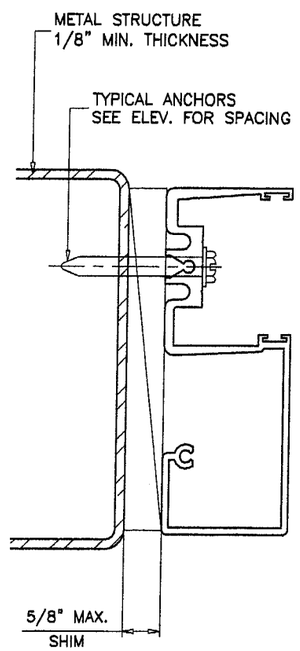

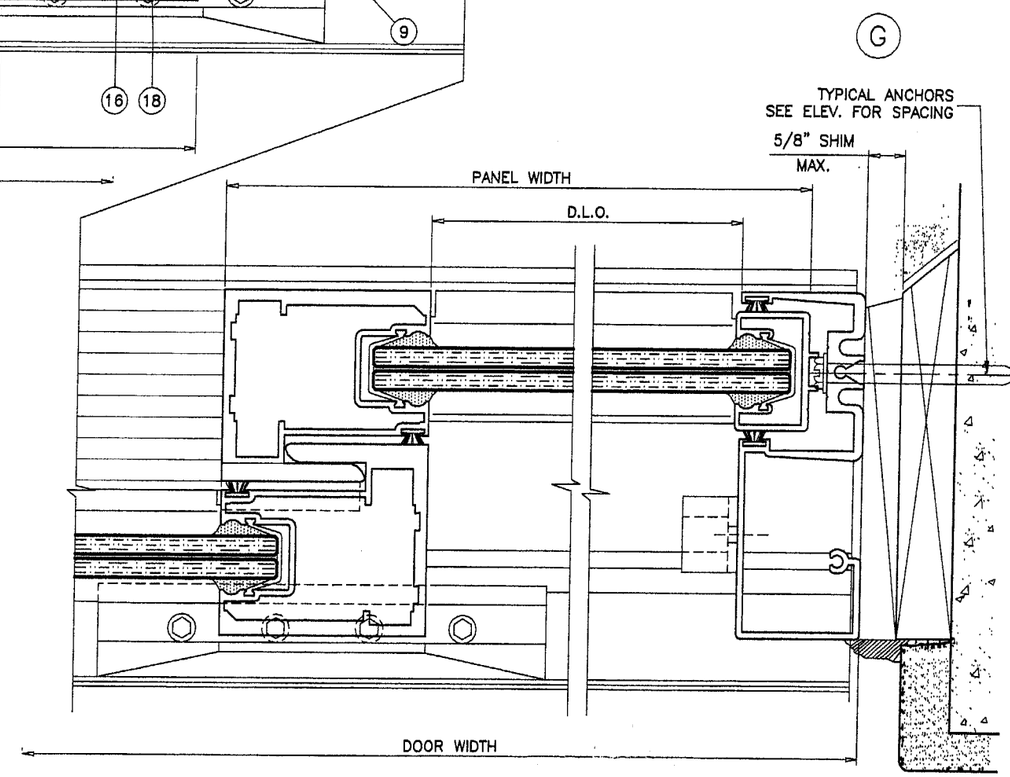

PRODUCT REVISED
as complying with the Florida Building Code
Acceptance No. 04-0803.03
Expiration Date 02/07/07
By
Miami-Dade Product Control Division

Engr: DR. HUMAYOUN FAROOQ
STRUCTURES
FLA. PE # 16557
C.A.N. 3538

JUN 27 2004

AL-FAROOQ CORPORATION
ENGINEERS, PLANNERS & PRODUCT DESIGN
1235 SW 87 AVE
MIAMI, FLORIDA 33174
TEL (305) 264-8100 FAX. (305) 262-6978
COMP-ANL\W01-75RC

SERIES-2400ST ALUM SLD. GLASS DOOR (L.M.)

R.C. ALUMINUM INDUSTRIES INC.
2805 N.W. 75 TH AVE.
MIAMI, FL. 33122
TEL (305) 592-2184 FAX. (305) 592-2184

revisions:

no	date	by	description
B	01.23.04		FRAME EXTRUSIONS ADDED

date: 11-02-01
scale: 1/2" = 1"
dr. by: HAMID
chk. by:

drawing no.
W01-75

sheet 4 of 7

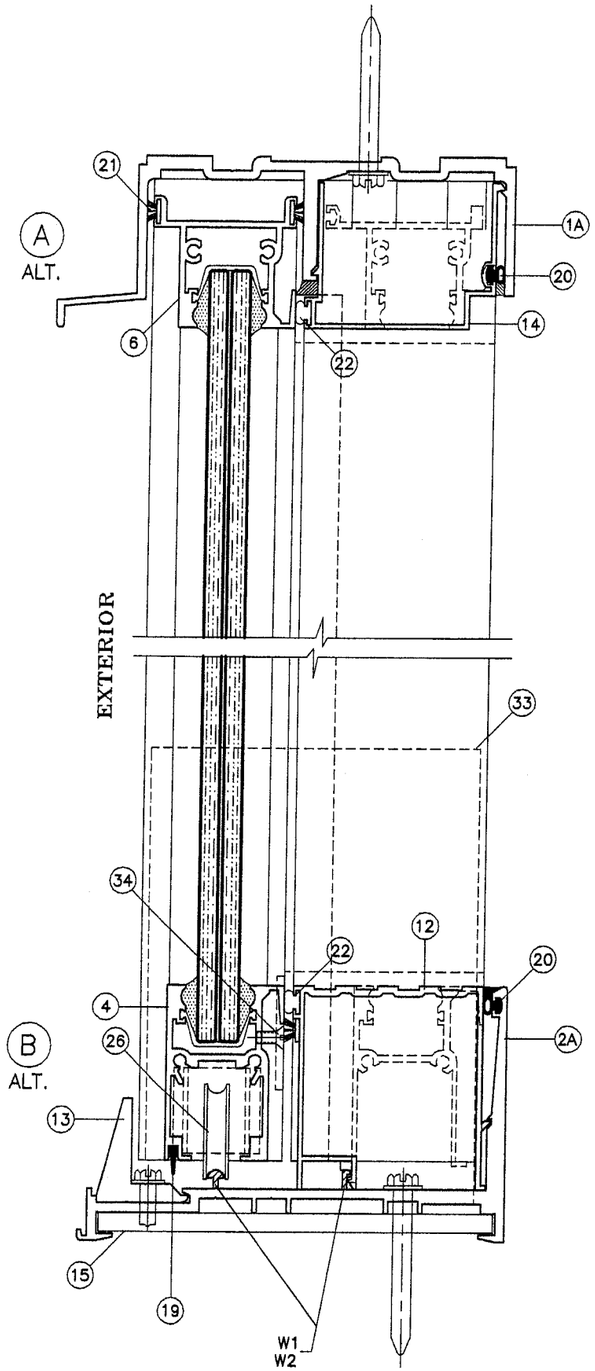

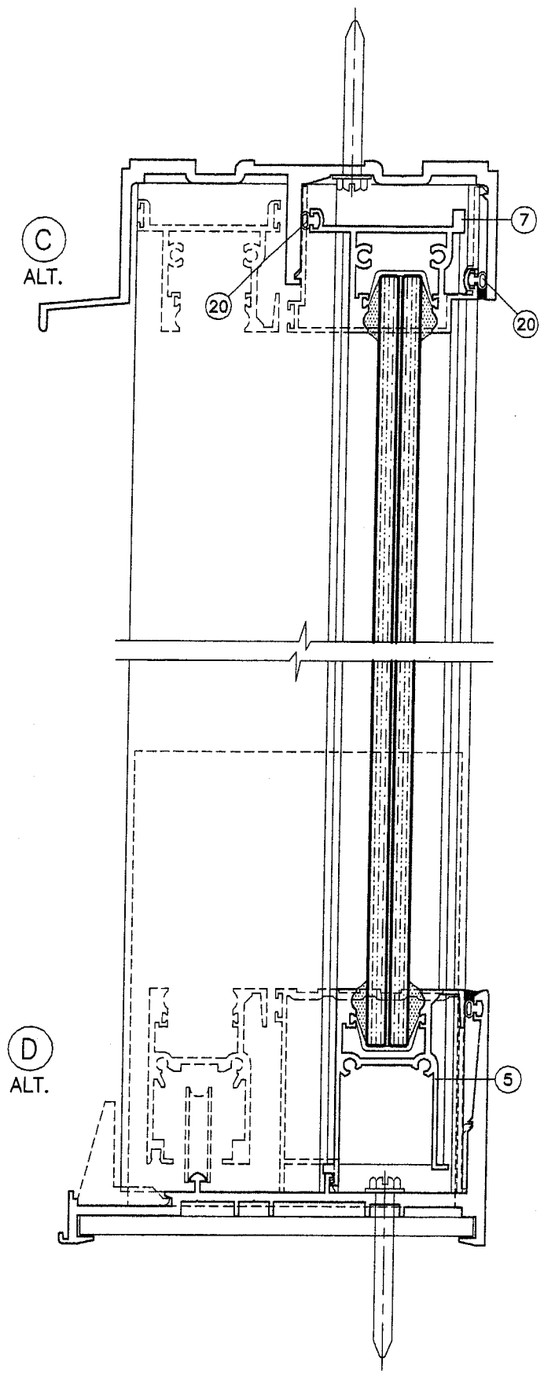

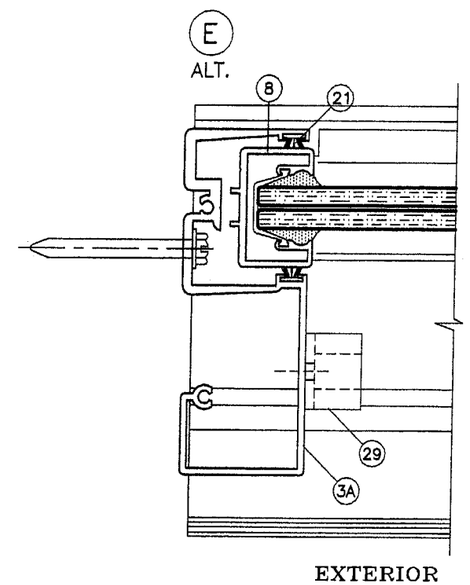

DOOR FRAME WITH OUTSIDE SCREEN OPTION

PRODUCT REVISED
as complying with the Florida
Building Code
Acceptance No. 04-0803.03
Expiration Date 02/07/07
By
Miami-Dade Product Control
Division

Engr: DR. HUMAYOUN FAROOQ
STRUCTURES
FLA. PE # 16557
C.A.N. 3538

JUL 27 2004

AL-FAROOQ CORPORATION
ENGINEERS, PLANNERS & PRODUCT DESIGN
1235 SW 87 AVE
MIAMI, FLORIDA 33174
TEL. (305) 264-8100 FAX. (305) 262-6978
COMP-ANL\W01-75RC

SERIES-2400ST ALUM SLD. GLASS DOOR (L.M.)

R.C. ALUMINUM INDUSTRIES INC.
2805 N.W. 75 TH AVE.
MIAMI, FL. 33122
TEL. (305) 592-2184 FAX. (305) 592-2184

revisions:

no	date	by	description
B	01.23.04		FRAME EXTRUSIONS ADDED

date: 11-02-01
scale: 1/2" = 1"
dr. by: HAMID
chk. by:

drawing no.
W01-75

sheet 5 of 7

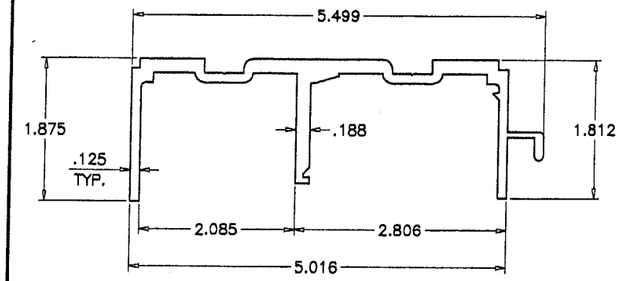

FRAME HEAD

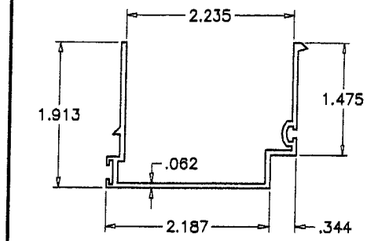

HEAD ADAPTER

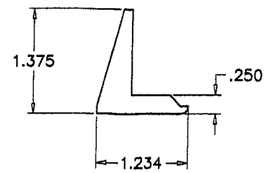

SILL ANCHOR

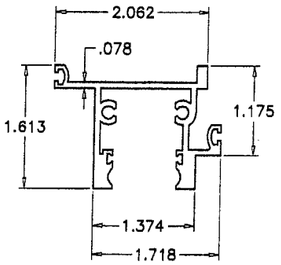

FIX. TOP RAIL

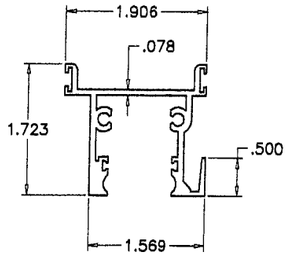

MOV. TOP RAIL

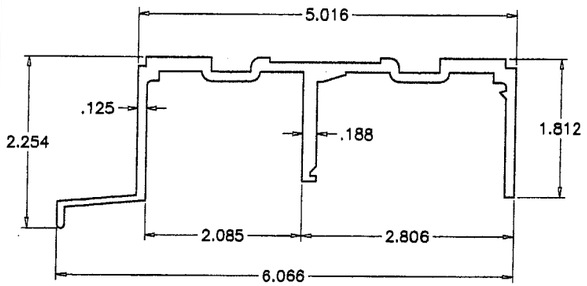

ALT. FRAME HEAD

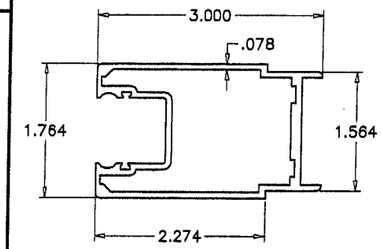

LOCK STILE

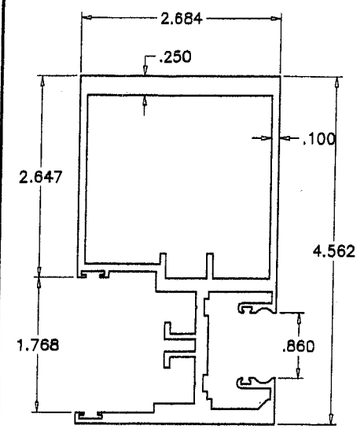

MTG. STILE

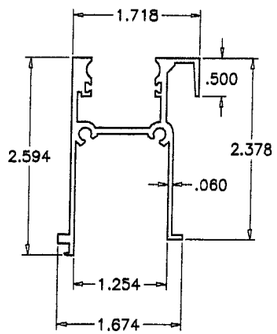

FIX. BOTTOM RAIL

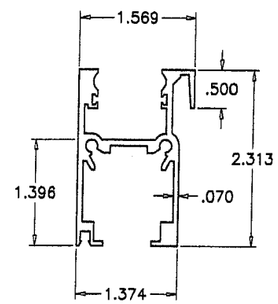

MOVING BOTTOM RAIL

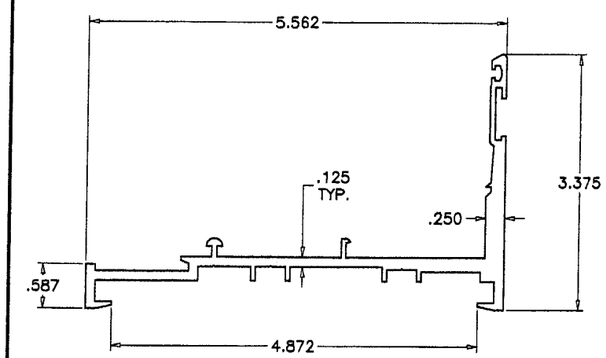

FRAME SILL

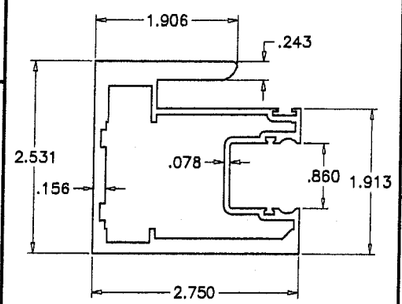

INTERLOCK

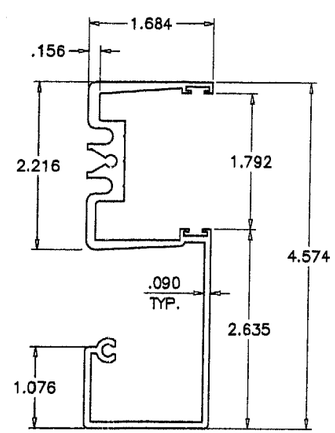

FRAME JAMB

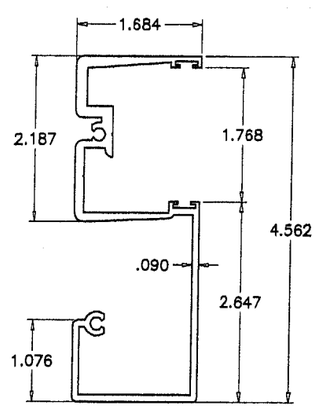

ALT. FRAME JAMB

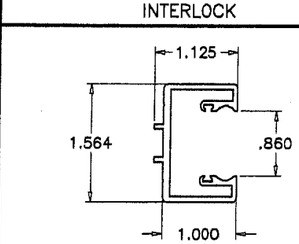

FIXED STILE

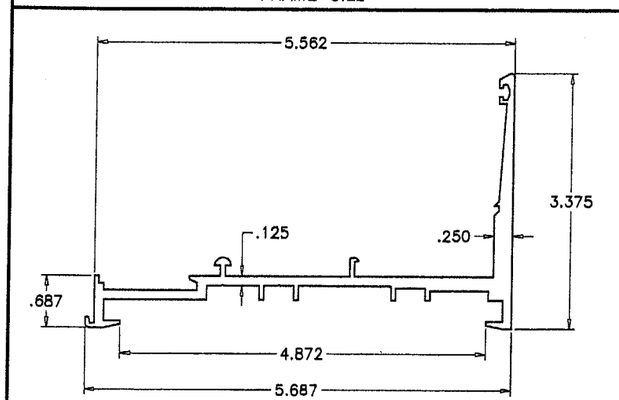

ALT. FRAME SILL

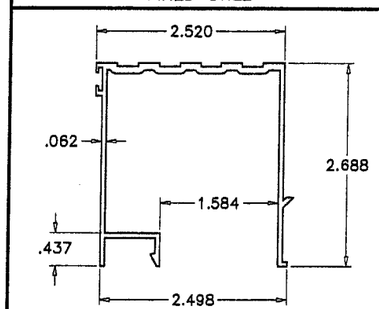

THRESHOLD

PRODUCT REVISED
as complying with the Florida
Building Code
Acceptance No. 04-0803.03
Expiration Date 02/07/07
By
Miami Dade Product Control
Division

Engr: DR. HUMAYOUN FAROOQ
STRUCTURES
FLA. PE # 16557
C.A.N. 3538

JUL 27 2004

AL-FAROOQ CORPORATION
ENGINEERS, PLANNERS & PRODUCT DESIGN
1235 SW 87 AVE
MIAMI, FLORIDA 33174
TEL. (305) 264-8100 FAX. (305) 262-6978
COMP-ANL\W01-75RC

SERIES-2400ST ALUM SLD. GLASS DOOR (L.M.)

R.C. ALUMINUM INDUSTRIES INC.
2805 N.W. 75 TH AVE.
MIAMI, FL. 33122
TEL. (305) 592-1515 FAX. (305) 592-2184

revisions:

no	date	by	description
B	01.23.04		FRAME EXTRUSIONS ADDED

date: 11-02-01
scale: 1/2" = 1"
dr. by: HAMID
chk. by:

drawing no. W01-75

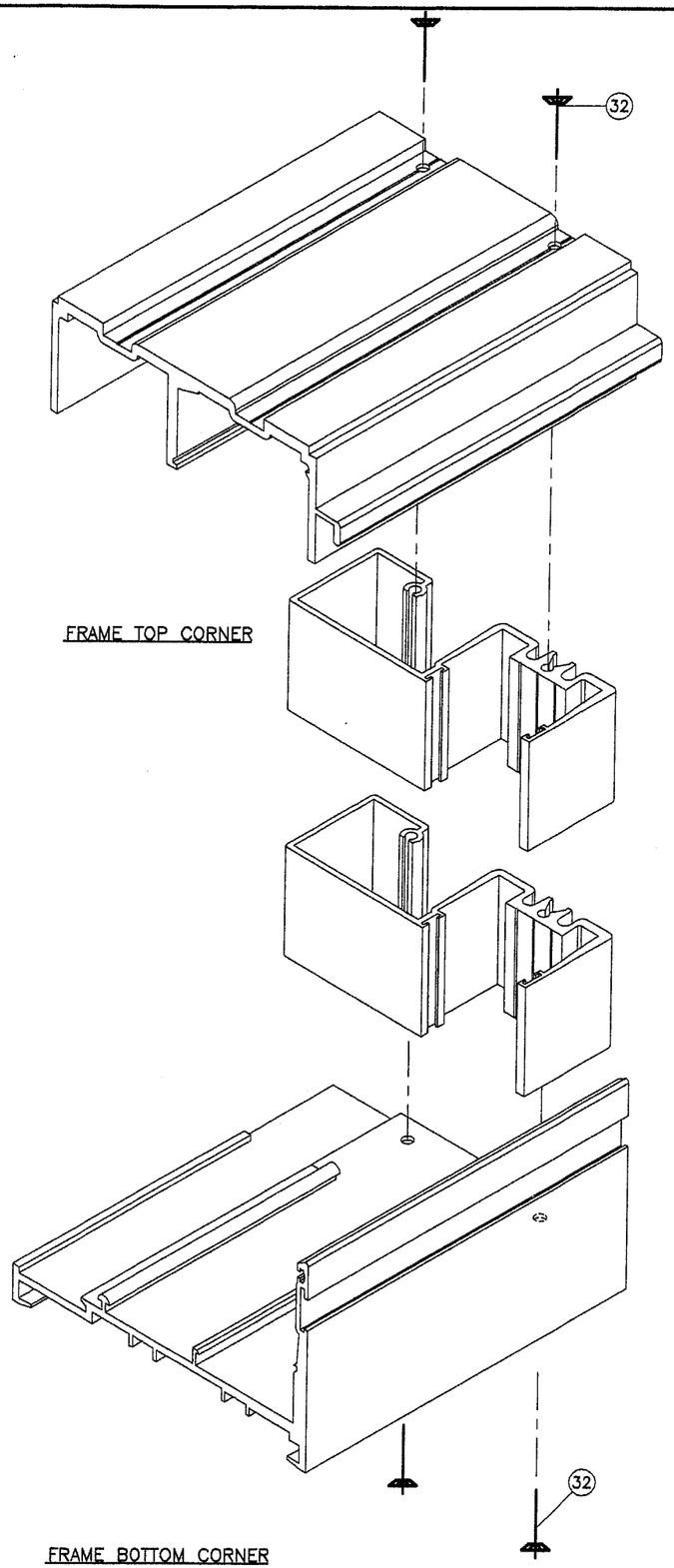

FRAME TOP CORNER

FRAME BOTTOM CORNER

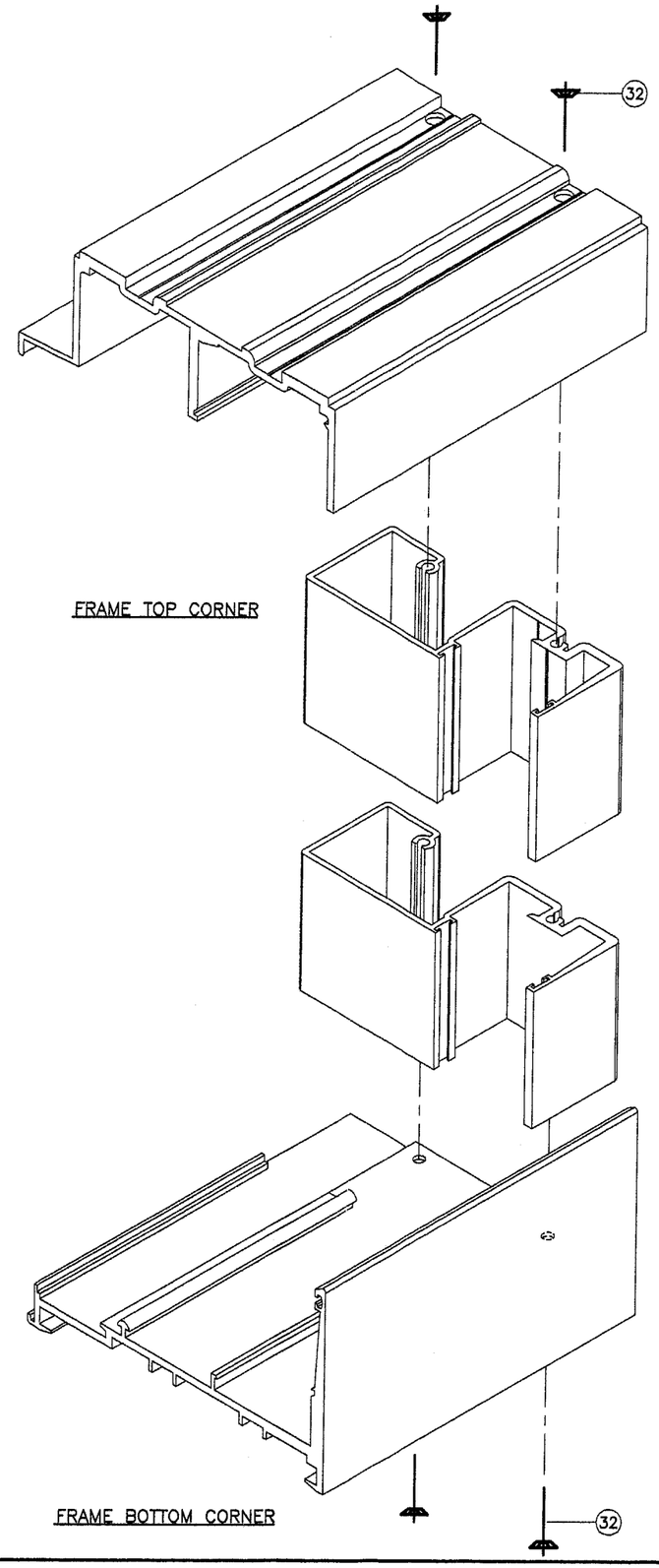

FRAME TOP CORNER

FRAME BOTTOM CORNER

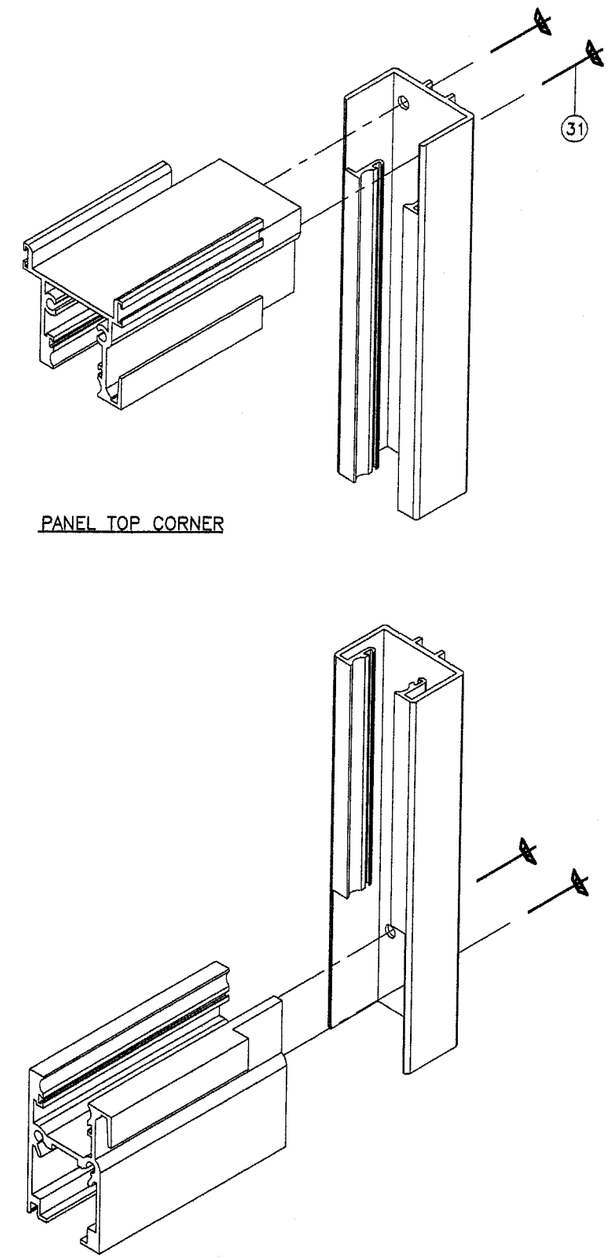

PANEL TOP CORNER

PANEL BOTTOM CORNER

Engr: DR. HUMAYOUN FAROOQ
STRUCTURES
FLA. PE # 16557
C.A.N. 3538

JUL 27 2004

PRODUCT REVISED
as complying with the Florida Building Code
Acceptance No 04-0803.03
Expiration Date 02/07/07
By _____
Miami-Dade Product Control Division

AL-FAROOQ CORPORATION
ENGINEERS, PLANNERS & PRODUCT DESIGN
1235 SW 87 AVE
MIAMI, FLORIDA 33174
TEL. (305) 264-8100 FAX. (305) 262-6978
COMP-ANL\W01-75RC

SERIES-2400ST ALUM SLD. GLASS DOOR (L.M.)

R.C. ALUMINUM INDUSTRIES INC.
2805 N.W. 75 TH AVE.
MIAMI, FL. 33122
TEL. (305) 592-1515 FAX. (305) 592-2184

revisions:

no	date	by	description
B	01.23.04		FRAME EXTRUSIONS ADDED

date: 11-02-01
scale: 1/2" = 1"
dr. by: HAMID
chk. by:

drawing no.
W01-75

sheet 7 of 7