MIAMI-DADE COUNTY
BUILDING CODE COMPLIANCE OFFICE (BCCO)
PRODUCT CONTROL DIVISION

MIAMI-DADE COUNTY, FLORIDA
METRO-DADE FLAGLER BUILDING
140 WEST FLAGLER STREET, SUITE 1603
MIAMI, FLORIDA 33130-1563
(305) 375-2901 FAX (305) 375-2908

# NOTICE OF ACCEPTANCE (NOA)

**PGT Industries**
**1070 Technology Drive**
**Nokomis, FL 34275**

**SCOPE:**
This NOA is being issued under the applicable rules and regulations governing the use of construction materials. The documentation submitted has been reviewed by Miami-Dade County Product Control Division and accepted by the Board of Rules and Appeals (BORA) to be used in Miami Dade County and other areas where allowed by the Authority Having Jurisdiction (AHJ).

This NOA shall not be valid after the expiration date stated below. The Miami-Dade County Product Control Division (In Miami Dade County) and/or the AHJ (in areas other than Miami Dade County) reserve the right to have this product or material tested for quality assurance purposes. If this product or material fails to perform in the accepted manner, the manufacturer will incur the expense of such testing and the AHJ may immediately revoke, modify, or suspend the use of such product or material within their jurisdiction. BORA reserves the right to revoke this acceptance, if it is determined by Miami-Dade County Product Control Division that this product or material fails to meet the requirements of the applicable building code.

This product is approved as described herein, and has been designed to comply with the Florida Building Code, including the High Velocity Hurricane Zone.

**DESCRIPTION: Series "SH 800" Aluminum Single Hung Window – Small Missile Impact**

**APPROVAL DOCUMENT:** Drawing No. **4061**, titled "Multi-Story Alum. Single Hung Window", sheets 1 through 7 of 7, dated 10/4/01 with revision D dated 8/30/04, prepared by manufacturer, signed and sealed by Robert L. Clark, P.E., bearing the Miami-Dade County Product Control Revision stamp with the Notice of Acceptance number and expiration date by the Miami-Dade County Product Control Division.

**MISSILE IMPACT RATING: Small Missile Impact Resistant**

**LABELING:** Each unit shall bear a permanent label with the manufacturer's name or logo, city, state and following statement: "Miami-Dade County Product Control Approved", unless otherwise noted herein.

**RENEWAL** of this NOA shall be considered after a renewal application has been filed and there has been no change in the applicable building code negatively affecting the performance of this product.

**TERMINATION** of this NOA will occur after the expiration date or if there has been a revision or change in the materials, use, and/or manufacture of the product or process. Misuse of this NOA as an endorsement of any product, for sales, advertising or any other purposes shall automatically terminate this NOA. Failure to comply with any section of this NOA shall be cause for termination and removal of NOA.

**ADVERTISEMENT:** The NOA number preceded by the words Miami-Dade County, Florida, and followed by the expiration date may be displayed in advertising literature. If any portion of the NOA is displayed, then it shall be done in its entirety.

**INSPECTION:** A copy of this entire NOA shall be provided to the user by the manufacturer or its distributors and shall be available for inspection at the job site at the request of the Building Official.
This NOA **revises NOA # 02-0123.04** and consists of this page 1 and evidence pages E-1 and E-2, as well as approval document mentioned above.
The submitted documentation was reviewed by **Manuel Perez, P.E.**

PRODUCT CONTROL ACCEPTED

**PGT Industires**

## NOTICE OF ACCEPTANCE: EVIDENCE SUBMITTED

**A. DRAWINGS**

1. Manufacturer's die drawings and sections.
2. Drawing No **4061**, Sheets 1 through 7 of 7, titled "Multi-Story Alum. Single Hung Window", prepared by manufacturer, dated 10/4/01 with revision D dated 8/30/04, signed and sealed by Robert L. Clark, P.E.

**B. TESTS**

1. Test reports on 1) Air Infiltration Test, per FBC, TAS 202-94
   2) Uniform Static Air Pressure Test, Loading per FBC TAS 202-94
   3) Water Resistance Test, per FBC, TAS 202-94
   4) Small Missile Impact Test per FBC, TAS 201-94
   5) Cyclic Wind Pressure Loading per FBC, TAS 203-94
   6) Forced Entry Test, per FBC 3603.2 (b) and TAS 202-94

   along with marked-up drawings and installation diagram of Series SH-800 Aluminum Single Hung Proview Window, prepared by Fenestration Testing Laboratory, Test Report No. **FTL-4006**, dated 01/16/04, signed and sealed by Eduardo Largaespada, P.E.
2. Test reports on 1) Air Infiltration Test, per SFBC, PA 202-94
   2) Uniform Static Air Pressure Test, Loading per SFBC PA 202-94
   3) Water Resistance Test, per SFBC, PA 202-94
   4) Small Missile Impact Test per SFBC, PA 201-94
   5) Cyclic Wind Pressure Loading per SFBC, PA 203-94
   6) Forced Entry Test, per SFBC 3603.2 (b) and PA 202-94

   along with marked-up drawings and installation diagram of a series SH-800 aluminum single hung window, prepared by Fenestration Testing Laboratory, Inc., Test Report No. **FTL-3179**, dated September 24, 2001, signed and sealed by Luis A. Figueredo, P.E. ***(Submitted with previous NOA#02-0123.04)***

**C. CALCULATIONS**

1. Anchor Calculations and structural analysis, prepared by manufacturer, dated 7/22-26/04 and 10/1-6/04, signed and sealed by Robert L. Clark, P.E.

**D. QUALITY ASSURANCE**

1. Miami Dade Building Code Compliance Office (BCCO).

**Manuel Perez, P.E.**
**Product Control Examiner**
**NOA No 04-0809.03**
**Expiration Date: July 3, 2007**
**Approval Date: November 25, 2004**

**PGT Industires**

## NOTICE OF ACCEPTANCE: EVIDENCE SUBMITTED

### E. MATERIAL CERTIFICATIONS

1. Notice of Acceptance No. **00-1212.04** issued to E.I. DuPont DeNemours for **"DuPont Butacite® PVB"** dated 02/15/01, expiring on 12/11/05.
2. Notice of Acceptance No. **01-0205.02** issued to Solutia Inc. for their "**Saflex /Keepsafe Maximum**" dated 05/17/01, expiring on 05/21/06.

### F. STATEMENTS

1. Statement letter of conformance, dated August 5, 2004, signed and sealed by Robert L. Clark, P.E.
2. Statement letter of no financial interest, dated August 5, 2004, signed and sealed by Robert L. Clark, P.E.
3. Laboratory compliance letter for Test Report no. FTL- 4006, issued by Fenestration Test Laboratory, Inc., dated March 22, 2004, signed and sealed by Edmundo Largaespada, P.E.

### G. OTHER

1. Notice of Acceptance No. **02-0123.04**, issued to PGT Industries for their Series "SH-800" Aluminum Single Hung Window, approved on 07/03/02 and expiring on 07/03/07.

**Manuel Perez, P.E.**
**Product Control Examiner**
**NOA No 04-0809.03**
**Expiration Date: July 3, 2007**
**Approval Date: November 25, 2004**

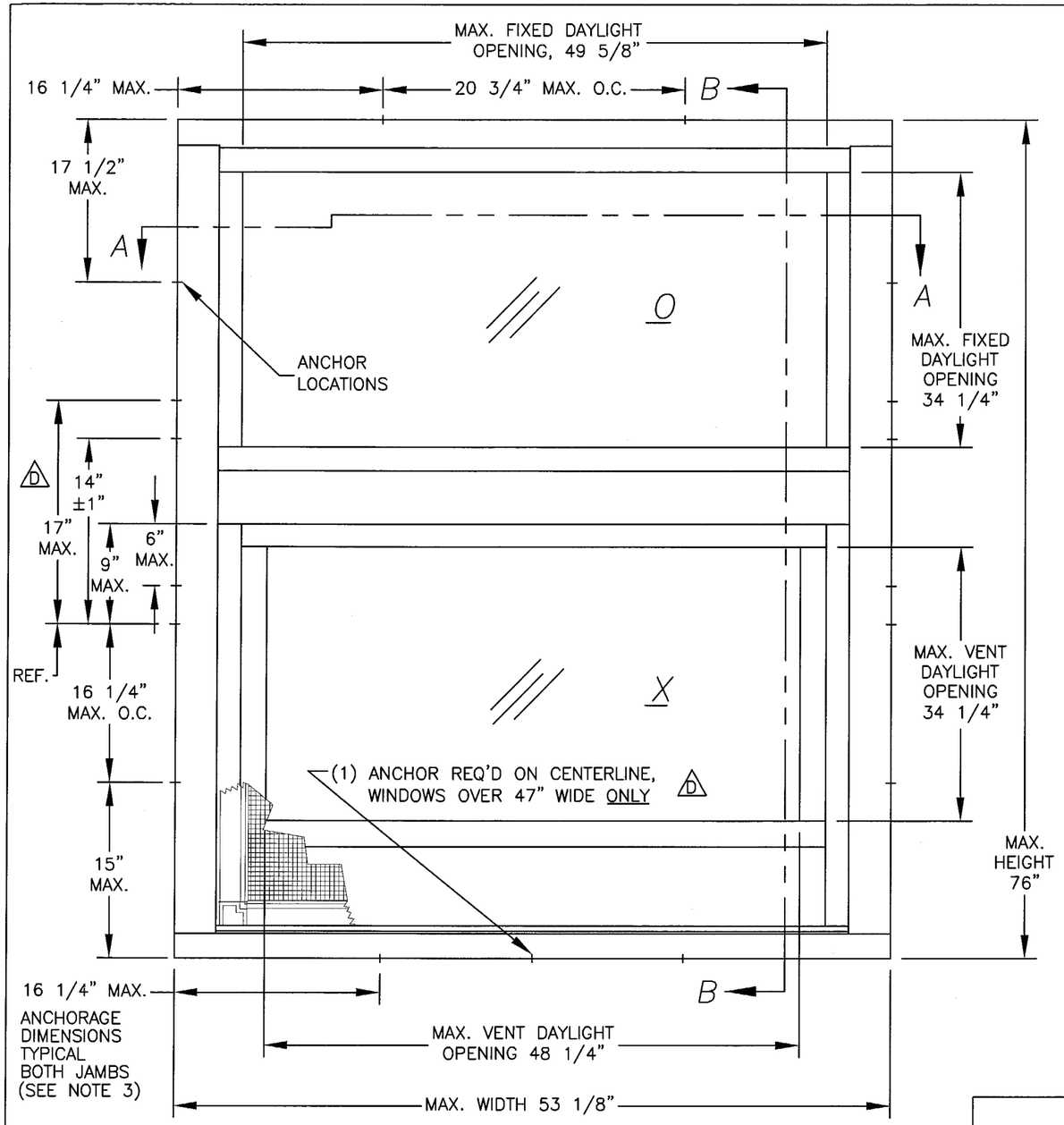


1/1 ELEVATION (SEE SHT. 3 FOR SECT. DETAILS)

TABLE 1.

| DESIGN PRESSURE RATING (P.S.F.) | | | |
|---|---|---|---|
| GLAZING OPTIONS A OR B | | | |
| 1/4" TAPCONS | | #12 SCREWS | |
| −150.0 | +82.0 | −100.4 | +82.0 |

D

# SMALL MISSILE IMPACT SINGLE HUNG WINDOW

1. GLAZING OPTIONS: A. 7/16" LAMINATED GLASS CONSISTING OF (2) LITES OF 3/16" HEAT STRENGTHENED GLASS WITH AN .090 PVB INTERLAYER (DUPONT BUTACITE OR SAFLEX/KEEPSAFE MAXIMUM).
   B. 3/8" LAMINATED GLASS CONSISTING OF (1) LITE OF 1/8" ANNEALED GLASS OUTSIDE, AN .090 PVB INTERLAYER (DUPONT BUTACITE OR SAFLEX/KEEPSAFE MAXIMUM) AND (1) LITE OF 3/16" TEMPERED GLASS INSIDE.
2. DESIGN PRESSURE RATING: SEE TABLE 1 ON SHT 1 AND TABLE 2 ON SHT 2.
   A. NEGATIVE DESIGN LOADS BASED ON TESTED PRESSURE AND GLASS TABLES ASTM E 1300–98.
   B. POSITIVE DESIGN LOADS BASED ON WATER TEST PRESSURE AND GLASS TABLES ASTM E 1300–98.
3. MIAMI–DADE COUNTY ANCHOR SPACING: SINGLE ROW OF 1/4" TAPCONS AS FOLLOWS AND PER SHEET 7 OF 7.
   1/1 HEAD: MAX. 16 1/4" FROM CORNERS AND MAX. 20 3/4" O.C.
   1/1 SILL: MAX. 16 1/4" FROM CORNERS AND MAX. 11 5/8" O.C.
   1/1 JAMBS: MAX. 15" FROM BOTTOM CORNERS AND 17 1/2" FROM TOP CORNERS.
   D MAX. 6" AND 9" BELOW MEETING RAIL.
   TWO ANCHORS ABOVE MEETING RAIL AT 14" AND 17" MAX. FROM MEETING RAIL REF.
   MAX. SPACING 16 1/4" O.C.
   WHEN ANCHORING WITH #12 SCREWS, DESIGN PRESSURE IS LIMITED (SEE TABLE 1)
4. SHUTTER REQUIREMENT: MIAMI–DADE COUNTY APPROVED SHUTTERS ARE REQUIRED AT INSTALLATIONS BELOW 30 FEET. (NON REQ'D AT INSTALLATIONS ABOVE 30 FT. GRADE)
5. NARROW JOINT SEALANT IS USED ON ALL 4 CORNERS OF THE FRAME, MEETING RAIL & ASSEMBLY SCREWS.
6. REFERENCE TEST REPORTS: FTL–3179 & FTL–4006

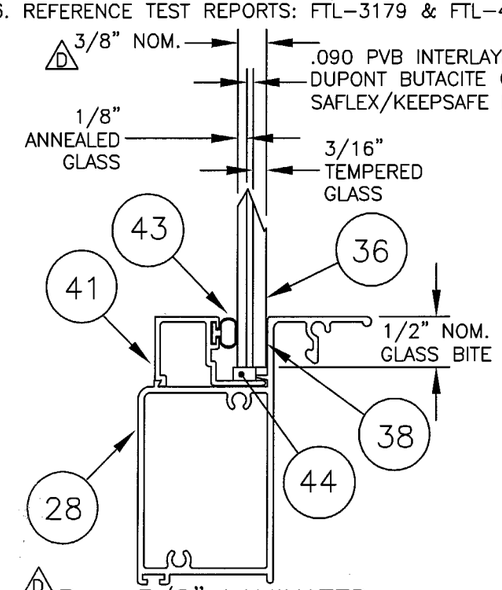


D B – 3/8" LAMINATED

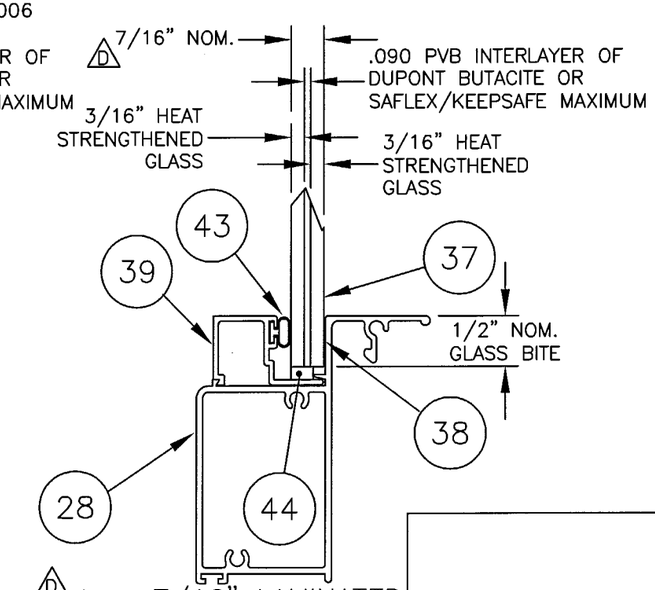


D A – 7/16" LAMINATED

GLAZING OPTIONS

| Revsd By: | Date: | Revisions: |
|---|---|---|
| F.K. | 8/30/04 | D–UPDATES AS NOTED |
| Revsd By: F.K. | Date: 2/2/04 | Revisions: C–UPDATE ANCHORS & NOTES |
| Revsd By: F.K. | Date: 4/29/02 | Revisions: CORRECT MR ANCHORS |
| Revsd By: F.K. | Date: 2/27/02 | Revisions: ADD DESCRIPT ITEM 38 |
| Drawn By: F.K. | Date: 10/4/01 | |

PRODUCT REVISED
as complying with the Florida Buiding Code
Acceptance No 04-0809.03
Expiration Date JULY 3, 2007
By Manuel Perez
Miami/Dade Product Control Division

10/29/04
Robert L. Clark, P.E.
PE #39712
Structural

PGT INDUSTRIES
1070 TECHNOLOGY DRIVE
NOKOMIS, FL 34275
P.O. BOX 1529
NOKOMIS, FL 34274

Description: ELEVATION & GLAZING DETAILS (SM MISSILE)

Title: MULTI–STORY ALUM. SINGLE HUNG WINDOW

| Series/Model: | Scale: | Sheet: | Drawing No. | Rev: |
|---|---|---|---|---|
| SH–800 | NTS | 1 of 7 | 4061 | D |

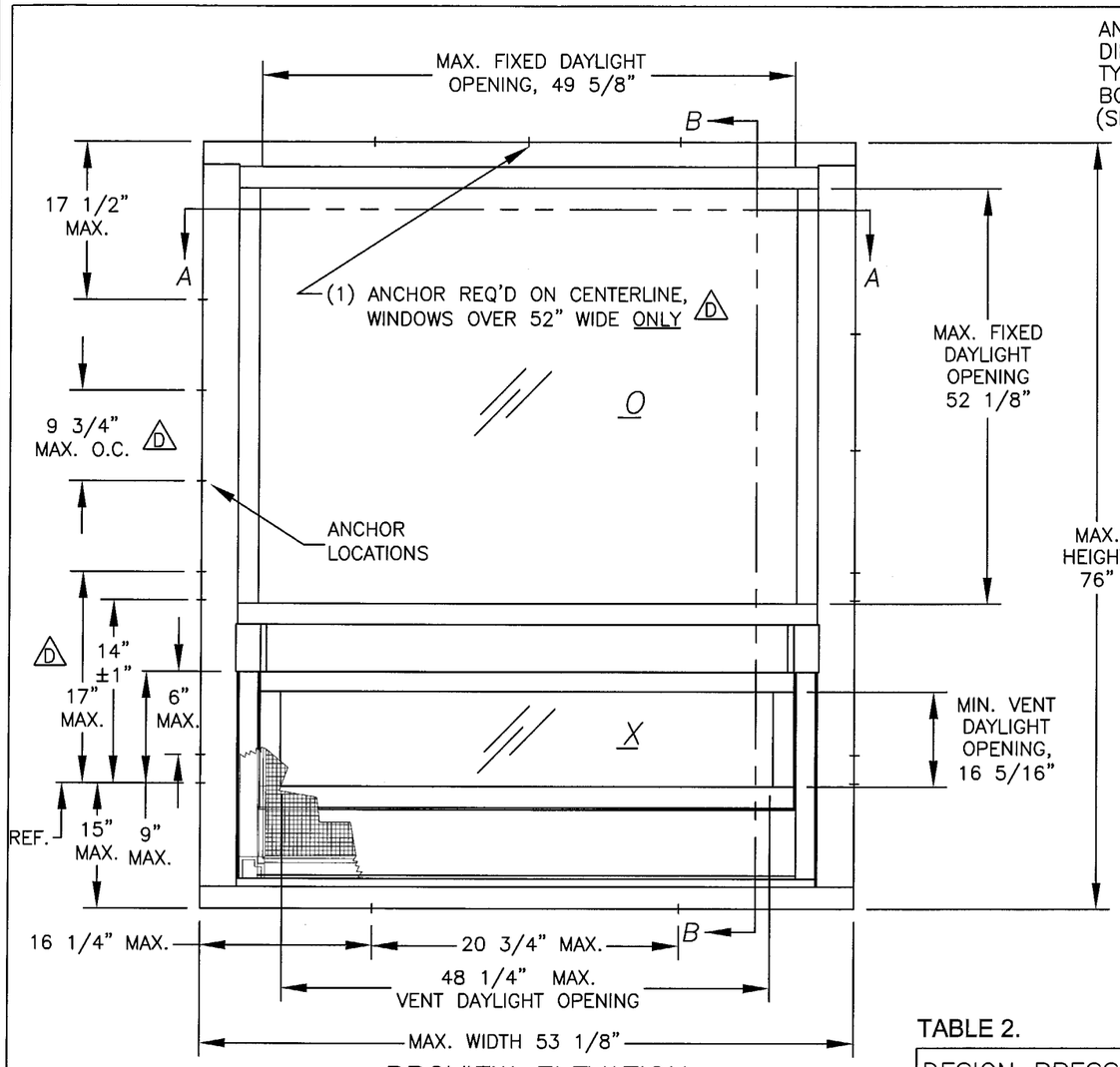


PROVIEW ELEVATION
(SEE SHT 3 FOR SECT. DETAILS)

ANCHORAGE DIMENSIONS TYPICAL BOTH JAMBS (SEE NOTE 1 BELOW)

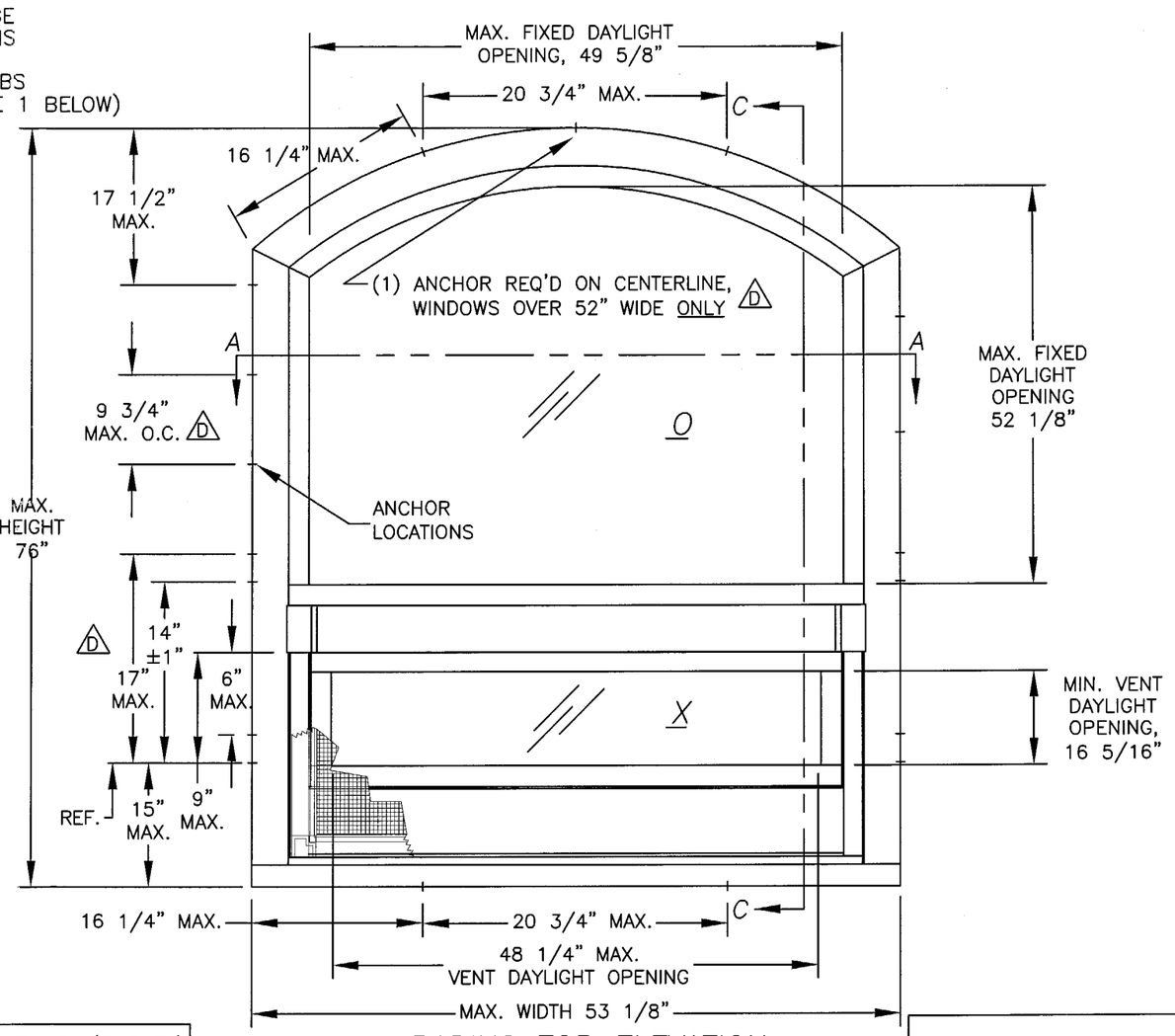


RADIUS TOP ELEVATION
(SEE SHT. 3 FOR HORIZ. SECT. DETAILS)
(SEE SHT. 4 FOR VERT. SECT. DETAILS)

TABLE 2.

| DESIGN PRESSURE RATING (P.S.F.) | | |
|---|---|---|
| GLAZING OPTIONS | | |
| D B | A | A OR B |
| 1/4" TAPCONS | 1/4" TAPCONS | #12 SCREWS |
| −150.0 +90.0 | −142.8 +90.0 | −96.3 +90.0 |

## ANCHORAGE FOR PROVIEW AND RADIUS TOPS:

1. MIAMI–DADE COUNTY ANCHOR SPACING: SINGLE ROW OF TAPCONS AS FOLLOWS AND PER SHEET 7.
   - HEAD: MAX. 16 1/4" FROM CORNERS AND MAX. 20 3/4" O.C.
   - SILL: MAX. 16 1/4" FROM CORNERS AND MAX. 20 3/4" O.C.
   - JAMBS: MAX. 15" FROM BOTTOM CORNERS AND 17 1/2" FROM TOP CORNERS.
     - D MAX. 6" AND 9" BELOW MEETING RAIL.
     - TWO ANCHORS ABOVE MEETING RAIL AT 11" AND 14" MAX. ABOVE MEETING RAIL REF.
     - MAX. SPACING 9 3/4" O.C. ABOVE MEETING RAIL.
2. WHEN ANCHORING WITH #12 SCREWS, DESIGN PRESSURE IS LIMITED (SEE TABLE 2)
3. FOR ANCHORAGE OUTSIDE OF MIAMI–DADE COUNTY, REFER TO APPLICABLE TEST REPORT.

R L Clark
10/29/04

Robert L. Clark, P.E.
PE #39712
Structural

PGT INDUSTRIES

1070 TECHNOLOGY DRIVE
NOKOMIS, FL 34275

P.O. BOX 1529
NOKOMIS, FL 34274

| Revsd By: | Date: | Revisions: |
|---|---|---|
| Revsd By: F.K. | Date: 8/30/04 | Revisions: D–UPDATES AS NOTED |
| Revsd By: F.K. | Date: 2/2/04 | Revisions: C – NEW SHT |
| Drawn By: F.K. | Date: 12/01/03 | REF: FTL–3179 & 4006 |

PRODUCT REVISED
as complying with the Florida Buiding Code
Acceptance No. 04-0809.03
Expiration Date JULY 3, 2007
By Manuel Perez
Miami/Dade Product Control Division

Description: ELEVATIONS, PROVIEW & RADIUS TOP (SM MISSILE)

Title: MULTI–STORY ALUM. SINGLE HUNG WINDOW

| Series/Model: | Scale: | Sheet: | Drawing No. | Rev: |
|---|---|---|---|---|
| SH–800 | NTS | 2 of 7 | 4061 | D |

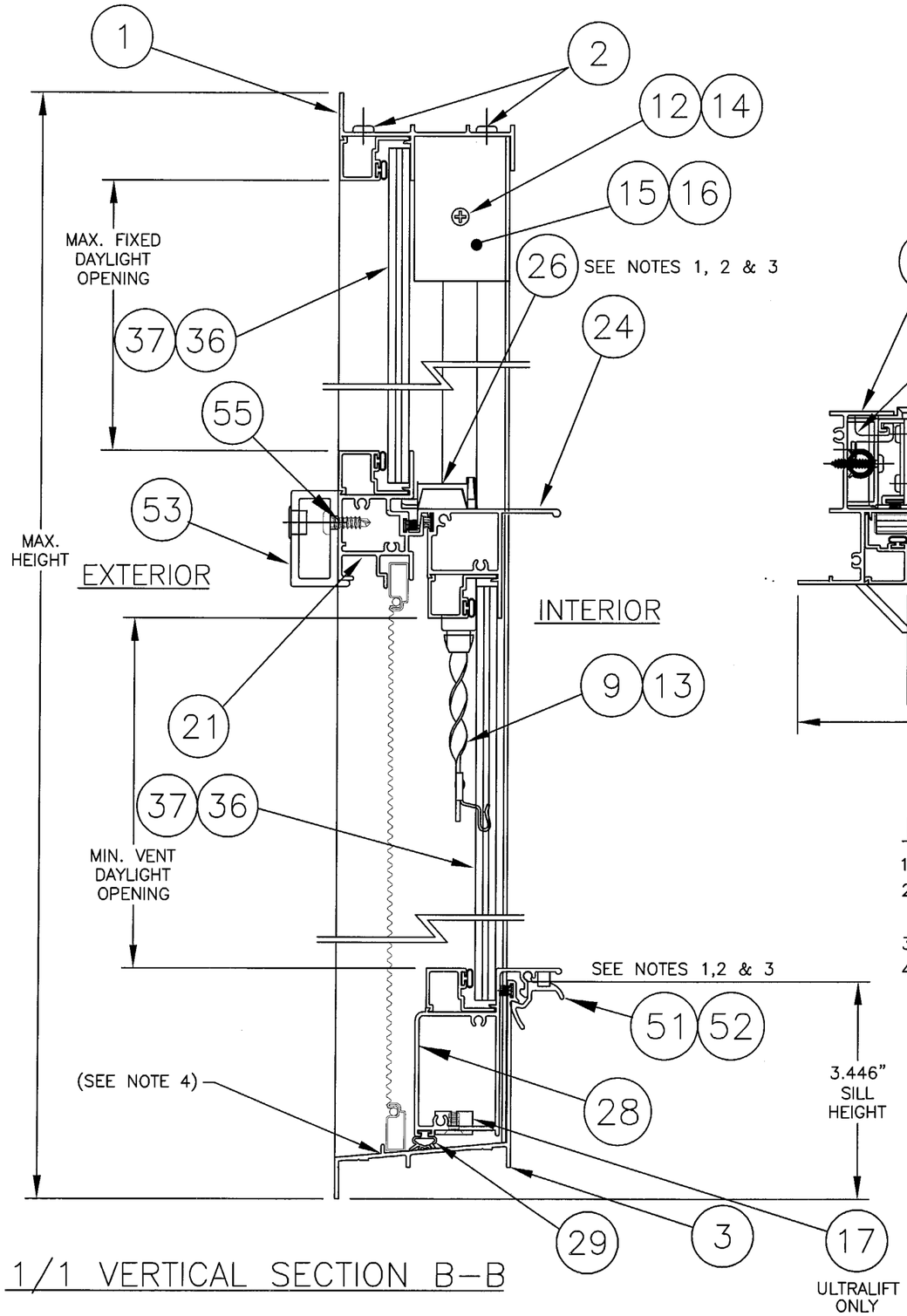


1/1 VERTICAL SECTION B–B

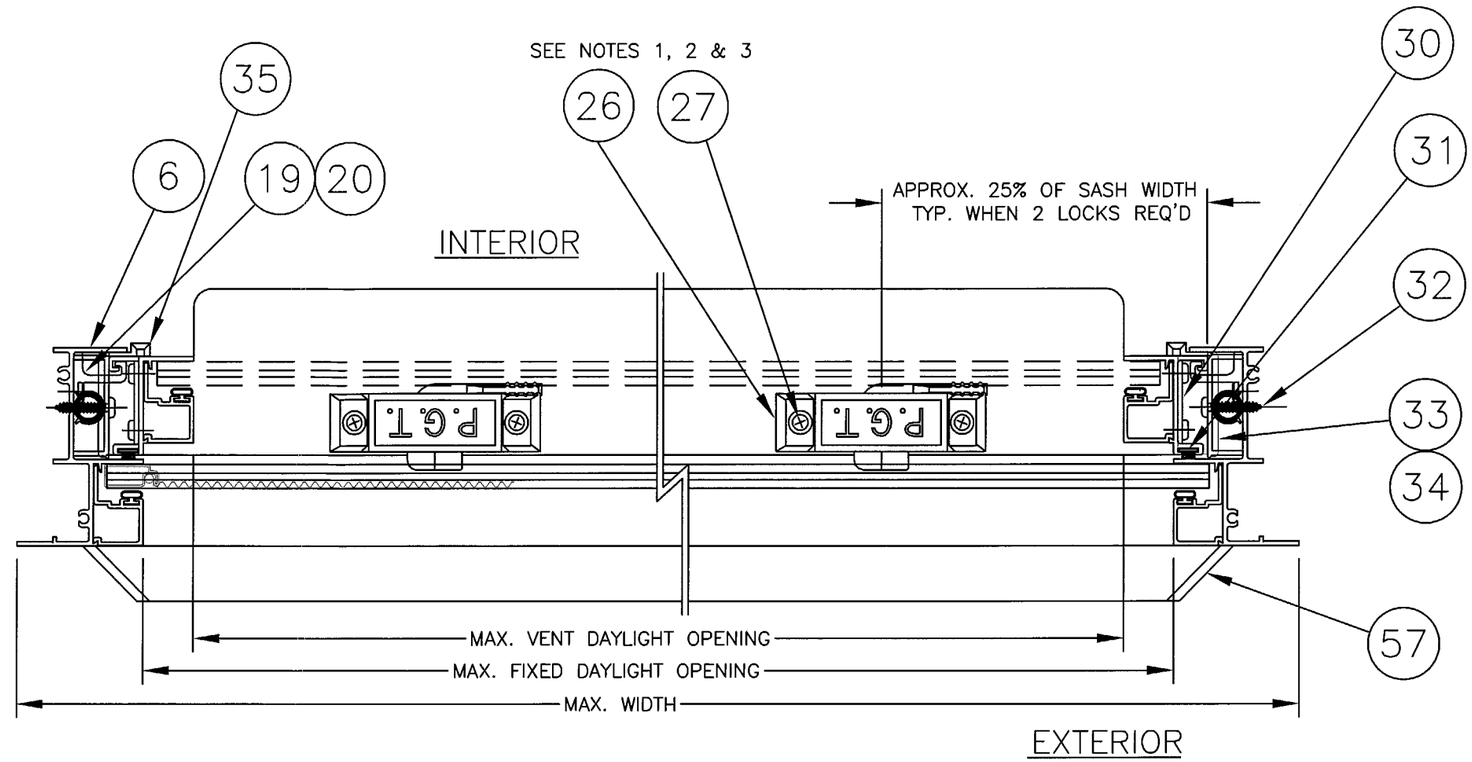


HORIZONTAL SECTION A–A

NOTES:

1. ITEM 26, SWEEP LATCH OR ITEM 51, BOTTOM LOCK MAY BE USED.
2. 1/1 WINDOWS OVER 44" WIDE REQUIRE (2) ITEM 26 OR 51 LOCKS DIMENSIONED AS ABOVE.
   1/1 WINDOWS 44" WIDE OR LESS REQUIRE (1) ITEM 26 OR 51 LOCK CENTERED.
3. PROVIEW AND RADUIS TOP WINDOWS REQUIRE (1) ITEM 26 OR 51 LOCK CENTERED.
4. TWO 5/8" WEEP NOTCHES REQUIRED (ONE AT EACH END OF SILL, SCREEN RETAINER LEG).

| Revsd By: | Date: | Revisions: |
|---|---|---|
| F.K. | 8/30/04 | D–NO CHG THIS SHT |
| F.K. | 2/2/04 | C–ADD PROVIEW & RAD. TOP |
| F.K. | 4/29/02 | NO CHG THIS SHT |
| F.K. | 2/27/02 | ADD DESCRIPT ITEM 38 |
| Drawn By: F.K. | 10/4/01 | REF: FTL–3179 & 4006 |

PRODUCT REVISED
as complying with the Florida Buiding Code
Acceptance No. 04-0809.03
Expiration Date JULY 3, 2007
By Manuel Perez
Miami-Dade Product Control Division

10/29/04
Robert L. Clark, P.E.
PE #39712
Structural

PGT INDUSTRIES
1070 TECHNOLOGY DRIVE
NOKOMIS, FL 34275
P.O. BOX 1529
NOKOMIS, FL 34274

Description: SECTIONS

Title: MULTI–STORY ALUM. SINGLE HUNG WINDOW

| Series/Model: | Scale: | Sheet: | Drawing No. | Rev: |
|---|---|---|---|---|
| SH–800 | NTS | 3 of 7 | 4061 | D |

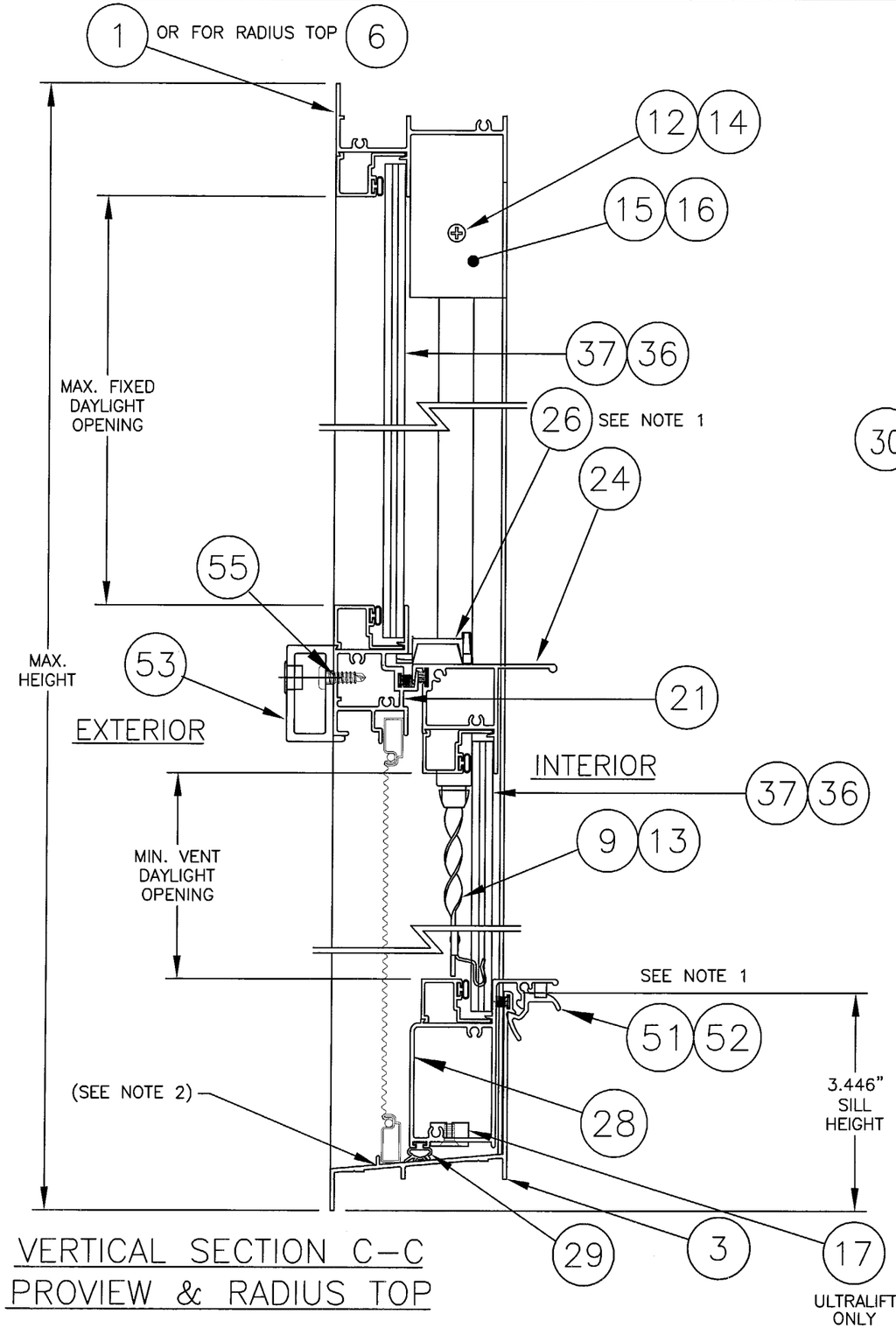


VERTICAL SECTION C–C
PROVIEW & RADIUS TOP

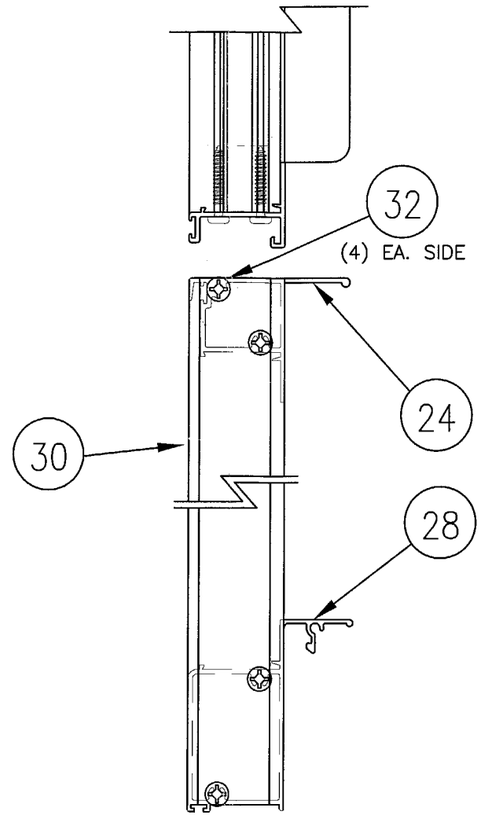


SASH CONSTRUCTION

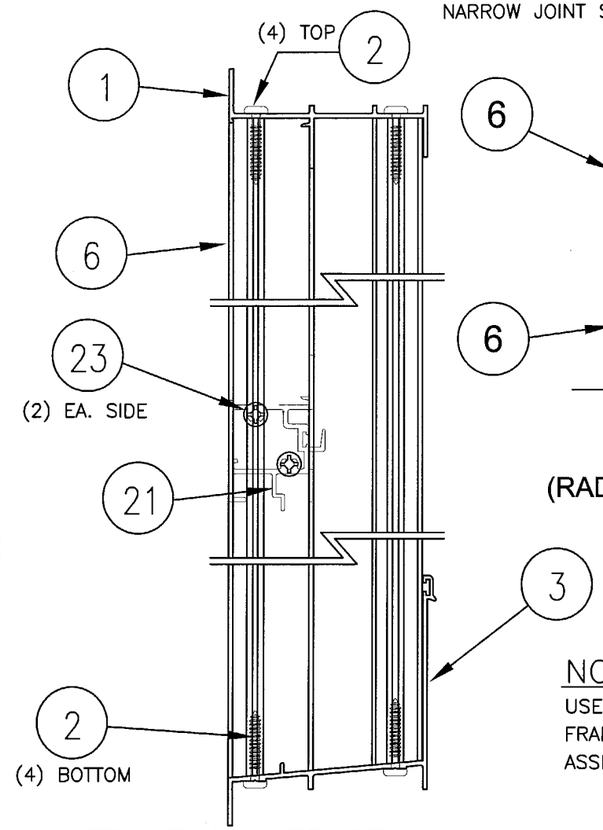


FRAME CONSTRUCTION (90° CORNERS)

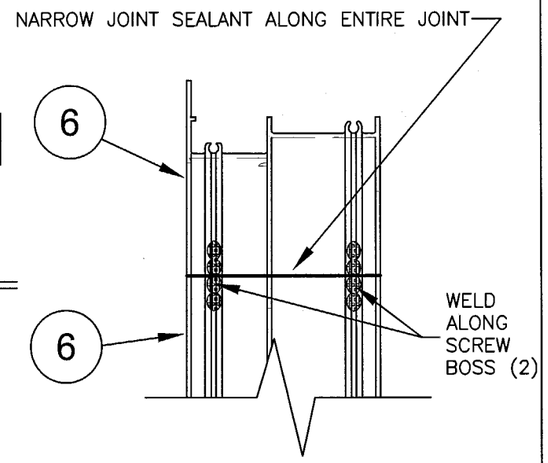


(RADIUS TOP HEAD ONLY)

NOTE: NARROW JOINT SEALANT IS USED ON ALL 4 CORNERS OF THE FRAME, MEETING RAIL & RESPECTIVE ASSEMBLY SCREWS.

NOTES:

1. PROVIEW AND RADUIS TOP WINDOWS REQUIRE (1) ITEM 26 OR 51 LOCK CENTERED.
2. TWO 5/8" WEEP NOTCHES REQUIRED (ONE AT EACH END OF SILL, SCREEN RETAINER LEG).

PRODUCT REVISED
as complying with the Florida Building Code
Acceptance No 04-0809.03
Expiration Date JULY 3, 2007
By Manuel Perez
Miami-Dade Product Control Division

10/29/04

Robert L. Clark, P.E.
PE #39712
Structural

PGT INDUSTRIES

1070 TECHNOLOGY DRIVE
NOKOMIS, FL 34275

P.O. BOX 1529
NOKOMIS, FL 34274

| Revsd By: | Date: | Revisions: |
|---|---|---|
| Revsd By: F.K. | Date: 8/30/04 | Revisions: D–NO CHG THIS SHT |
| Revsd By: F.K. | Date: 2/02/04 | Revisions: C – NEW SHT |
| Drawn By: F.K. | Date: 2/02/04 | REF: FTL–4006 |

Description: VERTICAL SECTION, PROVIEW & RADIUS TOP

Title: MULTI–STORY ALUM. SINGLE HUNG WINDOW

| Series/Model: | Scale: | Sheet: | Drawing No. | Rev: |
|---|---|---|---|---|
| SH–800 | NTS | 4 of 7 | 4061 | D |

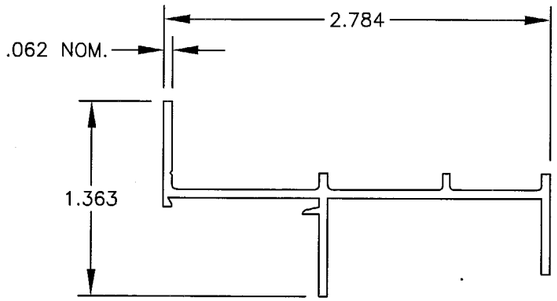


(1) FLANGE FRAME HEAD
MAT'L: 6063-T5
DWG# 4002

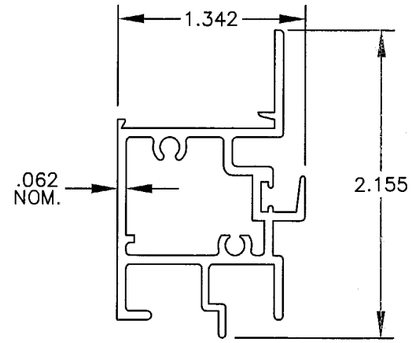


(21) FXD. MEETING RAIL
MAT'L: 6063HS-T54
DWG# 4054A

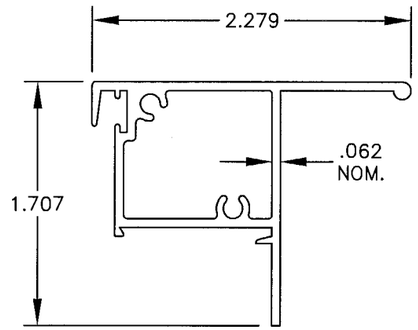


(24) SASH TOP RAIL
MAT'L: 6063HS-T54
DWG# 4006C

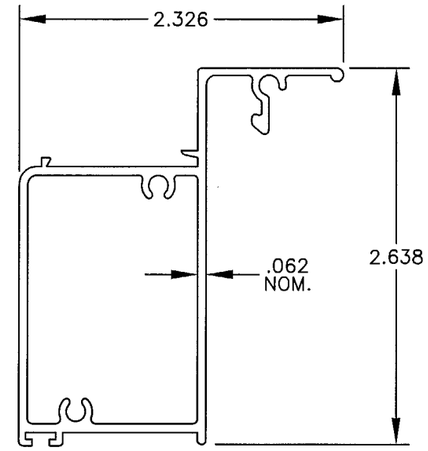


(28) SASH BOT. RAIL
MAT'L: 6063-T5
DWG# 4051A

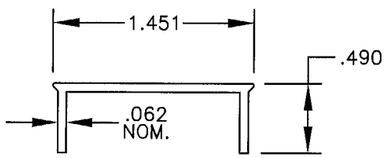


(7) SASH STOP
MAT'L: 6063-T5
DWG# 4025

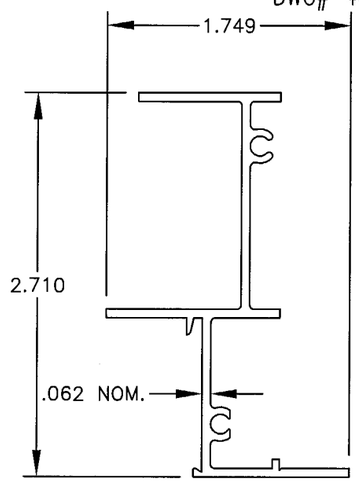


(6) FLANGE FRAME JAMB
MAT'L: 6063-T5
DWG# 4004

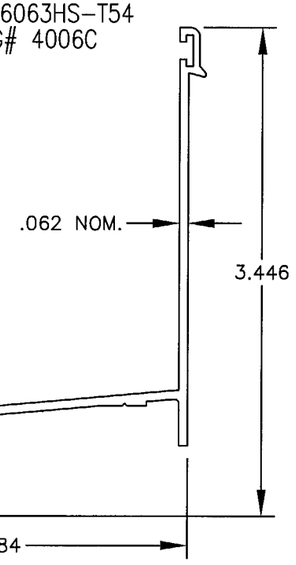


(3) FLANGE FRAME SILL
MAT'L: 6063-T5
DWG# 4050A

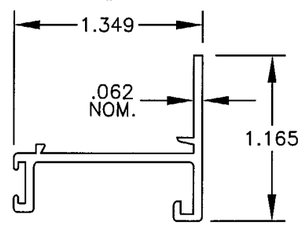


(30) SASH SIDE RAIL
MAT'L: 6063-T5
DWG# 4008

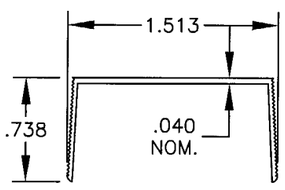


(16) SASH STOP COVER
MAT'L: 6063-T5
DWG# 4053

| Revsd By: | Date: | Revisions: |
|---|---|---|
| F.K. | 8/30/04 | C-NO CHG THIS SHT |
| F.K. | 2/02/04 | C-NO CHG THIS SHT |
| F.K. | 4/29/02 | NO CHG THIS SHT |
| F.K. | 2/27/02 | ADD DESCRIPT ITEM 38 |
| Drawn By: F.K. | Date: 10/4/01 | REF: FTL-3179 & 4006 |

PRODUCT REVISED
as complying with the Florida Building Code
Acceptance No. 04-0809.03
Expiration Date JULY 3, 2007
By Manuel Perez
Miami-Dade Product Control Division

Robert L. Clark, P.E.
PE #39712
Structural
10/29/04

PGT INDUSTRIES

1070 TECHNOLOGY DRIVE
NOKOMIS, FL 34275

P.O. BOX 1529
NOKOMIS, FL 34274

Description: EXTRUSION PROFILES

Title: MULTI-STORY ALUM. SINGLE HUNG WINDOW

| Series/Model: | Scale: | Sheet: | Drawing No. | Rev: |
|---|---|---|---|---|
| SH-800 | NTS | 5 of 7 | 4061 | D |

| ITEM | DWG# | MAT'L | PGT# | DESCRIPTION |
|---|---|---|---|---|
| 1 | 4002 | 6063-T5 | 612225 | Flange Frame Head |
| 2 | 1155-1 | S. STL | 781PQX | #8 x 1" S.S. Quad Pn. SMS |
| 3 | 4050A | 6063-T5 | 64050 | Flange Frame Sill |
| 4 | 1062 | FIN SEAL | 61062G | Wstp., .187 x .270 fin seal |
| 5 | 1155-1 | S. STL | 781PQX | #8 x 1" S.S. Quad Pn. SMS |
| 6 | 4004 | 6063-T5 | 612227 | Flange Frame Jamb |
| 9 | 4029 | | | Caldwell Spiral Balance, 5/8" |
| 10 | 4029 | STL | 7BALTBKT | Balance Bottom Bracket Clip |
| 11 | 1080 | VINYL | 6BALCVR916 | Bal. Cover, Rigid Vinyl, 5/8" |
| 12 | 1167 | S. STL | 78X34PPAX | #8 x .750 Ph. Pn. SMS S.S. |
| 13 | 4029-1 | | | Caldwell Ultra-Lift Balance, .670" |
| 14 | | S. STL | | #8 x 1.25 PH. Pn. SMS |
| 15 | 4025 | 6063-T5 | 612244 | Sash Stop |
| 16 | 4053 | 6063-T5 | | Sash Stop Cover |
| 17 | 4029-1 | STL | | Sash Bracket |
| 18 | | ZINC PL. | | #8 x 1 PH. PN. SMS |
| 19 | 1207 | PVC | 6WCLIP | Windload Adapter |
| 20 | | S. STL | 78X38PPTX | #8 x .375 Ph. Pn. TEK S.S. |
| 21 | 4054A | 6063HS-T54 | 64054 | Fixed Meeting Rail |
| 22 | 4066 | FIN SEAL | 64066G | Wstp.,.187 x .230, fin seal |
| 23 | 1155-1 | S. STL | 781PQX | #8 x 1" S.S. Quad Pn. SMS |
| 24 | 4006C | 6063HS-T54 | 64006 | Sash Top Rail |
| 25 | 1235 | FIN SEAL | 67S16G | Wstp.,.170 x .270 back, fin seal |
| 26 | 1096 | DIE-CAST | 71096 | Sweep Latch |
| 27 | 1175 | ZINC PL. | 7858BB | #8 x 5/8" PH FH SMS |
| 28 | 4051A | 6063-T5 | 64051 | Sash Bottom Rail |
| 29 | 1226 | VINYL | 6TP249 | Wstp., Bulb Vinyl |
| 30 | 4008 | 6063-T5 | 612231 | Sash Side Rail |
| 31 | 1235 | FIN SEAL | 67S16G | Wstp.,.170 x .270 back, fin seal |
| 32 | 1155-1 | S. STL | 781PQX | #8 x 1" S.S. Quad Pn. SMS |
| 33 | 1085 | CELCON | 70344 | Sash Top Guide, 9/16" |
| 34 | 1086 | CELCON | 42505 | Sash Top Guide, 11/16" |
| 35 | 1268 | NYLON 6/6 | 42501 | Sash Face Guide |
| 36 | Glass 3/8 Laminated (1/8A,.090,3/16T) | | | |
| 37 | Glass 7/16 Laminated (3/16HS,.090,3/16HS) | | | |
| 38 | | Dow #899 or #995 | | Glazing Silicone |
| 39 | 4222 | 6063-T5 | 64222 | Glazing Bead 7/16 Lami |
| 40 | 985B | 6063-T5 | 6985 | Glazing Bead 7/16 Lami w/Grill Kit |
| 41 | 988 | 6063-T5 | 6988 | Glazing Bead 3/8 Lami |
| 42 | 987 | 6063-T5 | 6987 | Glazing Bead 3/8 Lami W/Grill Kit |
| 43 | 1224 | VINYL | TP-247 | Vinyl Bulb Weatherstrip "Thick" |
| 44 | 1622 | EPDM | 71622K | Glass Setting Block 3/32 x 25/64 x 1 |
| 45 | 1014 | 3105 H14 | 61011 | Screen Frame |
| 46 | 1630/1631 | POLYPROPYLENE | 71630/71631 | Screen Corner Key |
| 47 | 1073 | S. STL | 78835M | Screen Spring |
| 48 | | | 61816 | Screen Cloth |
| 49 | 1278 | ELASTOMETRIC PVC | 70409K | Screen Pull |
| 50 | 1624/1635 | ELASTOMETRIC PVC | 61624K/35K | Screen Spline |
| 51 | 2740A | 6063-T6 | 62740 | Bottom Lock "optional" |

| ITEM | DWG# | MAT'L | PGT# | DESCRIPTION |
|---|---|---|---|---|
| 52 | 1088 | 6063-T5 | 7SPRNG | Bottom Lock Spring |
| 53 | 4063A | 6061-T6 | 64063 | Meeting Rail Reinforcement |
| 54 | 947 | | 41722 | Grommet |
| 55 | | | 78X38PPT | #10 x 3/4"PH PH TEK Screw |
| 56 | | | 61062G | Wstp., .187 x .270 fin seal |
| 57 | 4064 | PLASTIC | 44064 | Mtg. Rail Tube End Cap |

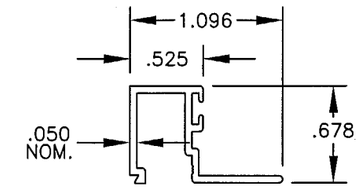


39 7/16 LAMI BEAD
MAT'L: 6063-T5
DWG# 4222

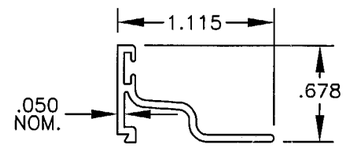


40 7/16 LAMI BEAD W/GRILL KIT
MAT'L: 6063-T5
DWG# 985

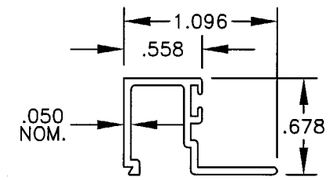


41 3/8 LAMI BEAD
MAT'L: 6063-T5
DWG# 988

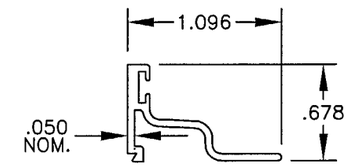


42 3/8 LAMI BEAD W/GRILL KIT
MAT'L: 6063-T5
DWG# 987

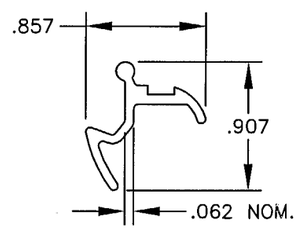


51 BOTTOM LOCK
MAT'L: 6063-T5
DWG# 2740

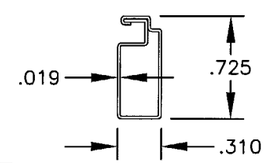


45 SCREEN FRAME
MAT'L: 3105-H14
DWG# 1014

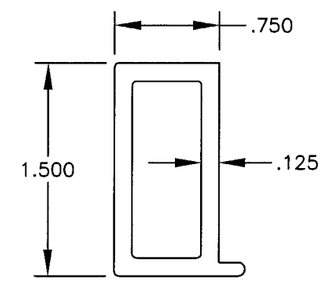


53 MEETING RAIL REINFORCEMENT
MAT'L: 6061-T6
DWG# 4063A

| Revsd By: | Date: | Revisions: |
|---|---|---|
| F.K. | 8/30/04 | D-NO CHG THIS SHT |
| F.K. | 2/02/04 | C-ADD DOW #995 & 157 |
| F.K. | 4/29/02 | NO CHG THIS SHT |
| F.K. | 2/27/02 | ADD DESCRIPT ITEM 38 |
| Drawn By: F.K. | 10/4/01 | REF: FTL-3179 & 4006 |

PRODUCT REVISED
as complying with the Florida Buiding Code
Acceptance No. 04-0809.03
Expiration Date JULY 3, 2007
By Miami Dade Product Control Division

10/29/04

Robert L. Clark, P.E.
PE #39712
Structural

PGT INDUSTRIES

1070 TECHNOLOGY DRIVE
NOKOMIS, FL 34275

P.O. BOX 1529
NOKOMIS, FL 34274

Description: B.O.M. & EXTRUSION PROFILES CONT.

Title: MULTI-STORY ALUM. SINGLE HUNG WINDOW

| Series/Model: | Scale: | Sheet: | Drawing No. | Rev: |
|---|---|---|---|---|
| SH-800 | NTS | 6 of 7 | 4061 | D |

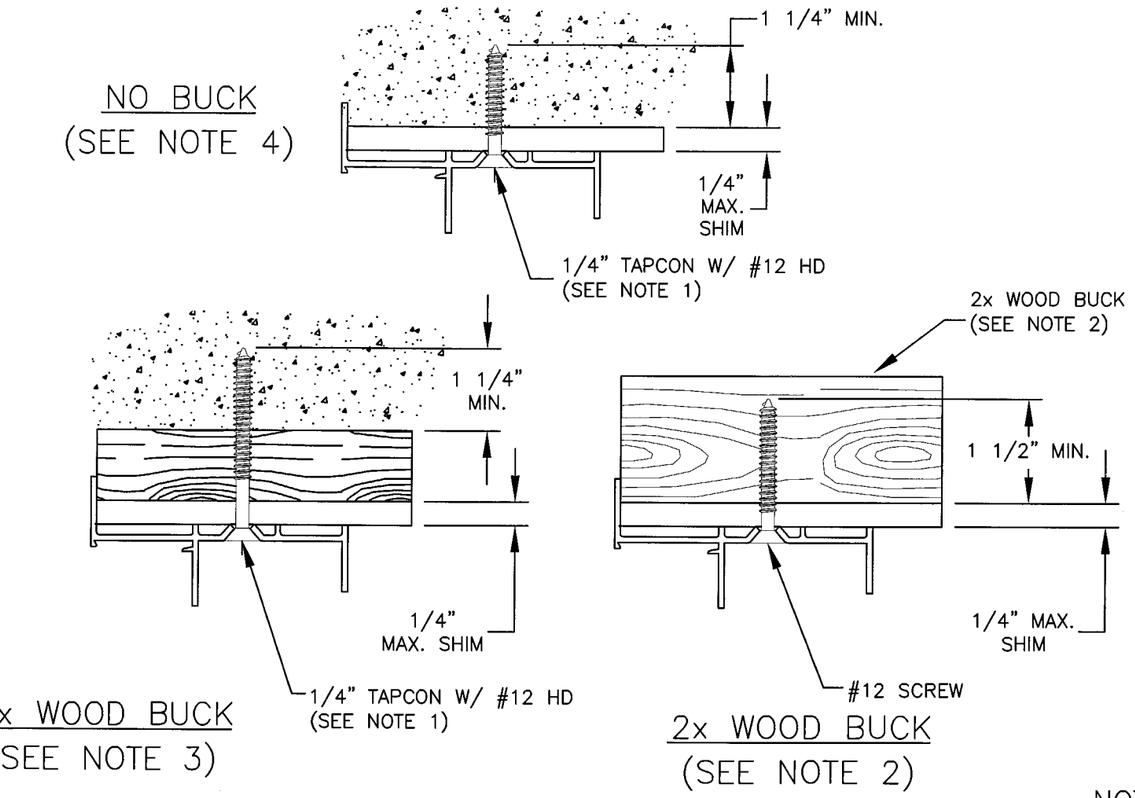


TYPICAL HEAD ANCHORAGE

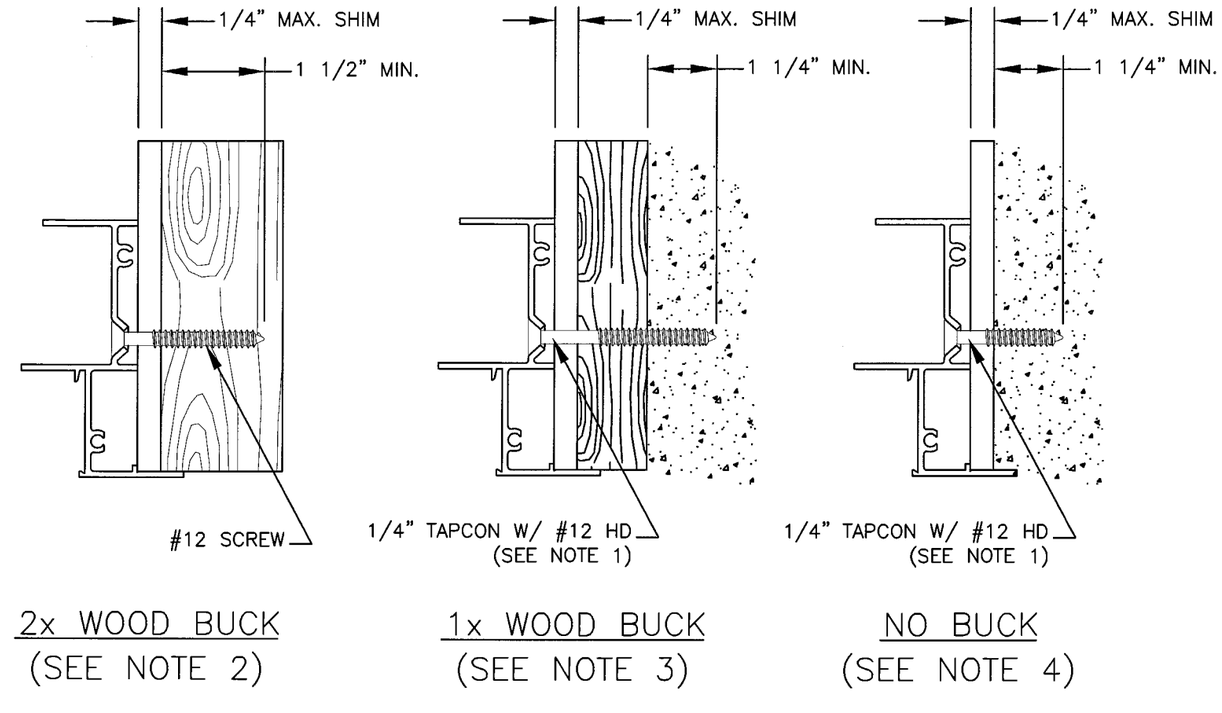


TYPICAL JAMB ANCHORAGE

NOTES:

1. FOR CONCRETE APPLICATIONS IN MIAMI–DADE COUNTY, USE ONLY MIAMI–DADE COUNTY APPROVED TAPCONS. (D)
2. INSTALLATION TO THE SUBSTRATE OF WOOD BUCKS 1 1/2" OR MORE THICK TO BE ENGINEERED BY OTHERS AND TO BE REVIEWED BY AUTHORITY HAVING JURISDICTION.
3. INSTALLATION TO THE SUBSTRATE OF WOOD BUCKS LESS THAN 1 1/2" THICK TO BE ENGINEERED BY OTHERS OR AS APPROVED BY AUTHORITY HAVING JURISDICTION.
4. WOOD BUCKS LESS THAN 1 1/2" THICK ARE OPTIONAL (PRODUCT MAY BE INSTALLED DIRECTLY TO CONCRETE).

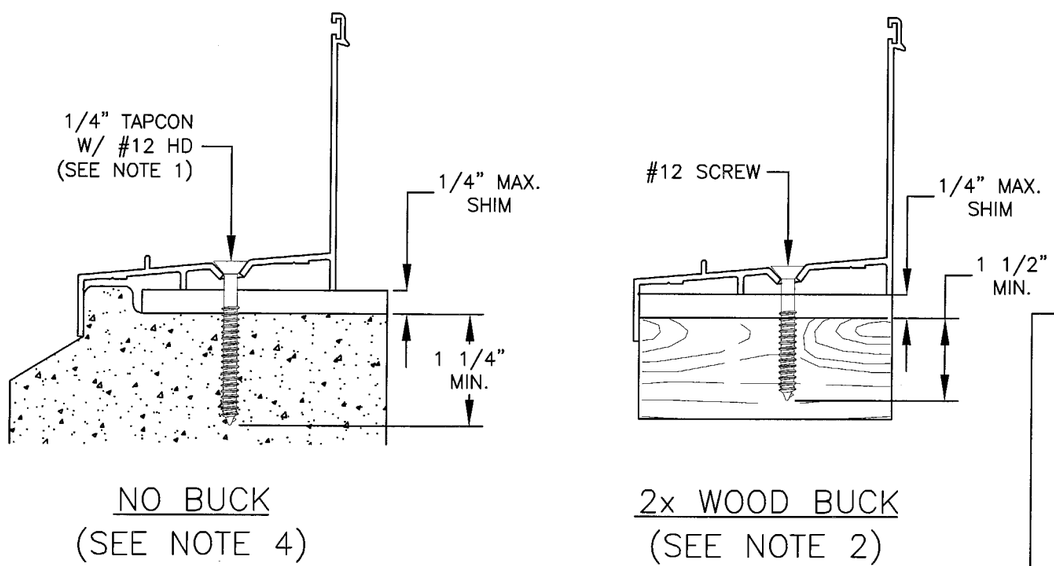


TYPICAL SILL ANCHORAGE

| Revsd By: | Date: | Revisions: |
|---|---|---|
| F.K. | 8/30/04 | D–REMOVE MFR NOTE 1 |
| F.K. | 2/02/04 | C–UPDATE |
| F.K. | 4/29/02 | CHG NOTE 1 |
| F.K. | 2/27/02 | RESCALE 2x BUCKS |
| Drawn By: F.K. | 10/4/01 | REF: FTL–3179 & 4006 |

PRODUCT REVISED
as complying with the Florida Building Code
Acceptance No. 04-0809.03
Expiration Date JULY 3, 2007
By Manuel Perez
Miami-Dade Product Control Division

Robert L. Clark, P.E.
PE #39712
Structural
10/29/04

PGT INDUSTRIES
1070 TECHNOLOGY DRIVE
NOKOMIS, FL 34275
P.O. BOX 1529
NOKOMIS, FL 34274

Description: ANCHORAGE DETAILS

Title: MULTI–STORY ALUM. SINGLE HUNG WINDOW

| Series/Model: | Scale: | Sheet: | Drawing No. | Rev: |
|---|---|---|---|---|
| SH–800 | NTS | 7 of 7 | 4061 | D |