MIAMI-DADE COUNTY
BUILDING CODE COMPLIANCE OFFICE (BCCO)
PRODUCT CONTROL DIVISION

MIAMI-DADE COUNTY, FLORIDA
METRO-DADE FLAGLER BUILDING
140 WEST FLAGLER STREET, SUITE 1603
MIAMI, FLORIDA 33130-1563
(305) 375-2901 FAX (305) 375-2908

NOTICE OF ACCEPTANCE (NOA)

Vistawall Architectural Products
803 Airport Road
Terrell, TX 75160

SCOPE:

This NOA is being issued under the applicable rules and regulations governing the use of construction materials. The documentation submitted has been reviewed by Miami-Dade County Product Control Division and accepted by the Board of Rules and Appeals (BORA) to be used in Miami Dade County and other areas where allowed by the Authority Having Jurisdiction (AHJ).

This NOA shall not be valid after the expiration date stated below. The Miami-Dade County Product Control Division (In Miami Dade County) and/or the AHJ (in areas other than Miami Dade County) reserve the right to have this product or material tested for quality assurance purposes. If this product or material fails to perform in the accepted manner, the manufacturer will incur the expense of such testing and the AHJ may immediately revoke, modify, or suspend the use of such product or material within their jurisdiction. BORA reserves the right to revoke this acceptance, if it is determined by Miami-Dade County Product Control Division that this product or material fails to meet the requirements of the applicable building code.

This product is approved as described herein, and has been designed to comply with the Florida Building Code, including the High Velocity Hurricane Zone.

DESCRIPTION: Series "RW-5000" Aluminum Fixed Window – Small Missile

APPROVAL DOCUMENT: Drawing No. **RW5000S,** titled "RW-5000 Impact Ribbon Window System – Small Missile Impact", sheets 1 through 6 of 6, dated 8/09/04, prepared by manufacturer, signed and sealed by Lewis A. Waldrop, P.E., bearing the Miami-Dade County Product Control Revision stamp with the Notice of Acceptance number and expiration date by the Miami-Dade County Product Control Division.

MISSILE IMPACT RATING: Small Missile Impact Resistant

LABELING: Each unit shall bear a permanent label with the manufacturer's name or logo, city, state and following statement: "Miami-Dade County Product Control Approved", unless otherwise noted herein.

RENEWAL of this NOA shall be considered after a renewal application has been filed and there has been no change in the applicable building code negatively affecting the performance of this product.

TERMINATION of this NOA will occur after the expiration date or if there has been a revision or change in the materials, use, and/or manufacture of the product or process. Misuse of this NOA as an endorsement of any product, for sales, advertising or any other purposes shall automatically terminate this NOA. Failure to comply with any section of this NOA shall be cause for termination and removal of NOA.

ADVERTISEMENT: The NOA number preceded by the words Miami-Dade County, Florida, and followed by the expiration date may be displayed in advertising literature. If any portion of the NOA is displayed, then it shall be done in its entirety.

INSPECTION: A copy of this entire NOA shall be provided to the user by the manufacturer or its distributors and shall be available for inspection at the job site at the request of the Building Official.

This NOA **revises NOA # 02-1202.01** and consists of this page 1 and evidence pages E-1, E-2, and E-3, as well as approval document mentioned above

The submitted documentation was reviewed by **Manuel Perez, P.E.**

PRODUCT CONTROL ACCEPTED

Vistawall Architectural Products

NOTICE OF ACCEPTANCE: EVIDENCE SUBMITTED

A. DRAWINGS

1. Manufacturer's die drawings and sections.
2. Drawing No. **RW5000S,** titled "RW-5000 Impact Ribbon Window System - Small Missile Impact", sheets 1 through 6 of 6, dated 8/09/04, prepared by manufacturer, signed and sealed by Lewis A. Waldrop, P.E.

B. TESTS

1. Test reports on 1) Uniform Static Air Pressure Test, Loading per FBC, TAS 202-94
   2) Large Missile Impact Test per FBC, TAS 201-94
   3) Cyclic Wind Pressure Loading per FBC, TAS 203-94
   along with marked-up drawings and installation diagram of an aluminum fixed window (specimen 4), prepared by Hurricane Test Laboratory, Inc., Test Report No. **HTL-0105-0210-04**, dated 2/9/04, signed and sealed by Vinu J. Abraham, P.E. ***"Submitted under NOA # 04-0601.01"***
2. Test reports on 1) Large Missile Impact Test per FBC, TAS 201-94
   2) Cyclic Wind Pressure Loading per FBC, TAS 203-94
   along with marked-up drawings and installation diagram of an aluminum fixed window (specimen 1), prepared by Hurricane Test Laboratory, Inc., Test Report No. **HTL-0105-0117-02**, dated 1/23/02, signed and sealed by Vinu J. Abraham, P.E. ***"Submitted under NOA # 02-1202.01"***
3. Test reports on 1) Large Missile Impact Test per FBC, TAS 201-94
   2) Cyclic Wind Pressure Loading per FBC, TAS 203-94
   along with marked-up drawings and installation diagram of an aluminum fixed window (specimen 1), prepared by Hurricane Test Laboratory, Inc., Test Report No. **HTL-0105-0403-02**, dated 4/1/02, signed and sealed by Vinu J. Abraham, P.E. ***"Submitted under NOA # 02-1202.01"***
4. Test reports on 1) Air Infiltration Test, per FBC, TAS 202-94
   2) Uniform Static Air Pressure Test, Loading per FBC,TAS 202-94
   3) Water Resistance Test, per FBC, TAS 202-94
   4) Large Missile Impact Test per FBC, TAS 201-94
   5) Cyclic Wind Pressure Loading per FBC, TAS 203-94
   along with marked-up drawings and installation diagram of an aluminum fixed window (specimen 4), prepared by Hurricane Test Laboratory, Inc., Test Report No. **HTL-0105-0403-02**, dated 4/3/02, signed and sealed by Vinu J. Abraham, P.E. ***"Submitted under NOA # 02-1202.01"***

Manuel Perez

Manuel Perez, P.E.
Product Control Examiner
NOA No 04-0907.01
Expiration Date: February 27, 2008
Approval Date: January 06, 2005

5. Test reports on 1) Air Infiltration Test, per FBC, TAS 202-94
   2) Uniform Static Air Pressure Test, Loading per FBC, TAS 202-94
   3) Water Resistance Test, per FBC, TAS 202-94
   4) Large Missile Impact Test per FBC, TAS 201-94
   5) Cyclic Wind Pressure Loading per FBC, TAS 203-94

   along with marked-up drawings and installation diagram of an aluminum fixed window (specimen 2), prepared by Hurricane Test Laboratory, Inc., Test Report No. **HTL-0105-0403-02**, dated 4/11/02, signed and sealed by Vinu J. Abraham
   "Submitted under NOA # 02-1202.01"
6. Test reports on 1) Uniform Static Air Pressure Test, Loading per FBC, TAS 202-94
   2) Small Missile Impact Test per FBC, TAS 201-94
   3) Cyclic Wind Pressure Loading per FBC, TAS 203-94

   along with marked-up drawings and installation diagram of an aluminum fixed window (specimen 5), prepared by Hurricane Test Laboratory, Inc., Test Report No. **HTL-0105-0403-02**, dated 4/5/02, signed and sealed by Vinu J. Abraham, P.E.
   "Submitted under NOA # 02-1202.01"
7. Test reports on 1) Uniform Static Air Pressure Test, Loading per FBC, TAS 202-94
   2) Water Resistance Test, per FBC, TAS 202-94
   3) Large Missile Impact Test per FBC, TAS 201-94
   4) Cyclic Wind Pressure Loading per FBC, TAS 203-94

   along with marked-up drawings and installation diagram of an aluminum fixed window (specimen 1), prepared by Hurricane Test Laboratory, Inc., Test Report No. **HTL-0105-0525-02**, dated 5/24/02, signed and sealed by Vinu J. Abraham, P.E.
   "Submitted under NOA # 02-1202.01"

C. CALCULATIONS

1. Anchor Calculations and structural analysis, prepared by Lewis A. Waldrop, P.E., dated 10/23/02, signed and sealed by Lewis A. Waldrop, P.E.
   "Submitted under NOA # 02-1202.01"

D. QUALITY ASSURANCE

1. Miami Dade Building Code Compliance Office (BCCO).

Manuel Perez, P.E.
Product Control Examiner
NOA No 04-0907.01
Expiration Date: February 27, 2008
Approval Date: January 06, 2005

NOTICE OF ACCEPTANCE: EVIDENCE SUBMITTED

E. MATERIAL CERTIFICATIONS

1. Notice of Acceptance No. **98-0728.05** issued to Solutia, Inc. for "Saflex IIIG PVB Polyvinyl butryal interlayer" dated 8/27/98, expiring on 5/21/01.

F. STATEMENTS

1. Statement letter of conformance, dated August 11, signed by Lewis A. Waldrop, P.E.
2. Statement letter of no financial interest, dated August 11, 2004, signed and sealed by Lewis A. Waldrop, P.E.
3. Laboratory compliance letter for Test Report no. **HTL-0105-0210-04,** issued by National Certified Testing Laboratories, dated 3/11/04, signed and sealed by Vinu J. Abraham, P.E.
4. Laboratory compliance letter for Test Report no. **HTL-0105-0403-02, HTL-0105-0525-02, & HTL-0105-0117-02,** issued by National Certified Testing Laboratories, dated 9/27/02, signed and sealed by Vinu J. Abraham, P.E.
   "Submitted under NOA # 02-1202.01"

G. OTHER

1. Notice of Acceptance No. **02-1202.01**, issued to Vistawall Architectural Products for their Series "RW_5000" Aluminum Fixed Window, approved on 02/27/03 and expiring on 02/27/08.

Manuel Perez, P.E.
Product Control Examiner
NOA No 04-0907.01
Expiration Date: February 27, 2008
Approval Date: January 06, 2005

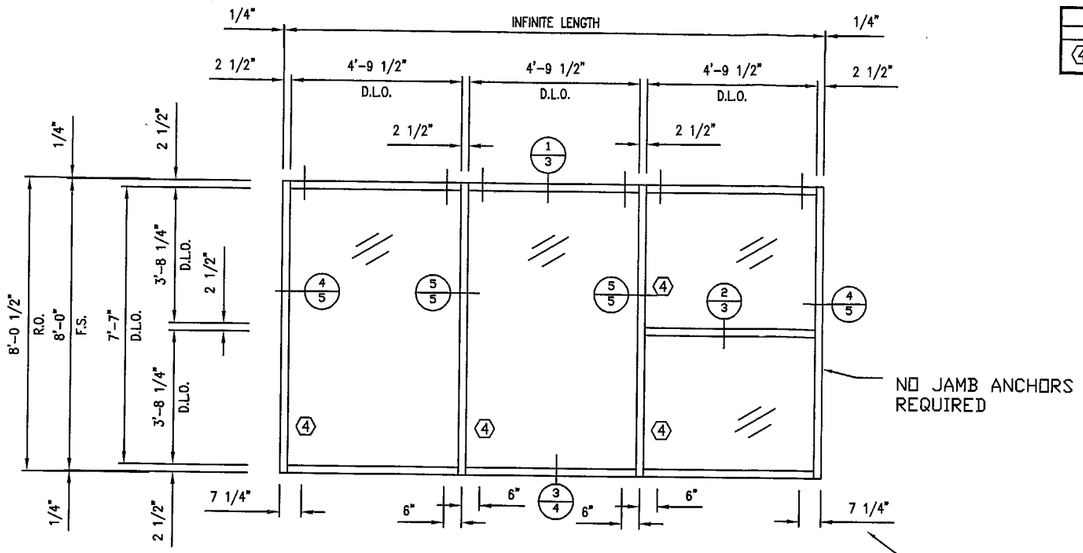

SMALL IMPACT ④

EXTERIOR ELEVATION

DESIGN PRESSURE	
70 psf (15psf WATER)	POSITIVE
80 psf	NEGATIVE

GLASS SCHEDULE			
	MANUFACTURER	DESCRIPTION	GASKETS
④	SOLUTIA SAFLEX PVB	1/4" H.S. GLASS AT INNER AND OUTER FACES, .060 SAFLEX PVB; TOTAL = .496	FG-5126 INT FG-5125 EXT

NOTES:
SYSTEM DESIGNED AND TESTED IN COMPLIANCE WITH 2001 FLORIDA BUILDING CODE.
(TAS-201, TAS-202 & TAS-203)

Lewis A. Waldrop, P.E.
P. O. Box 620
Alto, GA 30510
706-778-3784

Lewis A. Waldrop, P.E.
FLA. P.E. #21959
8/12/04

PRODUCT REVISED
as complying with the Florida Building Code
Acceptance No. 04-0907.01
Expiration Date FEB. 27, 2008
By Miami Dade Product Control Division

NO.	REVISION	DATE	BY

VISTAWALL ARCHITECTURAL PRODUCTS
PRODUCT DEVELOPMENT GROUP

RW-5000 IMPACT

RIBBON WINDOW SYSTEM - SMALL MISSILE IMPACT

DATE 8/09/04
DRAWN BY WJL
DWG. NO. RW5000S

SHEET 1 OF 6

RW-5000 IMPACT ACCESORIES

FASTENER SCHEDULE		
PART NO.	DESCRIPTION	APPLICATION
FS-327	#12 X 7/8" HWHTCS	GLAZING BEADS
FS-202	#8 X 1/2" PPH	JAMB CAP
FS-45	#8 X 1/2" PFH	MULL CAP/END DAM
FS-44	5/16" X 1" HHSTS	FRAME CONNECTIONS
	3/8" X 2 1/4" GRD 5 HH BOLT	ANCHOR TO STEEL
FSW-80	3/8" FLATWASHER	ANCHOR TO STEEL
FSN-81	3/8" HEX NUT	ANCHOR TO STEEL
FSW-118	3/8" LOCKWASHER	ANCHOR TO STEEL
KB II 38-334	3/8" X 3 3/4" HILTI KWIK BOLT II	ANCHOR TO CONCRETE

COMPONENT SCHEDULE	
EXTRUSION NO.	DESCRIPTION
RW-5131	MULL
RW-5132	MULL
RW-5133	HEAD
RW-5134	GLAZING BEAD
RW-5135	HORIZONTAL TRIM
RW-5136	JAMB
RW-5137	HORIZONTAL
RW-5138	SILL
RW-5139	SETTING CHAIR
RW-5140	SILL FILLER
RW-5141	MULL CAP
RW-5142	JAMB CAP
RW-5161	END DAM
RW-5162	MULL CLIP

GASKETS AND HARDWARE			
PART NO	DESCRIPTION	MANUFACTURER	LOCATION
CW-998	BULB GASKET	VISTAWALL	MULLIONS
FG-5125	EPDM GASKET	VISTAWALL	TYPICAL EXTERIOR
FG-5126	VINYL SPACER	VISTAWALL	TYPICAL INTERIOR
FG-5124	EPDM SETTING BLOCK	VISTAWALL	SILL & HORIZONTAL
RW5000-FP-3	VINYL WATER DIVERTER	VISTAWALL	HORIZONTALS
RW-5139	ALUM. SETTING CHAIR X 4" LG.	VISTAWALL	SILL
FG-5128	VINYL BAFFLE RETAINER	VISTAWALL	SILL
RW5000-PP-4	BAFFLE	VISTAWALL	SILL
RW5000-FP-1	MULL CAP (MADE FROM RW-5141)	VISTAWALL	HEAD & SILL OF MULLIONS
RW5000-FP-2	JAMB CAP (MADE FROM RW-5142)	VISTAWALL	HEAD & SILL OF JAMBS
RW5000-FP-8	END DAM (MADE FROM RW-5161)	VISTAWALL	HEAD & SILL OF MULLIONS
RW5000-FP-11	MULLION CLIP (MADE FROM RW-5162)	VISTAWALL	MULLION
DOW 995	STRUCTURAL SILICONE	DOW-CORNING	INTERIOR GLASS
SM-5601	SEALANT TAPE	SCHNEE-MOREHEAD	FRAME JOINTS
SM-7100	SEALANT	SCHNEE-MOREHEAD	PERIMETER SEAL
931	SEALANT	VULKEM	MULL JOINT

NOTE:
STRUCTURAL ALUMINUM TO BE 6063-T6,
TRIM TO BE 6063-T5

Lewis A. Waldrop, P.E.
P. O. Box 620
Alto, GA 30510
706-778-3784

Lewis A. Waldrop, P.E.
FLA. P.E. #21959

8/12/04

PRODUCT REVISED
as complying with the Florida
Buiding Code
Acceptance No 04-0907.01
Expiration Date FEB.27,2008
By Manuel Perez
Miami Dade Product Control
Division

NO.	REVISION	DATE	BY

VISTAWALL ARCHITECTURAL PRODUCTS
PRODUCT DEVELOPMENT GROUP

RW-5000 IMPACT
RIBBON WINDOW SYSTEM - SMALL MISSILE IMPACT

DATE: 8/09/04
DRAWN BY WJL
DWG. NO. RW5000S

SHEET 2 OF 6

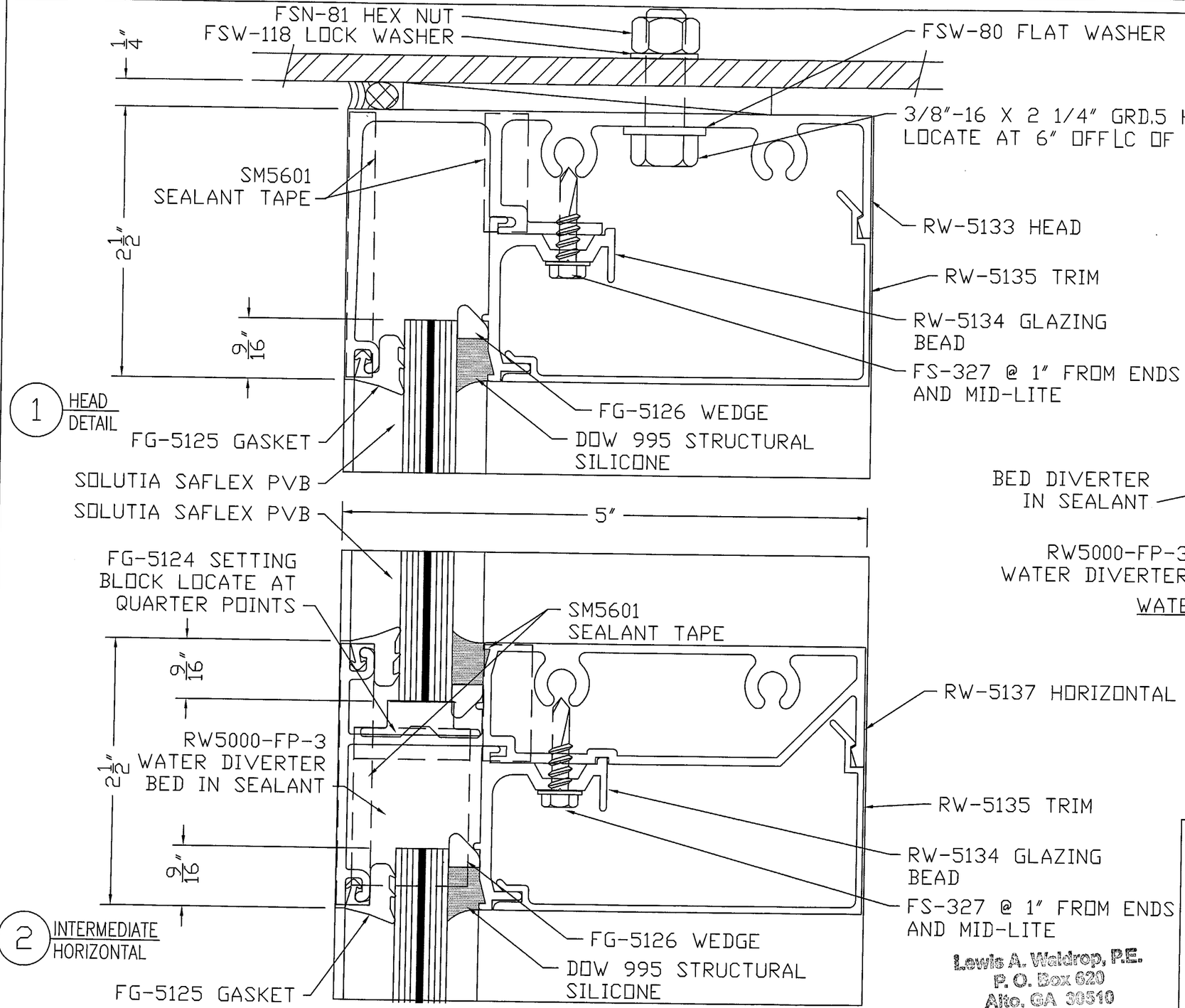

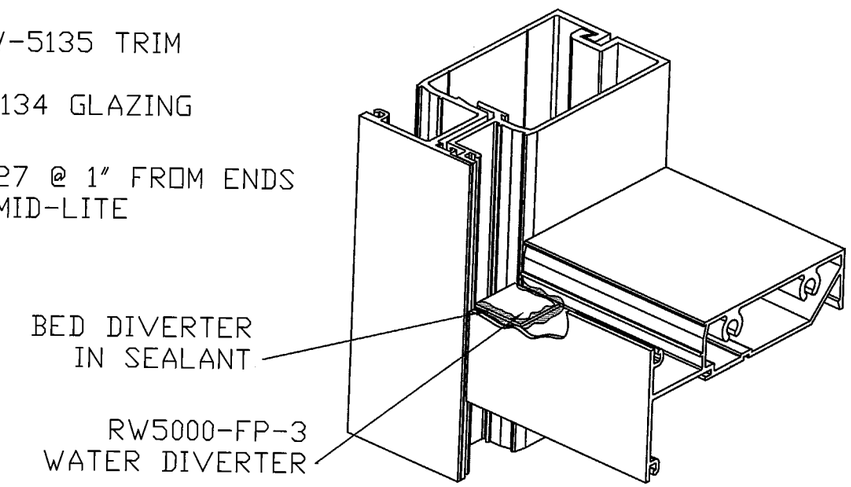

WATER DIVERTER SEALANT DETAIL

LOCATE AT EACH END OF INTERMEDIATE HORIZONTALS

GLAZING NOTE:
REFERENCE SHEET 1 FOR GLASS SCHEDULE,AND SHEET 4 FOR GASKET AND GLAZING OPTIONS.
REFERENCE SHEET 6 FOR DIVERTER INSTALLATION.

Lewis A. Waldrop, P.E.
P. O. Box 620
Alto, GA 30510
706-778-3784

Lewis A. Waldrop, P.E.
FLA. P.E. #21959

8/12/04

PRODUCT REVISED
as complying with the Florida Buiding Code
Acceptance No. 04-0907.01
Expiration Date FEB. 27, 2008
By Miami-Dade Product Control Division

NO.	REVISION	DATE	BY

VISTAWALL ARCHITECTURAL PRODUCTS
PRODUCT DEVELOPMENT GROUP

RW-5000 IMPACT

RIBBON WINDOW SYSTEM - SMALL MISSILE IMPACT

DATE: 8/09/04
DRAWN BY WJL
DWG. NO. RW5000S

SHEET 3 OF 6

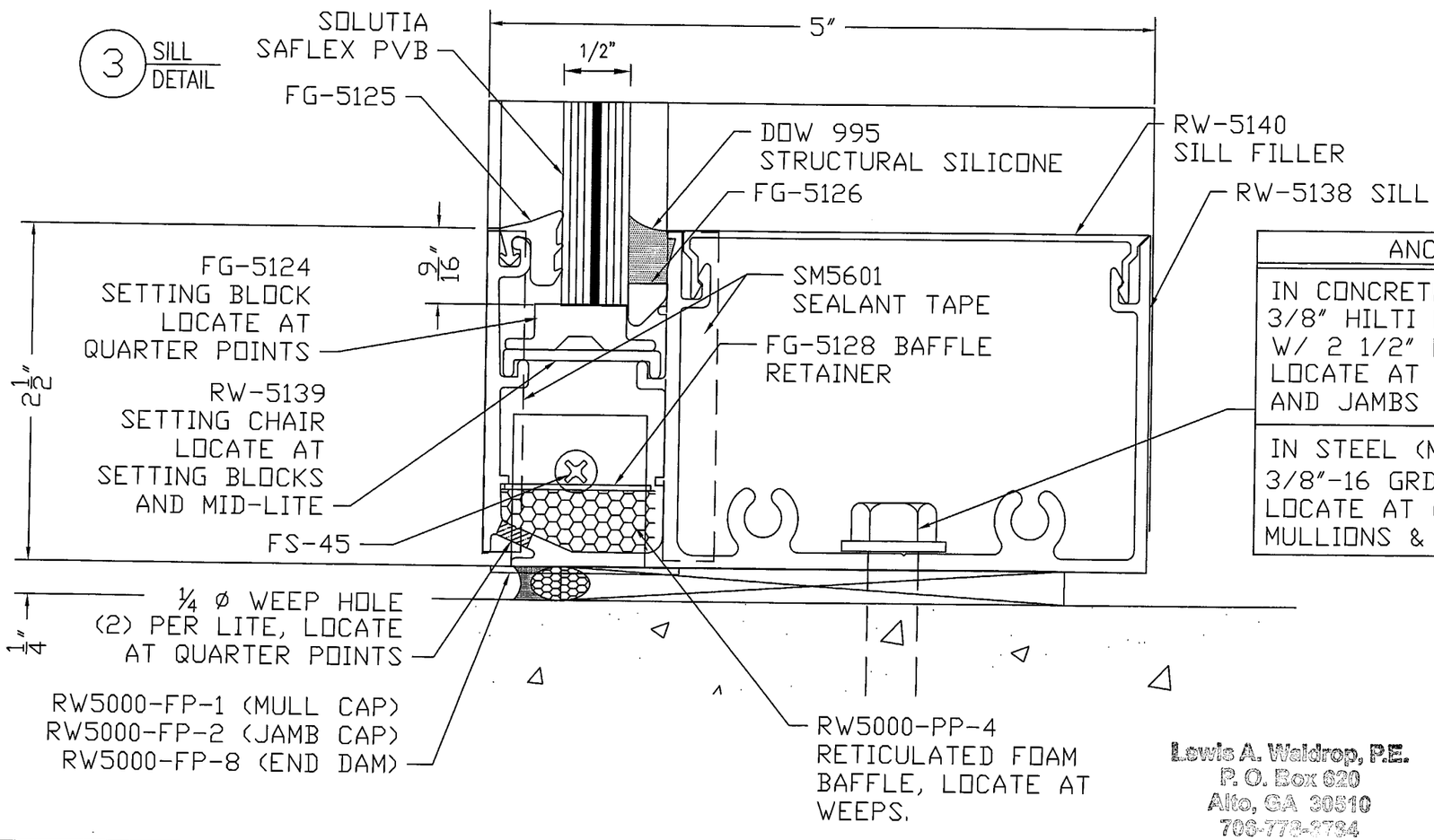

ANCHOR SCHEDULE
IN CONCRETE (2000 psi): 3/8" HILTI KWIKBOLT II (KBII 38-334) W/ 2 1/2" MIN. EMBEDMENT LOCATE AT 6" OFF ℄ OF MULLIONS AND JAMBS
IN STEEL (MINIMUM 14 ga. STUD): 3/8"-16 GRD.5 HH BOLT LOCATE AT 6" OFF ℄ OF MULLIONS & JAMB

Lewis A. Waldrop, P.E.
P. O. Box 620
Alto, GA 30510
706-778-2784

Lewis A. Waldrop, P.E.
FLA. P.E. #21959

8/12/04

PRODUCT REVISED
as complying with the Florida
Building Code
Acceptance No. 04-0907.01
Expiration Date FEB. 27, 2008
By Miami-Dade Product Control
Division

NO.	REVISION	DATE	BY

VISTAWALL
ARCHITECTURAL PRODUCTS
PRODUCT DEVELOPMENT GROUP

RW-5000 IMPACT

RIBBON WINDOW SYSTEM - SMALL MISSILE IMPACT

DATE: 8/09/04
DRAWN BY WJL
DWG. NO. RW5000S

SHEET 4 OF 6

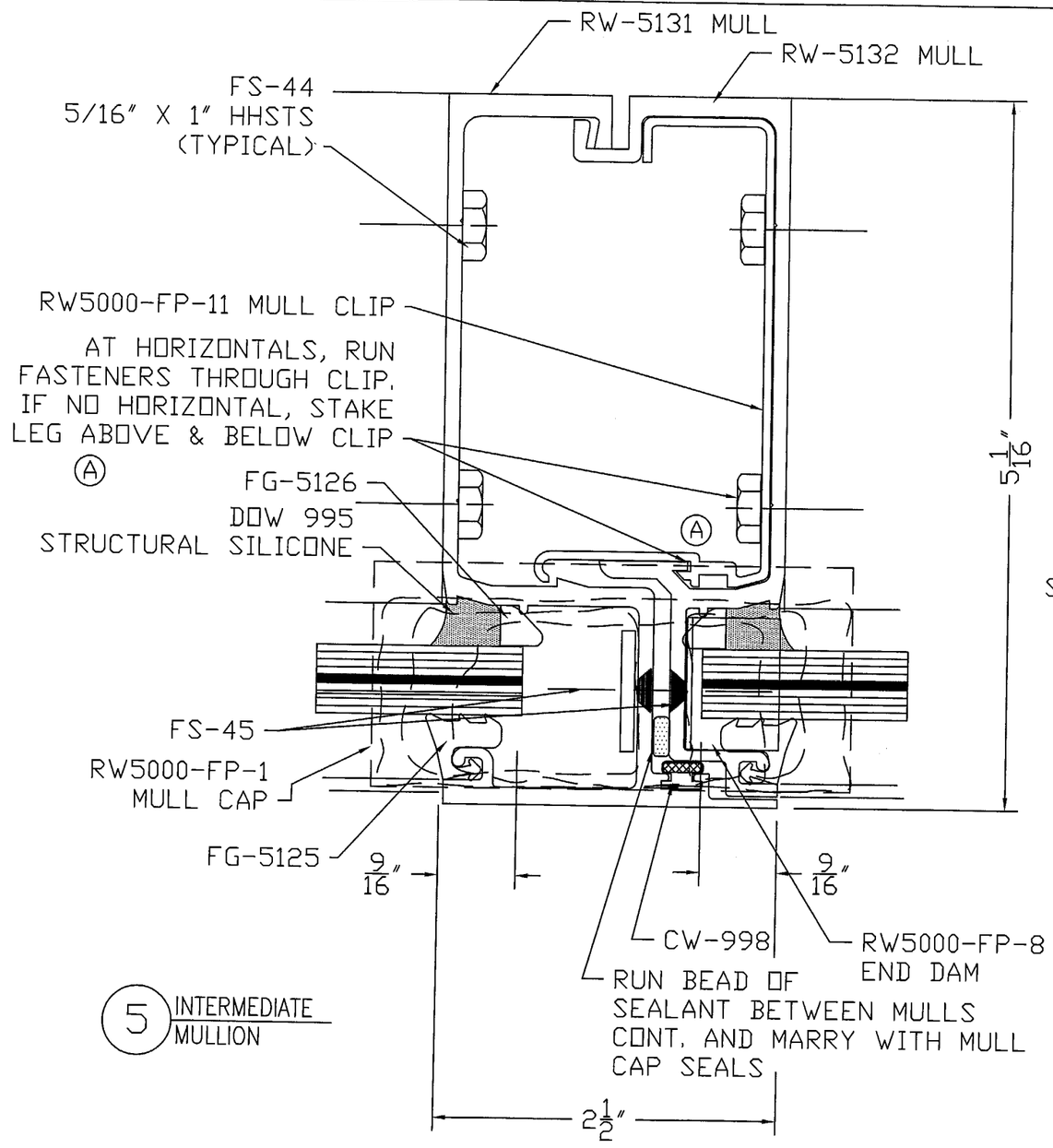

5 INTERMEDIATE MULLION

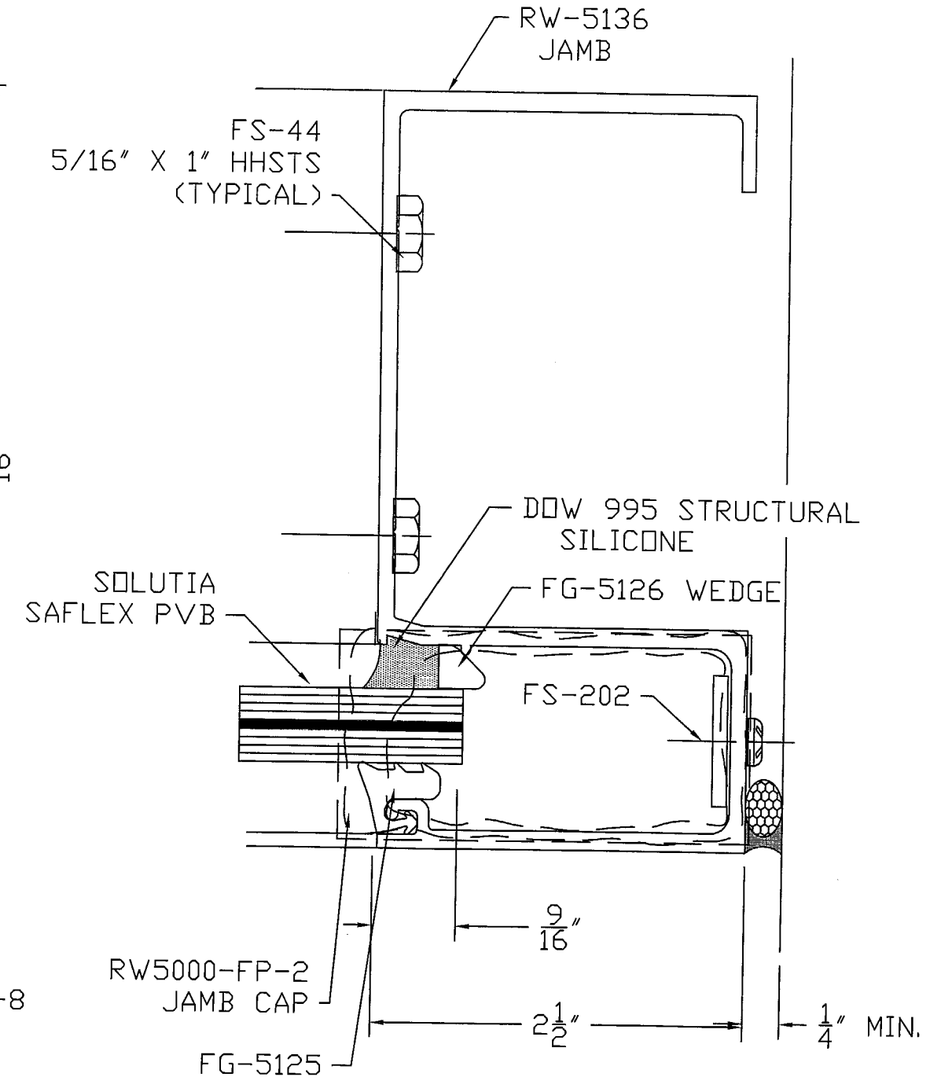

4 JAMB MULLION

GLAZING NOTE:
REFERENCE SHEET 1 FOR GLASS SCHEDULE,AND SHEET 4 FOR GASKET AND GLAZING OPTIONS.

SEE SHEET 6 FOR ADDITIONAL MULL CAP INSTALLATION INFORMATION

Lewis A. Waldrop, P.E.
P. O. Box 620
Alto, GA 30510
706-778-3784

Lewis A. Waldrop, P.E.
FLA. P.E. #21959
8/12/04

PRODUCT REVISED
as complying with the Florida Building Code
Acceptance No 04-0907.01
Expiration Date FEB. 27, 2008
By Miami-Dade Product Control Division

NO.	REVISION	DATE	BY

VISTAWALL ARCHITECTURAL PRODUCTS
PRODUCT DEVELOPMENT GROUP

RW-5000 IMPACT

RIBBON WINDOW SYSTEM - SMALL MISSILE IMPACT

DATE: 8/09/04
DRAWN BY WJL
DWG. NO. RW5000S

SHEET 5 OF 6

MULL CAP SEALANT DETAIL AND INSTALLATION INSTRUCTIONS

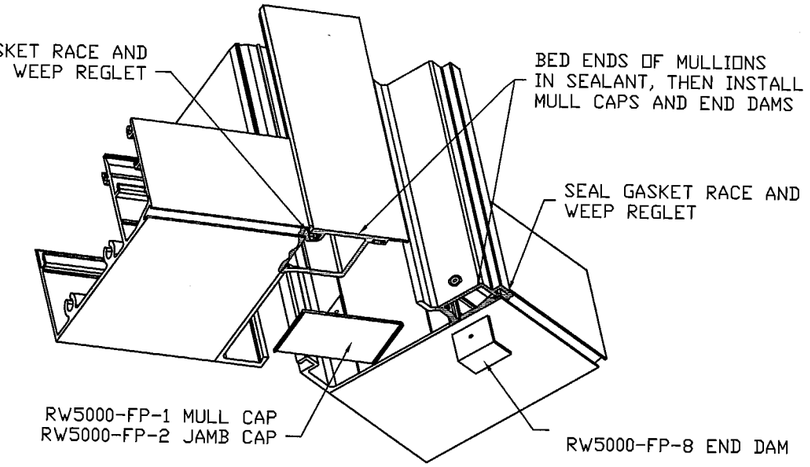

INSTALL MULL CAPS AND END DAMS USING FS-45 (#8 X 1/2" PFH), INSTALL JAMB CAPS USING FS-202 (#8 X 1/2" PPH). (CAP SEAL ALL FASTENERS)

DETAIL A

MULL CAP AND END DAM REQUIRED AT HEAD AND SILL TYPICAL. (SILL SHOWN)

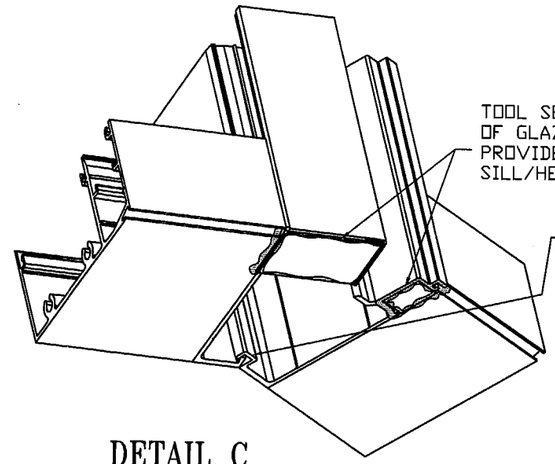

DETAIL C

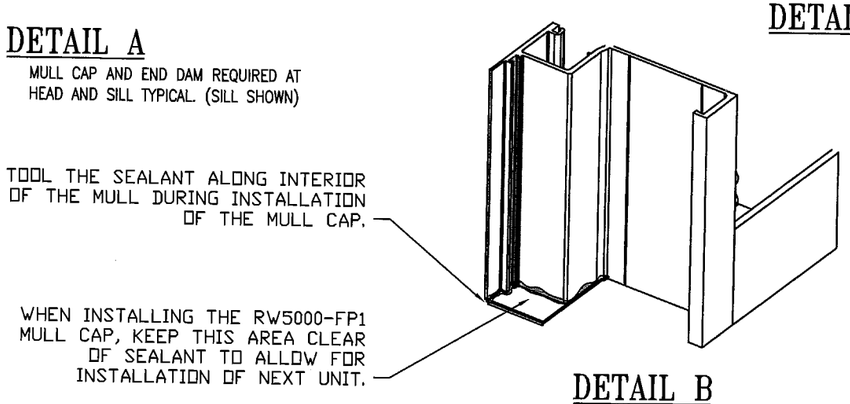

DETAIL B

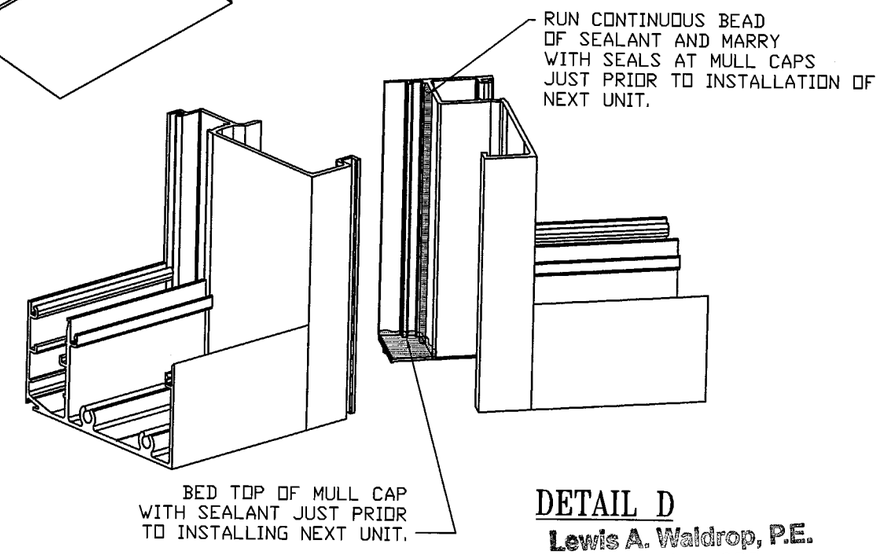

DETAIL D

Lewis A. Waldrop, P.E.
P. O. Box 620
Alto, GA 30510
706-778-3784

INSTALLATION NOTES:

1) ASSEMBLE UNITS AS SHOWN ON DETAIL SHEETS 3 THRU 5. INSTALL SEALANT TAPE BETWEEN VERTICALS AND HORIZONTALS AS SHOWN.
2) INSTALL AND SEAL MULL CAPS AS SHOWN IN DETAILS A, B & C ABOVE.
3) MULL CAPS SHOULD FORM A WATER TIGHT SEAL. A TEST MAY BE CONDUCTED TO CONFIRM THIS SEAL BY BLOCKING WEEP HOLES AND FILLING SILL CAVITY WITH WATER. AFTER TEST REMOVE PLUGS FROM WEEP HOLES, DRAIN WATER, INSTALL BAFFLES AND BAFFLE RETAINERS.
4) INSTALL FIRST UNIT INTO OPENING
(UNITS WILL INSTALL FROM LEFT TO RIGHT AS VIEWED FROM EXTERIOR OF BUILDING), LEVEL, PLUMB AND ANCHOR FIRST UNIT. WHEN SHIMMING UNITS, SHIM AT ANCHOR POINTS UNDER SILL. DO NOT PLACE SHIMS BENEATH MULL OR MULL CAP.
5) RUN BEAD OF SEALANT CONTINUOUS FOR FULL HEIGHT OF MULLION AND BED MULL CAP WITH SEALANT AT HEAD AND SILL AS SHOWN IN DETAIL D.
6) INSTALL SECOND UNIT BY BRINGING INTO POSITION FROM INSIDE OF BUILDING, TILT HEAD OF UNIT BENEATH MULL CAP, ROTATE SILL OF UNIT OVER LOWER MULL CAP, THEN INTERLOCK BACK LEGS OF MULLION (SEE DETAIL C), PLACE APPROPRIATE SHIMS BENEATH SILL MEMBER TO ALLOW FOR BETTER ALIGNMENT, AND ROTATE UNIT INTO PLACE. PLUMB AND ANCHOR.
7) REPEAT STEP 6 FOR ALL ADDITIONAL UNITS. MINIMUM 1/4" CAULK JOINT AT JAMB IS REQUIRED FOR INSTALLATION OF FINAL UNIT.
8) SYSTEM MAY BE INSTALLED EITHER IN UN-GLAZED OR PREGLAZED FRAMES. WHEN INSTALLING UNITS AS UN-GLAZED FRAMES FOLLOW INSTRUCTIONS 4 THRU 8 AND THEN INSTALL GLASS, NEXT PLACE AN 1/8" SHIM AT MID-HEIGHT OF MULL AND CLAMP BACK OF MULL AT THE SHIM BEFORE RUNNING WEDGE TO HELP INSURE PROPER ALIGNMENT OF MULLS AT FACE OF SYSTEM. WHEN PREGLAZING FRAMES, MAKE SURE THAT UNITS ARE SQUARE AND THAT DAY LIGHT OPENINGS ARE HELD TO PROPER DIMENSIONS BEFORE RUNNING STRUCTURAL SILICONE. (REFERENCE SILICONE MANUFACTURER FOR PROPER CLEANING AND USE OF SILICONE.)

Lewis A. Waldrop, P.E.
FLA. P.E. #21959

Lew Waldrop
8/12/04

PRODUCT REVISED
as complying with the Florida Building Code
Acceptance No. 04-0907.01
Expiration Date FEB. 27, 2008
By Manuel Perez
Miami Dade Product Control Division

NO.	REVISION	DATE	BY

VISTAWALL ARCHITECTURAL PRODUCTS
PRODUCT DEVELOPMENT GROUP

RW-5000 IMPACT
RIBBON WINDOW SYSTEM - SMALL MISSILE IMPACT

DATE: 8/09/04
DRAWN BY WJL
DWG. NO. RW5000S

SHEET 6 OF 6