MIAMI-DADE

BUILDING CODE COMPLIANCE OFFICE (BCCO)
PRODUCT CONTROL DIVISION

MIAMI-DADE COUNTY, FLORIDA
METRO-DADE FLAGLER BUILDING
140 WEST FLAGLER STREET, SUITE 1603
MIAMI, FLORIDA 33130-1563
(305) 375-2901 FAX (305) 375-2908

NOTICE OF ACCEPTANCE (NOA)

Pella Corporation
102 Main Street
Pella, IA 50219

SCOPE:

This NOA is being issued under the applicable rules and regulations governing the use of construction materials. The documentation submitted has been reviewed by Miami-Dade County Product Control Division and accepted by the Board of Rules and Appeals (BORA) to be used in Miami Dade County and other areas where allowed by the Authority Having Jurisdiction (AHJ).

This NOA shall not be valid after the expiration date stated below. The Miami-Dade County Product Control Division (In Miami Dade County) and/or the AHJ (in areas other than Miami Dade County) reserve the right to have this product or material tested for quality assurance purposes. If this product or material fails to perform in the accepted manner, the manufacturer will incur the expense of such testing and the AHJ may immediately revoke, modify, or suspend the use of such product or material within their jurisdiction. BORA reserves the right to revoke this acceptance, if it is determined by Miami-Dade County Product Control Division that this product or material fails to meet the requirements of the applicable building code.

This product is approved as described herein, and has been designed to comply with the Florida Building Code, including the High Velocity Hurricane Zone.

DESCRIPTION: Aluminum Clad Wood Vent Casement Windows

APPROVAL DOCUMENT: Drawing No.**1316**, titled "Architect Series Aluminum Clad Wood Impact Casement Window", sheets 1 through 2 of 2, prepared by W.W. Schaefer Engineering& Consultant, P.A., dated 07/20/04, signed and sealed by Warren W. Schaffer, P.E., bearing the Miami-Dade County Product Control Approval stamp with the Notice of Acceptance number and approval date by the Miami-Dade County Product Control Division.

MISSILE IMPACT RATING: Large and Small Missile Impact

LABELING: Each unit shall bear a permanent label with the manufacturer's name or logo, city, state and following statement: "Miami-Dade County Product Control Approved", unless otherwise noted herein.

RENEWAL of this NOA shall be considered after a renewal application has been filed and there has been no change in the applicable building code negatively affecting the performance of this product.

TERMINATION of this NOA will occur after the expiration date or if there has been a revision or change in the materials, use, and/or manufacture of the product or process. Misuse of this NOA as an endorsement of any product, for sales, advertising or any other purposes shall automatically terminate this NOA. Failure to comply with any section of this NOA shall be cause for termination and removal of NOA.

ADVERTISEMENT: The NOA number preceded by the words Miami-Dade County, Florida, and followed by the expiration date may be displayed in advertising literature. If any portion of the NOA is displayed, then it shall be done in its entirety.

INSPECTION: A copy of this entire NOA shall be provided to the user by the manufacturer or its distributors and shall be available for inspection at the job site at the request of the Building Official.
This NOA consists of this page 1 and evidence page E-1, as well as approval document mentioned above.
The submitted documentation was reviewed by **Herminio F. Gonzalez, P.E., Director, BCCO**

10/14/04

PRODUCT CONTROL ACCEPTED

Pella Corporation

NOTICE OF ACCEPTANCE: EVIDENCE SUBMITTED

A. DRAWINGS

1. Manufacturer's die drawings and sections.
2. Drawing No.**1316**, titled "Architect Series Aluminum Clad Wood Impact Casement Window", sheets 1 through 2 of 2, prepared by W.W. Schaefer Engineering& Consultant, P.A., dated 07/20/04, signed and sealed by Warren W. Schaffer, P.E.

B. TESTS

1. Test reports on 1) Air Infiltration Test, per FBC, TAS 202-94
   2) Uniform Static Air Pressure Test, Loading per FBC, TAS 202-94
   3) Water Resistance Test, per FBC, TAS 202-94
   4) Large Missile Impact Test per FBC, TAS 201-94
   5) Cyclic Wind Pressure Loading per FBC, TAS 203-94

   along with marked-up drawings and installation diagram of an aluminum clad wood window, prepared by Stork Materials Technology, Test Report No. **SMT-180-6799**, dated 06/01/04 signed and sealed by John D. Lee, P.E.

C. CALCULATIONS

1. Anchor Calculations, ASTM-E1300, and structural analysis, dated 08/31/04, prepared by W.W. Schaefer Engineering& Consultant, P.A., signed and sealed by Warren W. Schaffer, P.E.

D. QUALITY ASSURANCE

1. Miami Dade Building Code Compliance Office (BCCO).

E. MATERIAL CERTIFICATIONS

1. Notice of Acceptance No. **01-1204.01** issued to E.I. DuPont DeNemours for their "Sentry ® Plus" dated 1/17/02, expiring on 1/14/07.
2. Notice of Acceptance No. **00-1212.04** issued to E.I. DuPont DeNemours for "Dupont Butacite ® PVB", dated 02/15/01, expiring on 12/12/05.

F. STATEMENTS

1. Statement letter of conformance and no financial interest, dated 08/31/04, signed and sealed by Warren W. Schaefer, P.E.
2. Letter from Pella Corporation, dated 08/30/04, designating Warren Schaefer of W.W. Schaefer Engineering & Consulting, as the contact person for this file.

G. OTHER

1. Letter from the consultant stating that the product is in compliance with the Florida Building Code (FBC)

Hermino F. Gonzalez, P.E.
Director, Building Code Compliance Office
NOA No 04-0907.04
Expiration Date: November 04, 2009
Approval Date: November 04, 2004

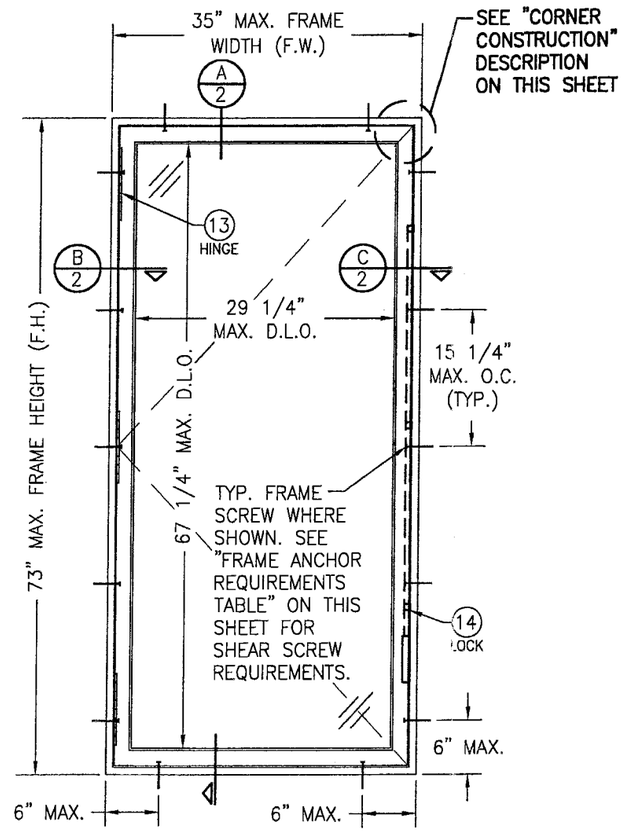

EXTERIOR ELEVATION
SINGLE CASEMENT WINDOW
SCALE: 3/4"=1'-0"

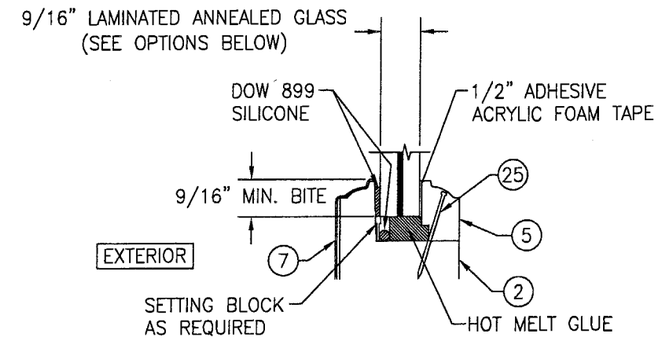

TYPICAL GLAZING DETAIL

OPTION 1: 9/16" DUPONT BUTACITE PVB LAMINATED (1/4" AN/0.09" PVB/1/4" AN)

OPTION 2: 9/16" DUPONT SENTRY GLASS PLUS LAMINATED (1/4" AN/0.09" SGP/1/4" AN)

ALLOWABLE WINDOW SIZE TABLE		
GLASS OPTION	MAX. WINDOW FRAME HEIGHT (IN.)	MAX. WINDOW FRAME WIDTH (IN.)
1	59	35
	65	32
	71	29
	73	28
2	73	35

ALLOWABLE DESIGN PRESSURE (SINGLE & MULTIPLE WINDOWS)
+/-75 PSF

GENERAL NOTES

1. THESE WINDOW SYSTEMS HAVE BEEN TESTED, ANALYZED AND APPROVED FOR DESIGN PRESSURES NOT TO EXCEED THOSE SHOWN IN THE "ALLOWABLE DESIGN LOADS" TABLE(S).
2. BUCKING, OPENINGS & BUCKING FASTENERS MUST BE PROPERLY DESIGNED & INSTALLED TO TRANSFER WIND LOADS TO THE STRUCTURE.
3. ALL HARDWARE & FASTENERS SHALL BE IN ACCORDANCE WITH THESE DRAWINGS & MAY NOT VARY UNLESS SPECIFICALLY MENTIONED ON THE DRAWINGS.
4. THE DETAILS & SPECIFICATIONS SHOWN HEREIN REPRESENT THE PRODUCTS TESTED & PROPOSED FOR WATER, AIR, IMPACT, CYCLIC & UNIFORM STATIC AIR PRESSURE TESTING IN CONFORMANCE WITH FLORIDA BUILDING CODE PROTOCOLS TAS-201, 202 & 203 FOR LARGE MISSILE IMPACT WINDOWS.
5. THESE WINDOW SYSTEMS HAVE BEEN DESIGNED IN ACCORDANCE WITH THE FLORIDA BUILDING CODE (FBC) FOR HIGH VELOCITY HURRICANE ZONES (HVHZ).
6. IMPACT SHUTTERS ARE NOT REQUIRED WITH THESE WINDOWS.
7. ALL ANCHORS SHALL BE INSTALLED AS SPECIFIED ON THESE DRAWINGS. SPECIFIED EMBEDMENT TO BASE MATERIAL SHALL BE BEYOND WALL FINISH OR STUCCO.

CORNER CONSTRUCTION:

WOOD JAMB: MORTISE & TENON AND JOINED WITH (3) 1/2" X 2 1/4" 16 GA. STAPLES PER CORNER.

JAMB CLAD: MITER CUT AND JOINED WITH CORNER KEY AND (2) NO. 6 X 1/2" SCREWS PER CORNER.

WOOD SASH: SASH IS MORTISED & TENONED, JOINED WITH (1) 1 1/2" 15 GA. FINISH NAIL PER CORNER AND GLUED WITH A THERMOSETTING EMULSION ADHESIVE; DUROLOK BY NATIONAL STARCH & CHEMICAL COMPANY.

SASH CLAD: LAPPED AND MITERED AT CORNERS.

FRAME ANCHOR REQUIREMENTS TABLE			
OPENING TYPE (SUBSTRATE)	JAMB TO OPENING FASTENER TYPE	MINIMUM EMBED	MINIMUM EDGE DIST.
2X_ WOOD FRAME OR BUCK	NO. 10 SMS SCREW	1 1/4"	3/4"
CMU/CONCRETE	(1) 3/16" CONCRETE SCREW	1 1/4"	2"
(1) CONCRETE SCREWS SHALL BE ELCO OR ITW RAMSET/RED HEAD TAPCONS, HILTI KWIK-CON II OR POWERS RAWL TAPPER (HARDENED STEEL OR S.S.).			

* ANCHOR NOTE: FRAME MAY BE EITHER DIRECT MOUNTED TO THE OPENING, MOUNTED ONTO A CONTINUOUS WOOD SPACER, OR ANCHORED TO A MIN. 2x4 NO. 3 SOUTHERN PINE WOOD BUCK. WHEN ANCHORED TO A 2x4 BUCK, NO. 10 SHEAR SCREWS SHALL BE USED. WHEN DIRECT MOUNTED OR MOUNTED WITH SPACER, 3/16" CONCRETE SCREWS SHALL BE USED. SEE "ANCHOR REQUIREMENTS TABLE" FOR EMBED REQUIREMENTS.

Approved as complying with the Florida Building Code
Date 11/04/04
NOA# 04-0902.04
Miami Dade Product Control Division
By

DRAWN BY: K.P.S.	CHECKED BY: W.W.S.
PLOT: 1=16	DATE: 07/20/04

NO.	REVISION DESCRIPTION	BY	DATE

DRAWING TITLE
ARCHITECT SERIES ALUMINUM CLAD WOOD IMPACT CASEMENT WINDOW

MANUFACTURER
PELLA CORPORATION
102 MAIN STREET
PELLA, IA 50219
641-621-1000

CONSULTANTS
W. W. SCHAEFER ENGINEERING & CONSULTING, P.A.
8895 N. MILITARY TRAIL; SUITE C-204
PALM BEACH GARDENS, FL 33410
PHONE: 561-775-4902 FAX: 561-775-4903

CERTIFICATION
AUG 3 1 2004
WARREN W. SCHAEFER, P.E.
P.E. NO. 44135

DRAWING NO. 1316
REV.
SHEET NO. 1 OF 2

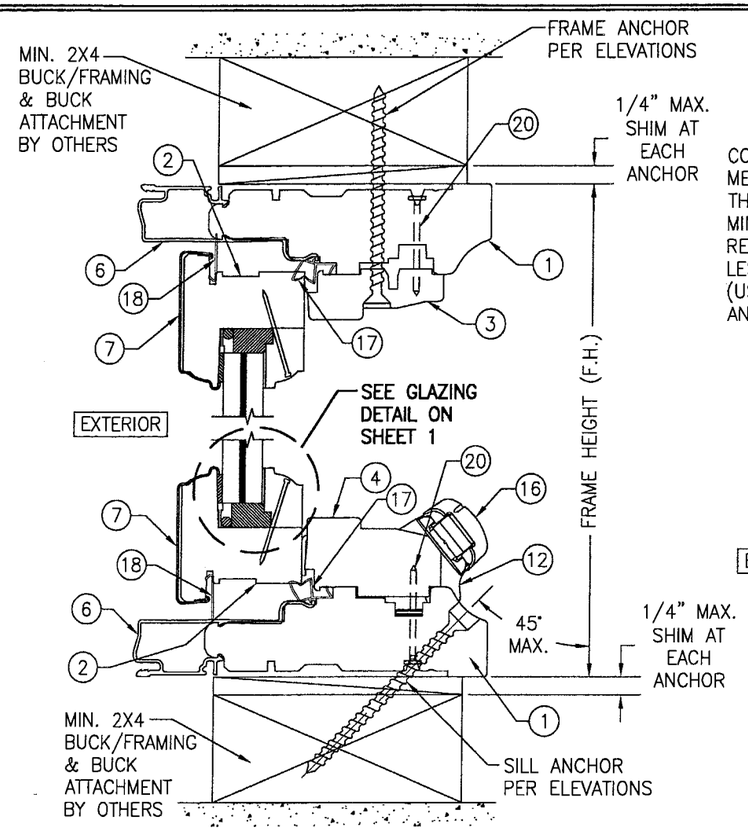

SECTION A/2
SCALE: 1/2 FULL

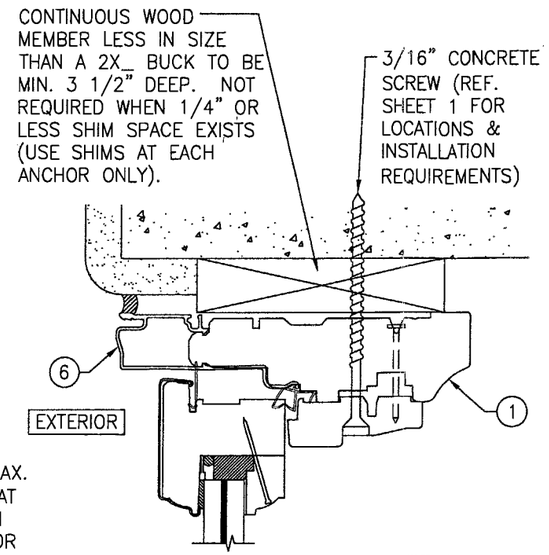

OPTIONAL DIRECT MOUNT DETAIL

FOR DETAIL NOT SHOWN, SEE OTHER SECTIONS (HEAD SECTION SHOWN; SIDES AND SILL SIMILAR)

ITEM #	PART #	ITEM DESCRIPTION	MANUFACTURER/NOTES
		PARTS	
1	35BG	JAMB	* WOOD
2	1A5S	SASH	* WOOD
3	30C4	HEAD & SIDE STOP	* WOOD
4	33BF	SILL STOP	* WOOD
5	–	GLASS STOP	* WOOD
6	0AJE	FRAME COVER	6063–T6 ALUMINUM
7	45D5	SASH COVER	3003–H14 OR 3105–H24 ALUMINUM
		HARDWARE	
12	2ABA	INTEGRATED EGRESS ROTO OPERATOR	AS REQUIRED TO OPERATE WINDOW
13	14ON	8" STAINLESS STEEL BUTT HINGE	PELLA
14	16B2	LOCK ASSEMBLY	PELLA
15	–	SASH STRIKE	1 PER LOCK CATCH
16	16BF	OPERATOR CRANK	AS REQUIRED TO OPERATE WINDOW
		SEALS AND SEALANTS	
17	76Q3	PVC WEATHERSTRIP	PELLA
18	75T2	PVC RAINSTRIP	PELLA
		MISC. FASTENERS	
20	–	1 3/8" RING SHANK NAIL	4" FROM CORNERS & 6" – 8" O.C.
21	–	#6 X 3/4" S.S. FH SCREW	12 PER HINGE LEAF
22	–	#6 X 3/4" S.S. FH SCREW	8 PER HINGE LEAF
23	–	3/16" X .540 POP RIVET	8 PER HINGE
24	–	#8 X 1 1/2" S.S. FH SCREW	2 PER SASH STRIKE
25	–	15 GA. X 1 1/4" FINISH NAIL	3" FROM CORNERS & 6" MAX. O.C.

* WOOD USED WITH TEST UNITS WAS SELECT WESTERN PINE. ALTERNATE WOOD SPECIES TO BE APPLICABLE WITH THESE WINDOWS IS MIN. SELECT MAHOGANY, PONDEROSA PINE, SOUTHERN PINE, OAK, CHERRY, MAPLE, DOUGLAS FIR & CYPRESS.

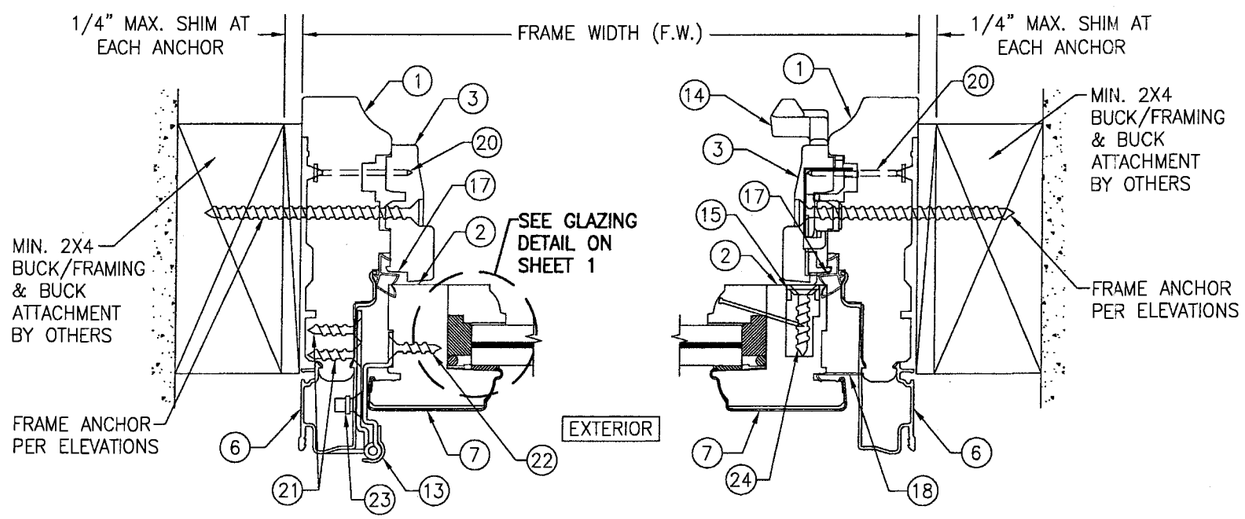

SECTION B/2
SCALE: 1/2 FULL

SECTION C/2
SCALE: 1/2 FULL

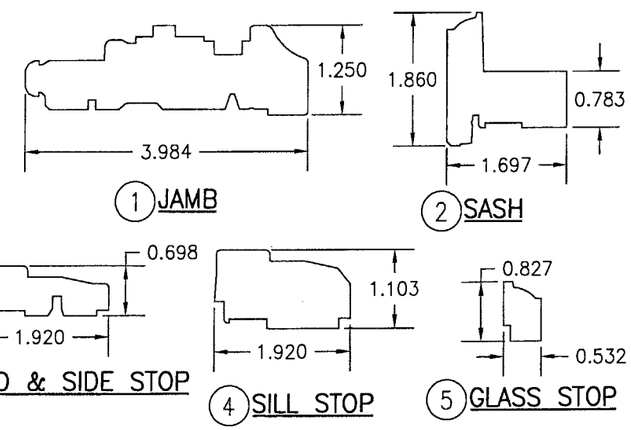

1 JAMB
2 SASH
3 HEAD & SIDE STOP
4 SILL STOP
5 GLASS STOP

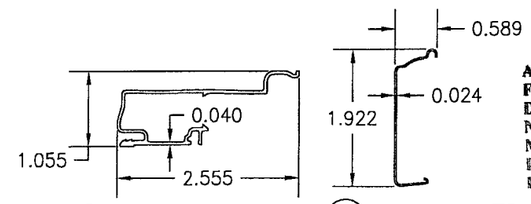

6 FRAME COVER
7 SASH COVER

Approved as complying with the Florida Building Code
Date 11/04/04
NOA# 04-0903.04
Miami Dade Product Control Division
By

NO.	REVISION DESCRIPTION	BY	DATE

DRAWN BY: K.P.S. | CHECKED BY: W.W.S.
PLOT: 1=2 | DATE: 07/20/04

DRAWING TITLE
ARCHITECT SERIES ALUMINUM CLAD WOOD IMPACT CASEMENT WINDOW

MANUFACTURER
PELLA CORPORATION
102 MAIN STREET
PELLA, IA 50219
641–621–1000

CONSULTANTS
W. W. SCHAEFER ENGINEERING & CONSULTING, P.A.
8895 N. MILITARY TRAIL; SUITE C-204
PALM BEACH GARDENS, FL 33410
PHONE: 561-775-4902 FAX: 561-775-4903

CERTIFICATION
AUG 31 2004
WARREN W. SCHAEFER P.E.
P.E. NO. 44135

DRAWING NO. 1316 | REV.
SHEET NO. 2 OF 2