MIAMI-DADE COUNTY

BUILDING CODE COMPLIANCE OFFICE (BCCO)
PRODUCT CONTROL DIVISION

MIAMI-DADE COUNTY, FLORIDA
METRO-DADE FLAGLER BUILDING
140 WEST FLAGLER STREET, SUITE 1603
MIAMI, FLORIDA 33130-1563
(305) 375-2901 FAX (305) 375-2908

NOTICE OF ACCEPTANCE (NOA)

Miami Wall Systems, Inc.
701 West 25 Street
Hialeah, FL 33010

SCOPE:
This NOA is being issued under the applicable rules and regulations governing the use of construction materials. The documentation submitted has been reviewed by Miami-Dade County Product Control Division and accepted by the Board of Rules and Appeals (BORA) to be used in Miami Dade County and other areas where allowed by the Authority Having Jurisdiction (AHJ).

This NOA shall not be valid after the expiration date stated below. The Miami-Dade County Product Control Division (In Miami Dade County) and/or the AHJ (in areas other than Miami Dade County) reserve the right to have this product or material tested for quality assurance purposes. If this product or material fails to perform in the accepted manner, the manufacturer will incur the expense of such testing and the AHJ may immediately revoke, modify, or suspend the use of such product or material within their jurisdiction. BORA reserves the right to revoke this acceptance, if it is determined by Miami-Dade County Product Control Division that this product or material fails to meet the requirements of the applicable building code.

This product is approved as described herein, and has been designed to comply with the Florida Building Code, including the High Velocity Hurricane Zone.

DESCRIPTION: Series 100 Aluminum Sliding Glass Door – Impact Resistant

APPROVAL DOCUMENT: Drawing No. **MWS 100-1**, titled "SGD Series 100 Large Missile", sheets 1 through 4 of 4, dated 08/02/04, prepared by manufacturer, bearing the Miami-Dade County Product Control Revision stamp with the Notice of Acceptance number and expiration date by the Miami-Dade County Product Control Division.

MISSILE IMPACT RATING: Large and Small Missile Impact Resistant

LABELING: Each unit shall bear a permanent label with the manufacturer's name or logo, city, state and following statement: "Miami-Dade County Product Control Approved", unless otherwise noted herein.

RENEWAL of this NOA shall be considered after a renewal application has been filed and there has been no change in the applicable building code negatively affecting the performance of this product.

TERMINATION of this NOA will occur after the expiration date or if there has been a revision or change in the materials, use, and/or manufacture of the product or process. Misuse of this NOA as an endorsement of any product, for sales, advertising or any other purposes shall automatically terminate this NOA. Failure to comply with any section of this NOA shall be cause for termination and removal of NOA.

ADVERTISEMENT: The NOA number preceded by the words Miami-Dade County, Florida, and followed by the expiration date may be displayed in advertising literature. If any portion of the NOA is displayed, then it shall be done in its entirety.

INSPECTION: A copy of this entire NOA shall be provided to the user by the manufacturer or its distributors and shall be available for inspection at the job site at the request of the Building Official.
This NOA **revises NOA # 01-0123.02** and consists of this page 1 and evidence pages E-1 and E-2, as well as approval document mentioned above.
The submitted documentation was reviewed by **Manuel Perez, P.E.**

PRODUCT CONTROL ACCEPTED

Miami Wall Systems, Inc.

NOTICE OF ACCEPTANCE: EVIDENCE SUBMITTED

A. DRAWINGS

1. Manufacturer's die drawings and sections.
2. Drawing No M**WS 100-1**, Sheets 1 through 4 of 4, titled "SGD Series 100 Large Missile", dated 08/02/04, prepared by manufacturer.

B. TESTS

1. Test reports on 1)Uniform Static Air Pressure Test, Loading per FBC TAS 202-94
   2)Large Missile Impact Test per FBC, TAS 201-94
   3)Cyclic Wind Pressure Loading per FBC, TAS 203-94
   along with marked-up drawings and installation diagram of an aluminum sliding glass door OXXO configuration, prepared by Fenestration Testing Laboratory, Inc., Test Report No. **FTL-4297**, dated 08/20/04, signed and sealed by Edmundo J. Largaespada, P.E.
2. Test reports on 1) Air Infiltration Test, per SFBC, PA 202-94
   2)Uniform Static Air Pressure Test, Loading per SFBC, PA 202-94
   3) Water Resistance Test, per SFBC, PA 202-94
   4) Large Missile Impact Test per SFBC, PA 201-94
   5) Cyclic Wind Pressure Loading per SFBC, PA 203-94
   6) Forced Entry Test, per SFBC 3603.2 (b) and PA 202-94
   along with marked-up drawings and installation diagram of an aluminum sliding door, prepared by Fenestration Testing Laboratory, Inc., Test Report No. **FTL-2841**, dated 12/22/00, signed and sealed by Jose A. Acevedo, P.E.

C. CALCULATIONS

1. Comparative analysis and structural analysis, dated 1/19/01, prepared by Applied Engineering Concepts, Inc., signed and sealed by Sergio Alcorta, P.E.

D. QUALITY ASSURANCE

1. Miami Dade Building Code Compliance Office (BCCO).

E. MATERIAL CERTIFICATIONS

1. Notice of Acceptance No. **98-0608.03** issued to E.I. DuPont DeNemours for "Sentry Glass Plus" dated 01/14/99, expiring on 01/14/02.
2. Notice of Acceptance No. **00-0509.06** issued to Viracon, Inc. for their "StormGuard (laminate)" dated 01/25/01, expiring on 04/14/03.
3. Notice of Acceptance No. **02-0828.15** issued to E.I. DuPont DeNemours for "**DuPont Butacite PVB Material**" dated 11/21/02, expiring on 12/11/05.

Manuel Perez, P.E.
Product Control Examiner
NOA No 04-0908.02
Expiration Date: December 20, 2006
Approval Date: January 6, 2005

NOTICE OF ACCEPTANCE: EVIDENCE SUBMITTED

F. STATEMENTS

1. Statement letter of no financial interest, dated November 28, 2001, signed and sealed by Ramon Guillen, P.E. of Applied Engineering Concept, Inc.
2. Laboratory compliance letter for Test Report No. **FTL-00149** issued by Fenestration Testing Laboratory, Inc., dated 2/18/01, signed and sealed by Antonio Acevedo, P.E.

G. OTHER

1. Notice of Acceptance No. **01-0123.02**, issued to Miami Wall Systems, Inc. for their Series 100 Aluminum Sliding Glass Door – Impact Resistant, approved on 12/20/01 and expiring on 12/20/06.

Manuel Perez, P.E.
Product Control Examiner
NOA No 04-0908.02
Expiration Date: December 20, 2006
Approval Date: January 6, 2005

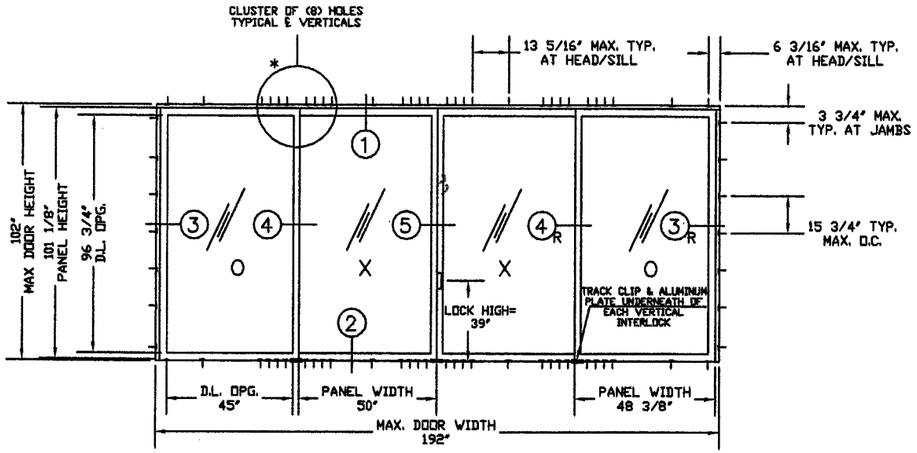

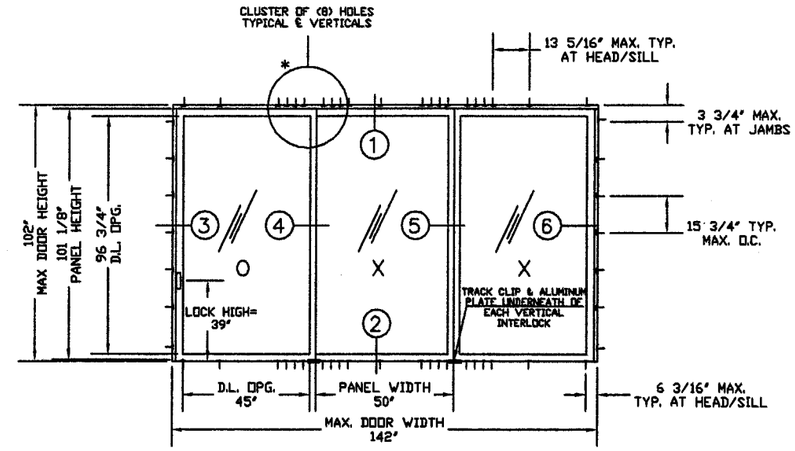

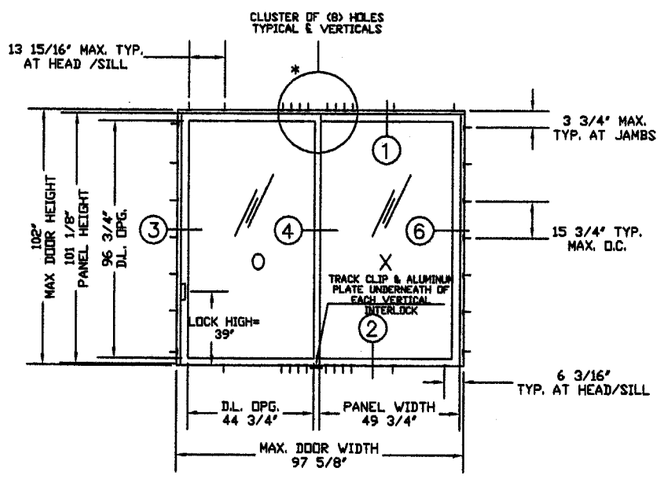

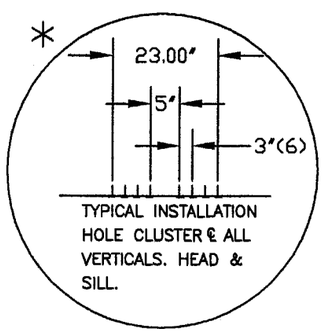

9/16" OVERALL LAMINATED GLAZING DETAIL LARGE MISSILE

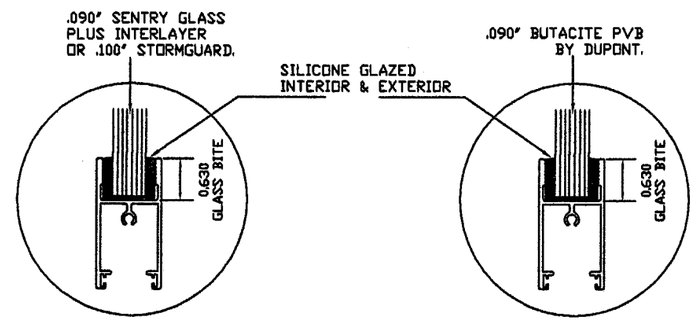

GLASS TYPE

(A) 1/4"HEAT STR. GLASS
.090" SENTRY GLASS PLUS BY DUPONT
1/4"HEAT STR. GLASS

(B) 1/4"HEAT STR. GLASS
.100" STORMGUARD BY VIRACON
1/4"HEAT STR. GLASS

GLASS TYPE

(C) 1/4"HEAT STR. GLASS
.090" BUTACITE PVB BY DUPONT
1/4"HEAT STR. GLASS

DESIGN PRESSURE RATING		
GLAS TYPE: A & B	100.0 PSF POSITIVE	100.0 PSF NEGATIVE
GLAS TYPE: C	70.0 PSF POSITIVE	70.0 PSF NEGATIVE

GENERAL NOTES:

(1) FRAME HEAD AND SILL USE SAME FASTENER SPACING.

(2) MAX. OPERATING PANEL SIZE: 50 7/16"x101 7/8" MAX. FIXED PANEL SIZE: 49 1/2"x101 1/8"

(3) ALL ANCHORS AT JAMBS ARE DOUBLE ROW.

PRODUCT REVISED
as complying with the Florida Buiding Code
Acceptance No 04-0908.02
Expiration Date DEC. 29, 2006
By Manuel Sarez
Miami/Dade Product Control Division

Miami Wall Systems, Inc.
701 West 25th street
Hialeah, Florida. 33010
Phone:(305) 888-2300 Fax:(305) 888-3058

SGD SERIES 100 LARGE MISSILE

DOOR ELEVATIONS

NO.	DATE	REVISION

DATE: 08/02/04
SCALE: N.T.S.
DWG. BY: JCALAFAT
CHK. BY:
DWG NO.:
SHEET 1 OF 4

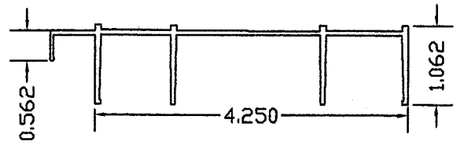

(1) **FRAME HEAD**
MATL (6105-T5)
1:2

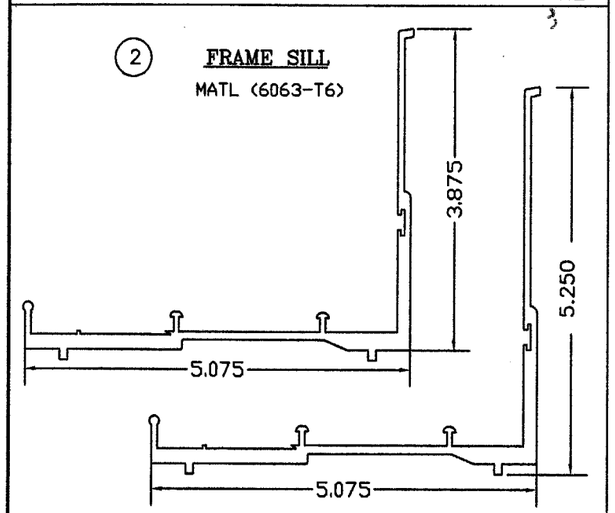

(2) **FRAME SILL**
MATL (6063-T6)

(2A) **FRAME SILL**
MATL (6063-T6)
1:2

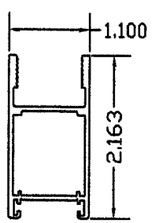

(5) **BOTTOM RAIL, MOVING**
MATL (6063-T6)
1:2

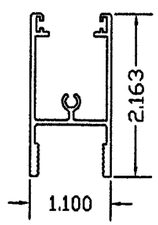

(4) **TOP RAIL**
(6) **BOTTOM RAIL FIXED**
MATL (6063-T6)
1:2

(11) **TRACK CLIP**
MATL (6105-T5)

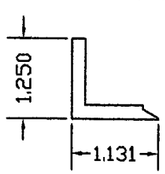

1:2

(13) **TRACK ADAPTER**
MATL (6063-T6)

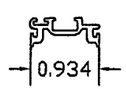

1:2

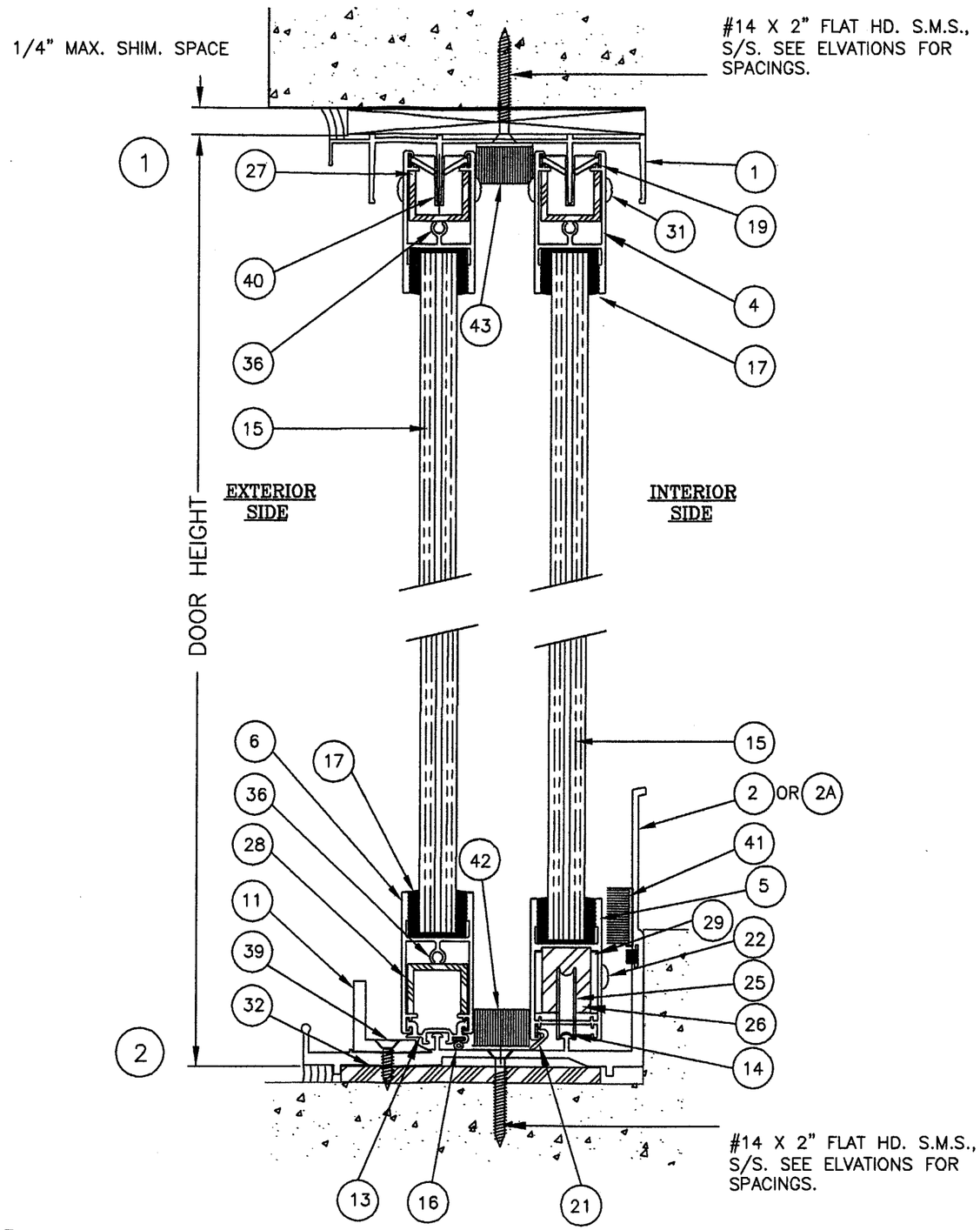

NO SCALE

PRODUCT REVISED
as complying with the Florida
Buiding Code
Acceptance No. 04-0908.02
Expiration Date DEC. 20, 2006
By
Miami Dade Product Control
Division

Miami Wall Systems, Inc.
701 West 25th street
Hialeah, Florida. 33010
Phone:(305) 888-2300 Fax:(305) 888-3058

SGD SERIES 100 LARGE MISSILE

STANDARD INSTALLATION DETAILS HEAVY REINFORCEMENT

NO.	DATE	REVISION

DATE: 08/02/04
SCALE: 1:2
DWG. BY: JCALAFAT
CHK. BY:
DWG NO.:
SHEET 2 OF 4

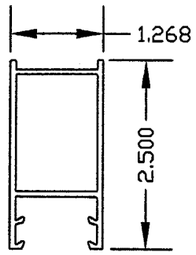

(12) LOCK STILE
MATL (6063-T6) 1:2

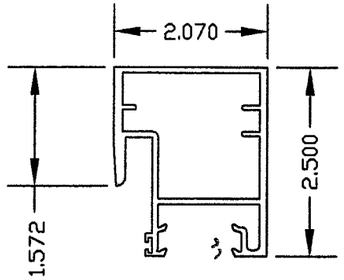

(7) INTERLOCK STILE
MATL (6105-T5) 1:2

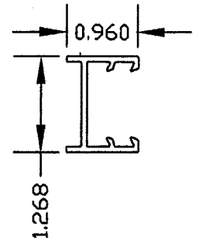

(9) FIXED JAMB STILE
MATL (6063-T6) 1:2

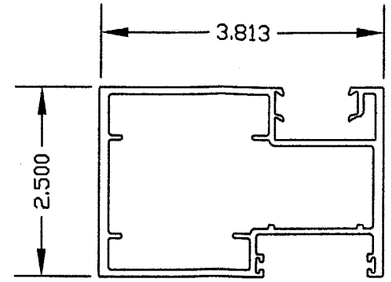

(8) FEMALE ASTRAGAL
MATL (6063-T6) 1:2

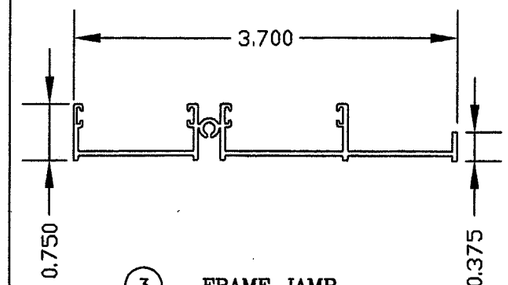

(3) FRAME JAMB
MATL (6063-T6) 1:2

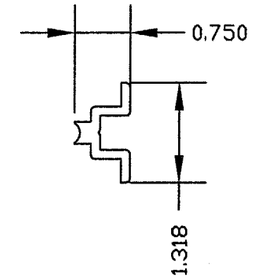

(10) JAMB STILE RETAINER CLIP
MATL (6063-T6) 1:2

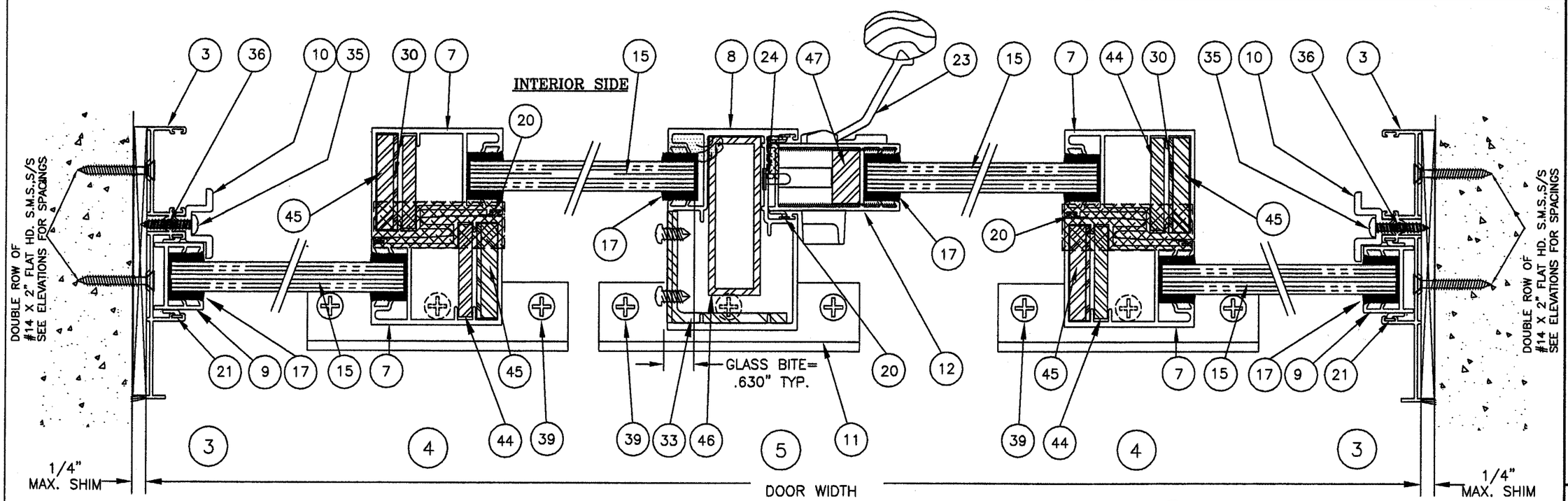

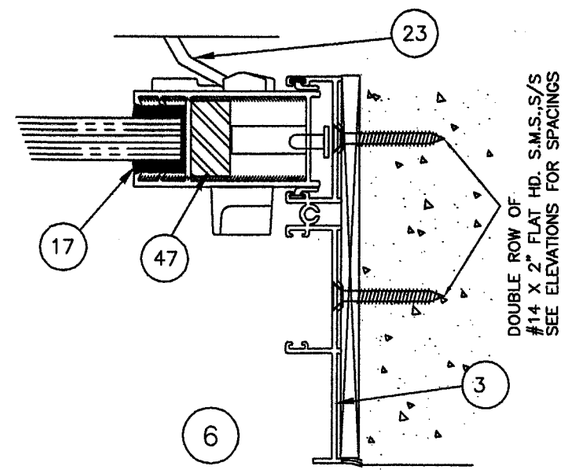

NO SCALE

PRODUCT REVISED
as complying with the Florida Building Code
Acceptance No 04-0908.02
Expiration Date DEC. 20, 2006
By Manuel Perez
Miami-Dade Product Control Division

Miami Wall Systems, Inc.
701 West 25th street
Hialeah, Florida. 33010
Phone:(305) 888-2300 Fax:(305) 888-3058

SGD SERIES 100 LARGE MISSILE

STANDARD INSTALLATION DETAILS
HEAVY REINFORCEMENT

NO.	DATE	REVISION

DATE: 08/02/04
SCALE: 1:2
DWG. BY: JCALAFAT
CHK. BY:
DWG NO.:
SHEET 3 OF 4

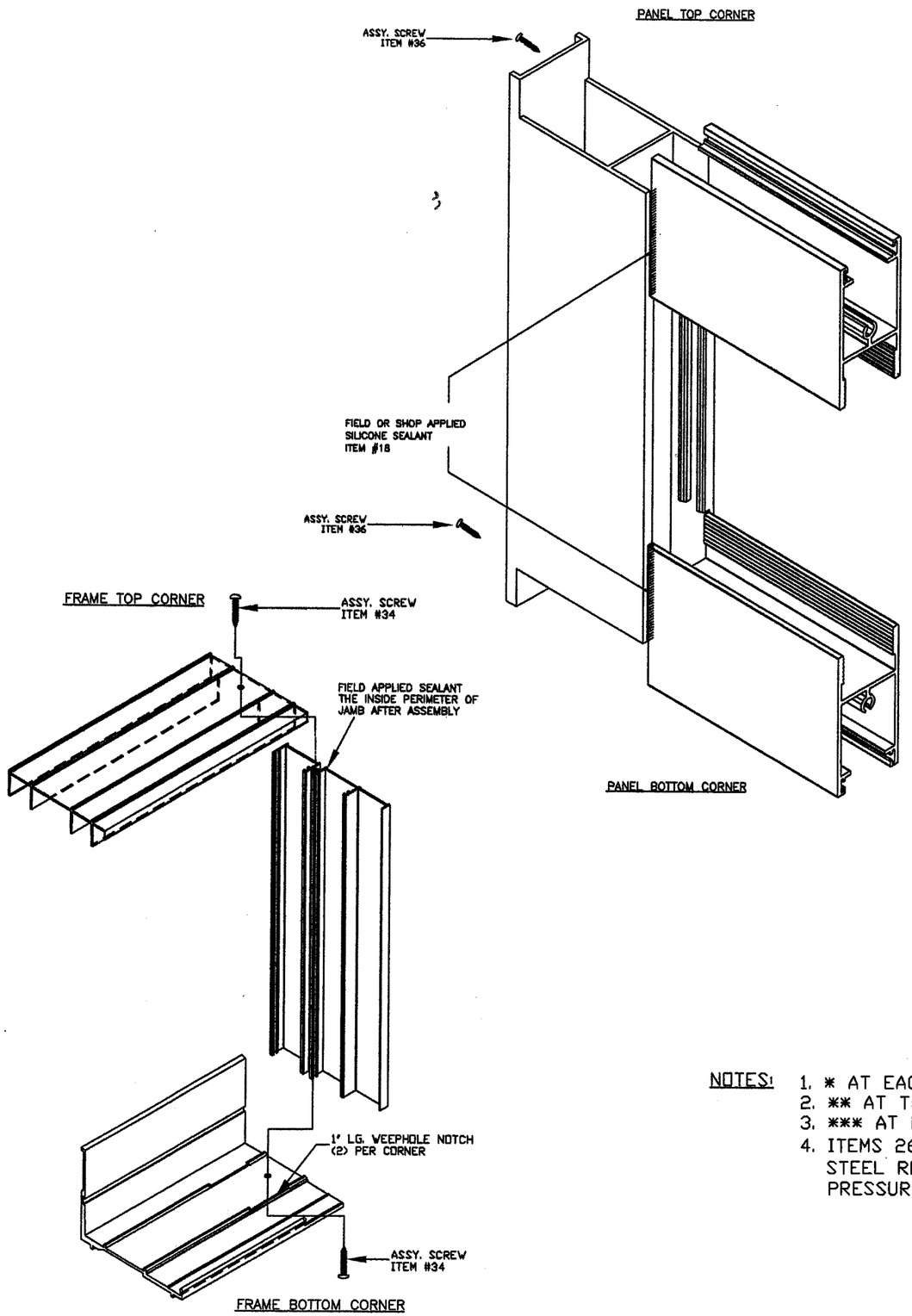

ITEM NO.	PART NO.	REQ'D	PART NAME	REMARKS
1	100-018	1	FRAME HEAD	FRAME
2	100-016	1	FRAME SILL	FRAME
2A	100-044	1	ALTERNATE FRAME SILL	FRAME
3	100-019	2	FRAME JAMB	FRAME
4	100-033	4	TOP RAIL	PANEL
5	100-032	2	BOTTOM RAIL, MOVING	PANEL
6	100-033	2	BOTTOM RAIL, FIXED	PANEL
7	100-029	4	INTERLOCK STILE	PANEL
8	100-031	1	FEMALE ASTRAGAL	PANEL
9	100-034	2	FIXED JAMB STILE	FIXED PANEL
10	100-020	4	JAMB STILE RETAINER CLIP	FXD. JAMB @3 1/2" FROM ENDS
11	100-028	3	TRACK CLIP	ASTRAGAL & INTRLK'S
12	100-030	1	LOCK STILE	PANEL
13	100-003	2	TRACK ADAPTER	
14	TYPE 1	1	JOHSON BROS., S.S. TRACK CAP	FRAME SILL
15		4	9/16" LAMINATED GLASS	SEE ELEVATIONS
16	G-131	AS REQ'D	PROTOTYPE, PLS. VINYL FLAP	BOT. RAIL PANELS, SINGLE ROW
17	SILICONE	AS REQ'D	GE-SSG4000 SEALANT	PANELS/GLASS
18	SILICONE	AS REQ'D	TREMCO SPECTREM 2	PANELS & FR. CORNERS
19	G-127	AS REQ'D	DS. BROWN. VINYL FLAP	TOP RAILS, DOUBLE ROW
20	G-115A	AS REQ'D	PROTOTYPE PLS., FLAP VINYL	INTERLOCK STILES, SINGLE ROW
21	G-115A	AS REQ'D	PROTOTYPE PLS., FLAP VINYL	FRAME JAMB, DOUBLE ROW
22		4	#10X3/4"P.H.S.M.S.,S/S	BOTT. MVG. RAIL (2)EACH
23	683-537	1	S/S LOCK\WOOD HANDEL ASS'Y.	SASH CONTROL LOCKSTILE
24	2536-10S/S	1	STAINLESS STEEL KEEPER	TRUTH FEMALE ASTG. STILE
25	3793	4	DELMAR TANDEM WHEELS	MOV. BOT. RAILS
26		2	STL BAR, 3/4'X1"	MOV. BOTOM RAILS (REINF'T)
27	100-040	4	AL. CH'L, 3/4"X1"X3/4"X1/8"	TOP RAIL, PANELS (REINF'T)
28	100-040	2	AL. CH'L, 3/4"X1"X3/4"X1/8"	FXD BOTT. RAIL PNLS. (REINF'T)
29		8	AL. PLATE, 15/16x.108x2 1/8"	REINF. PLT'S @ WHEEL ASS'Y***
30		4	AL. BAR, 1.844x1/4"x4"	ENDS INTRLK'S, PANELS.**
31		8	#10x3/8"P.H.S.M., S/S	TOP RAIL ALL PANELS(4)EACH
32		3	AL. PLATE 1/4"x4"x6"LG.	FR. SILL AT INTRLK/ASTRGL
33		1	AL ANGLE @ BOT OF FEM ASTRAGAL	2 5/16X2 1/8X12X1/4 THK.
34		4	#10X1" PH SMS SS	FRAME CORNERS (ASSY SCRW)
35		4	#10X1" PH SMS	FX'D JAMB, W/ITEM#10
36		16	#10X1" PH SMS SS	PANEL CORNERS (ASSY SCRW)
37		4	#10-32X1/2" PH SMS SS	BOT. LCKST'L W/ITEM#32(H REINF'T)
38		1	1/4"-20X3/4" FH SMS SS	BOT END ASTRAGAL (INTERIOR)
39		9	1/4"-20X1/2" PH SMS SS	FR SILL W/ITEM#11
40	#100-5	8	PLASTIC GUIDE	M+M PLASTICS, TOP RAIL
41		8	PAD PILE, 1/2X1 3/4X2 1/2"	ULTRA-PLUG,FR. SILL LOCK STILE
42		3	PILE PAD 1 13/16X2 1/2X3/8	FR. SILL ULTRAFAB
43		3	PILE PAD 1 13/16X2 1/2X5/8	FR. HEAD ULTRAFAB.
44		4	STL BAR 1/4" X 1" 3/4"	AT INTERLOCK STILE *
45		4	STL BAR 3/8" X 1" 3/4"	AT INTERLOCK STILE *
46		1	STL TUBE 1X3X1/8 THK	AT ASTRAGAL STILE
47		1	STL BAR 1/2" X 1"	AT LOCK STILE
48		AS REQ'D	EXP. FOAM, GREAT-STUFF	AT TOP & BOT. OF ASTRAGALS

NOTES:
1. * AT EACH SET OF INTERLOCKS.
2. ** AT TOP OF EACH INTERLOCK
3. *** AT MOVING BOTTOM RAIL(2) EACH WHEEL ASSEMBLY
4. ITEMS 26, 27, 28, 44, 45, 47 & 46 TO BE USED AT STEEL STEEL REINFORCED UNITS ONLY (FOR 100 PSF). SEE DESIGN PRESSURE RATING TABLE AT SHEET 1.

PRODUCT REVISED
as complying with the Florida Building Code
Acceptance No 04-0908.02
Expiration Date DEC. 20, 2006
By [signature]
Miami Dade Product Control Division

Miami Wall Systems, Inc.
701 West 25th street
Hialeah, Florida. 33010
Phone:(305) 888-2300 Fax:(305) 888-3058

SGD SERIES 100 LARGE MISSILE

BILL OF MATERIAL
EXTRUSION SUMMARY

NO.	DATE	REVISION

DATE: 08/02/04
SCALE: N.T.S.
DWG. BY: JCALAFAT
CHK. BY:
DWG NO.:
SHEET 4 OF 4