MIAMI-DADE

BUILDING CODE COMPLIANCE OFFICE (BCCO)
PRODUCT CONTROL DIVISION

MIAMI-DADE COUNTY, FLORIDA
METRO-DADE FLAGLER BUILDING
140 WEST FLAGLER STREET, SUITE 1603
MIAMI, FLORIDA 33130-1563
(305) 375-2901 FAX (305) 375-2908

NOTICE OF ACCEPTANCE (NOA)

Crawford Tracey Corp.
3301 SW 13 Drive
Deerfield Beach, FL 33442

SCOPE:

This NOA is being issued under the applicable rules and regulations governing the use of construction materials. The documentation submitted has been reviewed by Miami-Dade County Product Control Division and accepted by the Board of Rules and Appeals (BORA) to be used in Miami Dade County and other areas where allowed by the Authority Having Jurisdiction (AHJ).

This NOA shall not be valid after the expiration date stated below. The Miami-Dade County Product Control Division (In Miami Dade County) and/or the AHJ (in areas other than Miami Dade County) reserve the right to have this product or material tested for quality assurance purposes. If this product or material fails to perform in the accepted manner, the manufacturer will incur the expense of such testing and the AHJ may immediately revoke, modify, or suspend the use of such product or material within their jurisdiction. BORA reserves the right to revoke this acceptance, if it is determined by Miami-Dade County Product Control Division that this product or material fails to meet the requirements of the applicable building code.

This product is approved as described herein, and has been designed to comply with the Florida Building Code, including the High Velocity Hurricane Zone.

DESCRIPTION: Pro-Tech 45 Aluminum Window Wall System – Large Missile Impact

APPROVAL DOCUMENT: Drawing No. **W04-43,** titled "Pro-Tech 45 Alum. Window Wall System (L.M.I.)", sheets 1 through 9 of 9, dated 05/25/04 with revision **"A"** dated 10/13/04, prepared by AL-Farooq Corporation, signed and sealed by Humayoun Farooq, P.E., bearing the Miami-Dade County Product Control Approval stamp with the Notice of Acceptance number and approval date by the Miami-Dade County Product Control Division.

MISSILE IMPACT RATING: Large and Small Missile Impact

LABELING: Each unit shall bear a permanent label with the manufacturer's name or logo, city, state and following statement: "Miami-Dade County Product Control Approved", unless otherwise noted herein.

RENEWAL of this NOA shall be considered after a renewal application has been filed and there has been no change in the applicable building code negatively affecting the performance of this product.

TERMINATION of this NOA will occur after the expiration date or if there has been a revision or change in the materials, use, and/or manufacture of the product or process. Misuse of this NOA as an endorsement of any product, for sales, advertising or any other purposes shall automatically terminate this NOA. Failure to comply with any section of this NOA shall be cause for termination and removal of NOA.

ADVERTISEMENT: The NOA number preceded by the words Miami-Dade County, Florida, and followed by the expiration date may be displayed in advertising literature. If any portion of the NOA is displayed, then it shall be done in its entirety.

INSPECTION: A copy of this entire NOA shall be provided to the user by the manufacturer or its distributors and shall be available for inspection at the job site at the request of the Building Official.

This NOA consists of this page 1 and evidence pages E-1 and E-2, as well as approval document mentioned above

The submitted documentation was reviewed by **Herminio F. Gonzalez, P.E., Director, BCCO**

11/5/04

PRODUCT CONTROL ACCEPTED

Crawford Tracey Corp.

NOTICE OF ACCEPTANCE: EVIDENCE SUBMITTED

A. DRAWINGS

1. Manufacturer's die drawings and sections.
2. Drawing No. **W04-43,** titled "Pro-Tech 45 Alum Window Wall System (L.M.I)", sheets 1 through 9 of 9, prepared by AL-Farooq, dated 05/25/04, with revision **"A"** dated 10/13/04, signed and sealed by Humayoun Farooq, P.E.

B. TESTS

1. Test reports on 1) Air Infiltration Test, per FBC, TAS 202-94
   2) Uniform Static Air Pressure Test, Loading per FBC, TAS 202-94
   3) Water Resistance Test, per FBC, TAS 202-94
   4) Large Missile Impact Test per FBC, TAS 201-94
   5) Cyclic Wind Pressure Loading per FBC, TAS 203-94

   along with marked-up drawings and installation diagram of an aluminum window wall system, prepared by American Test Lab of South Florida, Test Report No. **ATL-0717.01-03**, dated 03/17/04, signed and sealed by William R. Mehner, P.E.
2. Test reports on 1) Air Infiltration Test, per FBC, TAS 202-94
   2) Uniform Static Air Pressure Test, Loading per FBC, TAS 202-94
   3) Water Resistance Test, per FBC, TAS 202-94
   4) Large Missile Impact Test per FBC, TAS 201-94
   5) Cyclic Wind Pressure Loading per FBC, TAS 203-94

   along with marked-up drawings and installation diagram of an aluminum window wall system, prepared by American Test Lab of South Florida, Test Report No. **ATL-0112.01-04**, dated 03/10/04, signed and sealed by William R. Mehner, P.E.

C. CALCULATIONS

1. Anchor Calculations, ASTM-E 1300, and structural analysis, prepared by AL-Farooq Corporation, Inc., dated 07/21/04, signed and sealed by Humayoun Farooq, P.E.

D. QUALITY ASSURANCE

1. Miami Dade Building Code Compliance Office (BCCO).

E. MATERIAL CERTIFICATIONS

1. Notice of Acceptance No. **03-0421.01** issued to Solutia, Inc. for "Saflex HP" dated 05/22/03, expiring on 04/14/08.
2. Notice of Acceptance No. **01-0205.02** issued to Solutia, Inc. for "Saflex/Keepsafe Maximum" dated 05/17/01, expiring on 05/21/06.
3. Notice of Acceptance No. **03-0415.13** issued to Solutia, Inc. for "Vanceva Composites" dated 12/11/03, expiring on 12/11/08.

Herminio F. Gonzalez, P.E
Director, Building Code Compliance Office
NOA No 04-0908.03
Expiration Date: November 25, 2009
Approval Date: November 25, 2004

NOTICE OF ACCEPTANCE: EVIDENCE SUBMITTED

F. STATEMENTS

1. Statement letter of conformance, dated 07/08/04, signed and sealed by Humayoun Farooq, P.E.
2. Statement letter of no financial interest, dated 07/08/04, signed and sealed by Humayoun Farooq, P.E.

G. OTHER

1. Letter from the consultant stating that the product is in compliance with the Florida Building Code (Code).

Herminio F. Gonzalez, P.E
Director, Building Code Compliance Office
NOA No 04-0908.03
Expiration Date: November 25, 2009
Approval Date: November 25, 2004

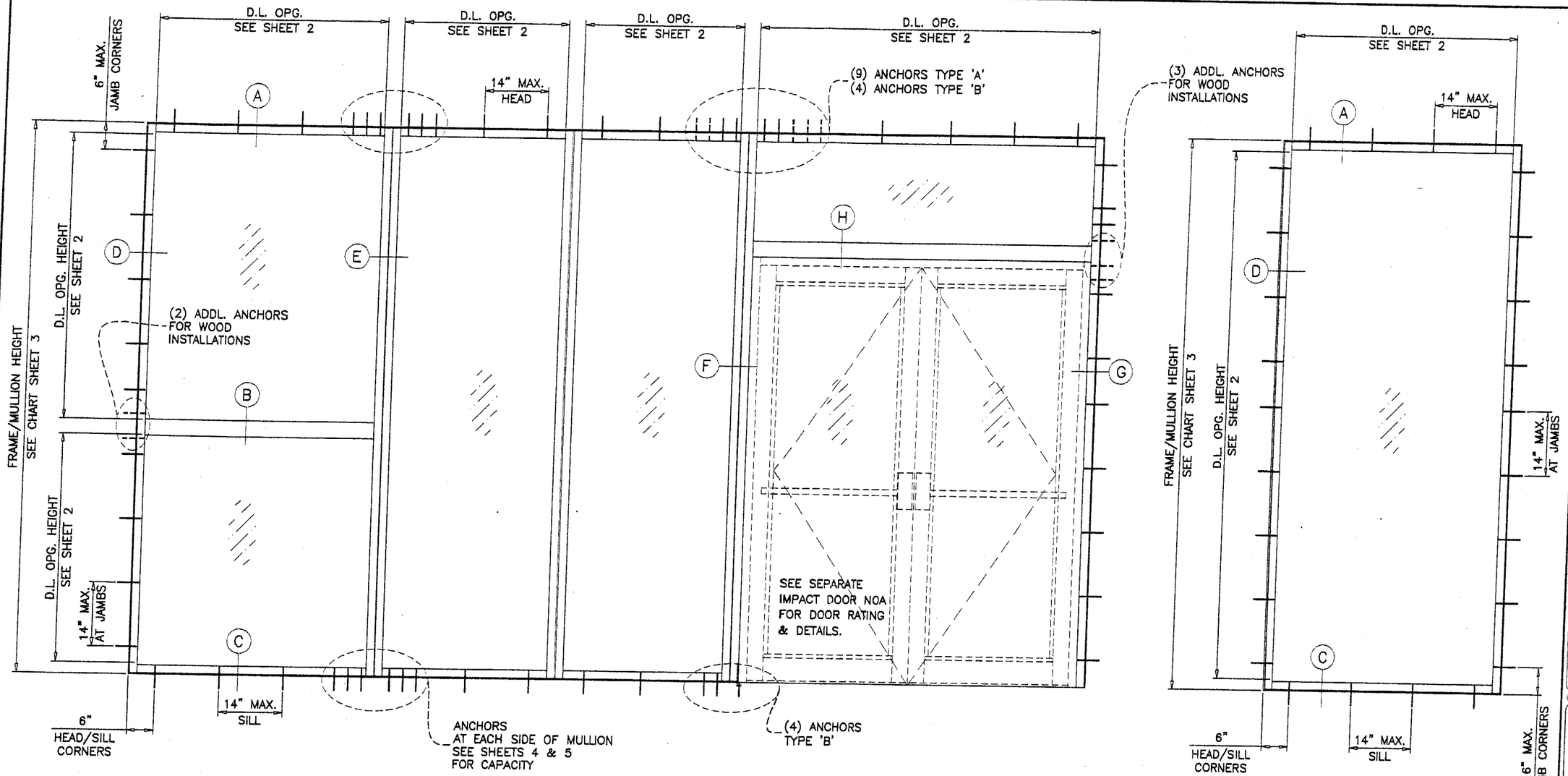

PRO-TECH 45 ALUM WINDOW WALL SYSTEM

WINDOW WALL SYSTEM IS RATED FOR LARGE MISSILE IMPACT. SHUTTERS ARE NOT REQUIRED.

THIS SYSTEM MAY BE USED IN CONJUNCTION WITH MIAMI-DADE COUNTY APPROVED IMPACT RESISTANT FRENCH DOORS.

CODE REQUIREMENTS FOR SAFEGUARDS MUST BE OBSERVED.

THIS PRODUCT HAS BEEN DESIGNED AND TESTED TO COMPLY WITH THE REQUIREMENTS OF THE FLORIDA BUILDING CODE INCLUDING HIGH VELOCITY HURRICANE ZONE.

WOOD BUCKS BY OTHERS, MUST BE ANCHORED PROPERLY TO TRANSFER LOADS TO THE STRUCTURE.

ANCHORS SHALL BE AS LISTED, SPACED AS SHOWN ON DETAILS. ANCHOR EMBEDMENT TO BASE MATERIAL SHALL BE BEYOND WALL DRESSING OR STUCCO.

ALL STEEL IN CONTACT WITH ALUMINUM TO BE PAINTED OR PLATED.

ANCHORING OR LOADING CONDITIONS NOT SHOWN IN THESE DETAILS ARE NOT PART OF THIS APPROVAL.

A 33% INCREASE IN ALLOWABLE STRESS IS USED IN DESIGN OF ANCHORS.

TYPICAL ELEVATIONS

INSTRUCTIONS:

USE CHARTS AS FOLLOWS.

STEP 1 DETERMINE DESIGN WIND LOAD REQUIREMENT BASED ON WIND VELOCITY, BLDG. HEIGHT, WIND ZONE USING APPLICABLE ASCE 7 STANDARD.

STEP 2 SEE CHARTS ON SHEETS 2 FOR DESIGN LOAD CAPACITY OF DESIRED GLASS SIZE.

STEP 3 CHECK MULLION CAPACITY FOR A GIVEN SPACING AND HEIGHT USING CHARTS ON SHEET 3
THE CAPACITY SHOULD EXCEED THE DESIGN LOAD.

STEP 4 USING CHARTS ON SHEETS 4 & 5 SELECT ANCHOR OPTION WITH DESIGN RATING MORE THAN DESIGN LOAD SPECIFIED IN STEP 1 ABOVE.

Approved as complying with the Florida Building Code
Date 11/25/04
NOA# 04-0908.03
Miami-Dade Product Control Division
By

Engr: DR. HUMAYOUN FAROOQ
STRUCTURES
FLA. PE # 16557
C.A.N. 3538

OCT 19 2004

AL-FAROOQ CORPORATION
ENGINEERS, PLANNERS & PRODUCT DESIGN
1235 SW 87 AVE
MIAMI, FLORIDA 33174
TEL. (305) 264-8100 FAX. (305) 262-6978
STORE\W04-43CTC

PRO-TECH 45 ALUM WINDOW WALL SYSTEM (L.M.I.)

CRAWFORD TRACEY CORPORATION
3301 SW 13TH DRIVE
DEERFIELD BEACH, FL. 33442-8101
TEL. (954) 698-6888 FAX. (954) 698-6889

revisions:

no	date	by	description
A	10.13.04		REV. PER BCCO COMMENTS

date: 05-25-04
scale: 1/2"=1'-0"
dr. by: HAMID
chk. by:

drawing no.
W04-43

GLASS LOAD CAPACITY – PSF			
NOMINAL DIMS.		GLASS TYPE 'A'	GLASS TYPE 'B'
D.L.O. WIDTH	D.L.O. HEIGHT	EXT.(+)&INT.(–)	EXT.(+)&INT.(–)
20"	74"	80.0	80.0
26"		80.0	80.0
32"		80.0	80.0
38"		80.0	80.0
44"		80.0	80.0
50"		80.0	80.0
51"		80.0	80.0
20"	80"	80.0	80.0
26"		80.0	80.0
32"		80.0	80.0
38"		80.0	80.0
44"		80.0	80.0
47–1/4"		80.0	80.0
20"	86"	80.0	80.0
26"		80.0	80.0
32"		80.0	80.0
38"		80.0	80.0
44"		80.0	80.0
20"	92"	80.0	80.0
26"		80.0	80.0
32"		80.0	80.0
38"		80.0	80.0
41–1/2"		80.0	80.0
20"	98"	80.0	80.0
26"		80.0	80.0
32"		80.0	80.0
38"		80.0	80.0
38–1/2"		80.0	80.0
20"	104"	80.0	80.0
26"		80.0	80.0
32"		80.0	80.0
36–1/4"		80.0	80.0
20"	110"	80.0	80.0
26"		80.0	80.0
32"		80.0	80.0
34–1/4"		80.0	80.0
20"	116"	80.0	80.0
26"		80.0	80.0
32"		80.0	80.0
32–1/2"		80.0	80.0
20"	120"	80.0	80.0
26"		80.0	80.0
31–1/2"		80.0	80.0

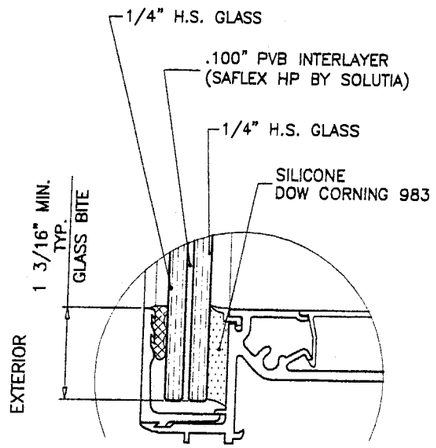

GLASS TYPE 'A'

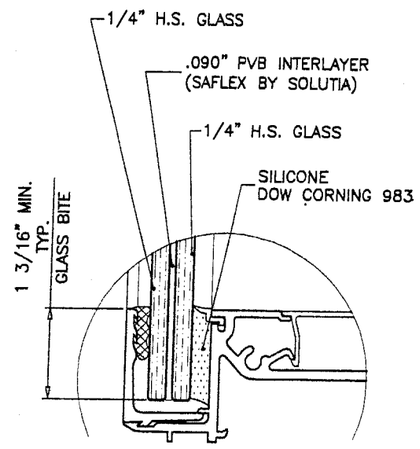

GLASS TYPE 'B'

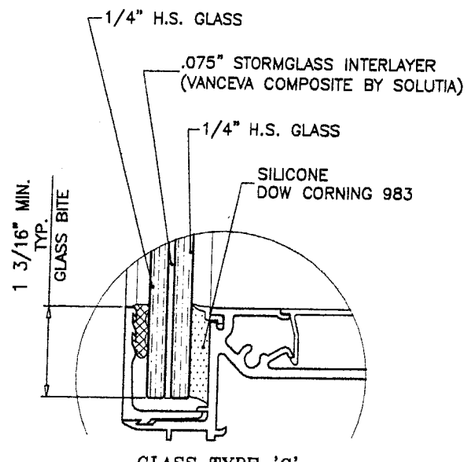

GLASS TYPE 'C'

GLAZING OPTIONS

GLASS LOAD CAPACITY – PSF		
NOMINAL DIMS.		GLASS TYPE 'C'
D.L.O. WIDTH	D.L.O. HEIGHT	EXT.(+)&INT.(–)
20"	74"	80.0
26"		80.0
32"		80.0
38"		80.0
44"		80.0
50"		80.0
56"		80.0
60"		80.0
66"		80.0
70–1/4"		80.0
20"	80"	80.0
26"		80.0
32"		80.0
38"		80.0
44"		80.0
50"		80.0
56"		80.0
60"		80.0
65"		80.0
20"	86"	80.0
26"		80.0
32"		80.0
38"		80.0
44"		80.0
50"		80.0
56"		80.0
60"		80.0
20"	92"	80.0
26"		80.0
32"		80.0
38"		80.0
44"		80.0
50"		80.0
56"		80.0
20"	98"	80.0
26"		80.0
32"		80.0
38"		80.0
44"		80.0
50"		80.0
53"		80.0

GLASS LOAD CAPACITY – PSF		
NOMINAL DIMS.		GLASS TYPE 'C'
D.L.O. WIDTH	D.L.O. HEIGHT	EXT.(+)&INT.(–)
20"	104"	80.0
26"		80.0
32"		80.0
38"		80.0
44"		80.0
50"		80.0
20"	110"	80.0
26"		80.0
32"		80.0
38"		80.0
44"		80.0
47–1/4"		80.0
20"	116"	80.0
26"		80.0
32"		80.0
38"		80.0
44"		80.0
44–3/4"		80.0
20"	120"	80.0
26"		80.0
32"		80.0
38"		80.0
43–1/4"		80.0

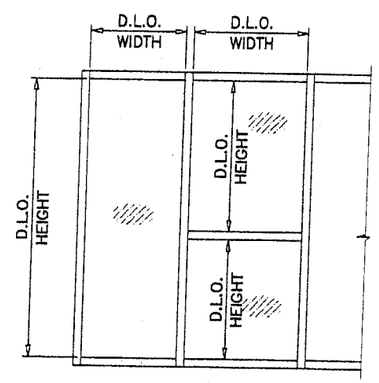

Engr: DR. HUMAYOUN FAROOQ
STRUCTURES
FLA. PE # 16557
C.A.N. 3538

OCT 19 2004

Approved as complying with the Florida Building Code
Date 11/25/04
NOA# 04-0908.03
Miami-Dade Product Control Division
By

AL-FAROOQ CORPORATION
ENGINEERS, PLANNERS & PRODUCT DESIGN
1235 SW 87 AVE
MIAMI, FLORIDA 33174
TEL. (305) 264-8100 FAX. (305) 262-6978
STORE\W04-43CTC

PRO-TECH 45 ALUM WINDOW WALL SYSTEM (L.M.I.)

CRAWFORD TRACEY CORPORATION
3301 SW 13TH DRIVE
DEERFIELD BEACH, FL. 33442-8101
TEL. (954) 698-6888 FAX. (954) 698-6889

revisions:

no	date	by	description
A	10.13.04		NO CHANGE THIS SHEET

date: 05-25-04
scale: 1/2" = 1"
dr. by: HAMID
chk. by:

drawing no.
W04-43

MULLION LOAD CAPACITY – PSF
WITHOUT INTERMEDIATE HORIZONTALS

NOMINAL DIMS.		WITHOUT REINFORCING	WITH REINFORCING
WIDTH (W)	FRAME HEIGHT	EXT.(+) & INT.(–)	EXT.(+) & INT.(–)
24"	78"	80.0	80.0
30"		80.0	80.0
36"		80.0	80.0
42"		80.0	80.0
48"		80.0	80.0
54"		80.0	80.0
60"		80.0	80.0
66"		80.0	80.0
72"		80.0	80.0
24"	84"	80.0	80.0
30"		80.0	80.0
36"		80.0	80.0
42"		80.0	80.0
48"		80.0	80.0
54"		80.0	80.0
60"		80.0	80.0
66"		80.0	80.0
24"	90"	80.0	80.0
30"		80.0	80.0
36"		80.0	80.0
42"		80.0	80.0
48"		80.0	80.0
54"		80.0	80.0
60"		80.0	80.0
24"	96"	80.0	80.0
30"		80.0	80.0
36"		80.0	80.0
42"		80.0	80.0
48"		80.0	80.0
54"		77.7	80.0
60"		72.2	80.0
24"	102"	–	80.0
30"		–	80.0
36"		–	80.0
42"		–	80.0
48"		–	80.0
54"		–	80.0
24"	108"	–	80.0
30"		–	80.0
36"		–	80.0
42"		–	80.0
48"		–	80.0
24"	114"	–	80.0
30"		–	80.0
36"		–	80.0
42"		–	80.0
48"		–	71.9
24"	120"	–	80.0
30"		–	80.0
36"		–	79.3
42"		–	68.8
48"		–	61.2

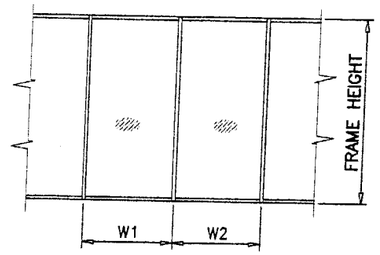

$$\text{WIDTH (W)} = \frac{W1 + W2}{2}$$

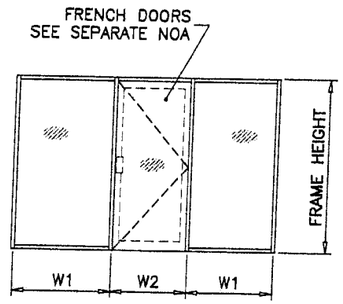

$$\text{WIDTH (W)} = \frac{W1 + W2}{2}$$

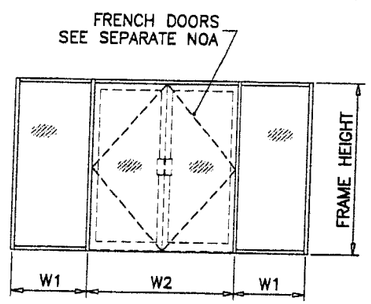

$$\text{WIDTH (W)} = \frac{W1}{2} + \frac{W2}{4}$$

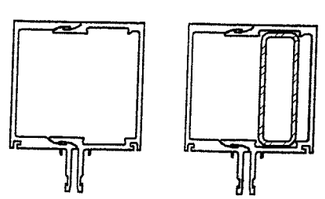

MULLION W/O REINFORCING — MULLION W/ REINFORCING

MULLION LOAD CAPACITY – PSF
WITH INTERMEDIATE HORIZONTALS

NOMINAL DIMS.		WITHOUT REINFORCING	WITH REINFORCING
WIDTH (W)	FRAME HEIGHT	EXT.(+) & INT.(–)	EXT.(+) & INT.(–)
24"	78"	80.0	80.0
30"		80.0	80.0
36"		80.0	80.0
42"		80.0	80.0
48"		80.0	80.0
54"		80.0	80.0
60"		80.0	80.0
66"		80.0	80.0
72"		80.0	80.0
24"	84"	80.0	80.0
30"		80.0	80.0
36"		80.0	80.0
42"		80.0	80.0
48"		80.0	80.0
54"		80.0	80.0
60"		80.0	80.0
66"		80.0	80.0
24"	90"	80.0	80.0
30"		80.0	80.0
36"		80.0	80.0
42"		80.0	80.0
48"		80.0	80.0
54"		80.0	80.0
60"		74.5	80.0
24"	96"	80.0	80.0
30"		80.0	80.0
36"		80.0	80.0
42"		80.0	80.0
48"		76.7	80.0
54"		68.2	80.0
60"		61.4	80.0
24"	102"	–	80.0
30"		–	80.0
36"		–	80.0
42"		–	80.0
48"		–	80.0
54"		–	80.0
24"	108"	–	80.0
30"		–	80.0
36"		–	80.0
42"		–	80.0
48"		–	78.8
24"	114"	–	80.0
30"		–	80.0
36"		–	80.0
42"		–	76.6
48"		–	67.0
24"	120"	–	80.0
30"		–	80.0
36"		–	76.6
42"		–	65.7
48"		–	57.5

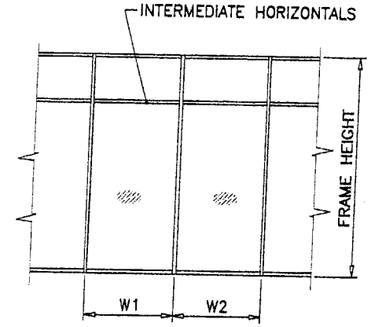

$$\text{WIDTH (W)} = \frac{W1 + W2}{2}$$

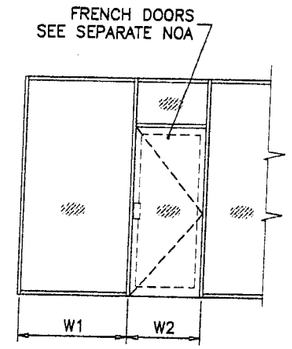

$$\text{WIDTH (W)} = \frac{W1 + W2}{2}$$

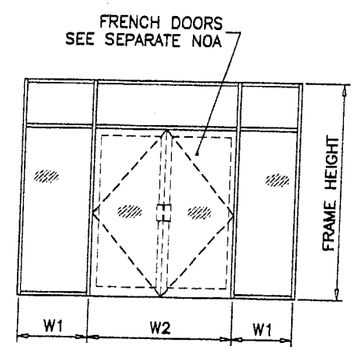

$$\text{WIDTH (W)} = \frac{W1 + W2}{2}$$

Engr: DR. HUMAYOUN FAROOQ
STRUCTURES
FLA. PE # 16557
C.A.N. 3538

OCT 19 2004

Approved as complying with the Florida Buiding Code
Date 11/25/04
NOA# 04-0908.03
Miami-Dade Product Control Division
By

AL-FAROOQ CORPORATION
ENGINEERS, PLANNERS & PRODUCT DESIGN
1235 SW 87 AVE
MIAMI, FLORIDA 33174
TEL. (305) 264-8100 FAX. (305) 262-6978
STORE\W04-43CTC

PRO-TECH 45 ALUM WINDOW WALL SYSTEM (L.M.I.)

CRAWFORD TRACEY CORPORATION
3301 SW 13TH DRIVE
DEERFIELD BEACH, FL. 33442-8101
TEL. (954) 698-6888 FAX. (954) 698-6889

revisions:

no	date	by	description
A	10.13.04		NO CHANGE THIS SHEET

date: 05-25-04
scale:
dr. by: HAMID
chk. by:

drawing no. W04-43

sheet 3 of 9

ANCHOR LOAD CAPACITY – PSF
WITHOUT INTERMEDIATE HORIZONTALS
EXT.(+) & INT.(–)

NOMINAL DIMS.		ANCHORS TYPE 'A'			ANCHORS TYPE 'B'	
WIDTH (W)	FRAME HEIGHT	A2	A3	A4	B1	B2
24"	72"	80.0	80.0	80.0	80.0	80.0
30"		80.0	80.0	80.0	80.0	80.0
36"		80.0	80.0	80.0	80.0	80.0
42"		80.0	80.0	80.0	80.0	80.0
48"		80.0	80.0	80.0	80.0	80.0
54"		80.0	80.0	80.0	80.0	80.0
60"		80.0	80.0	80.0	80.0	80.0
66"		80.0	80.0	80.0	80.0	80.0
72"		80.0	80.0	80.0	80.0	80.0
24"	78"	80.0	80.0	80.0	80.0	80.0
30"		80.0	80.0	80.0	80.0	80.0
36"		80.0	80.0	80.0	80.0	80.0
42"		80.0	80.0	80.0	80.0	80.0
48"		80.0	80.0	80.0	80.0	80.0
54"		80.0	80.0	80.0	80.0	80.0
60"		80.0	80.0	80.0	80.0	80.0
66"		79.1	80.0	80.0	80.0	80.0
72"		77.7	80.0	80.0	80.0	80.0
24"	84"	80.0	80.0	80.0	80.0	80.0
30"		80.0	80.0	80.0	80.0	80.0
36"		80.0	80.0	80.0	80.0	80.0
42"		80.0	80.0	80.0	80.0	80.0
48"		80.0	80.0	80.0	80.0	80.0
54"		76.4	80.0	80.0	80.0	80.0
60"		72.5	80.0	80.0	80.0	80.0
66"		69.8	80.0	80.0	80.0	80.0
24"	90"	80.0	80.0	80.0	80.0	80.0
30"		80.0	80.0	80.0	80.0	80.0
36"		80.0	80.0	80.0	80.0	80.0
42"		80.0	80.0	80.0	80.0	80.0
48"		74.2	80.0	80.0	80.0	80.0
54"		69.1	80.0	80.0	80.0	80.0
60"		65.3	80.0	80.0	80.0	80.0
24"	96"	80.0	80.0	80.0	80.0	80.0
30"		80.0	80.0	80.0	80.0	80.0
36"		80.0	80.0	80.0	80.0	80.0
42"		74.6	80.0	80.0	80.0	80.0
48"		68.0	80.0	80.0	80.0	80.0
54"		63.1	80.0	80.0	80.0	80.0
60"		59.3	80.0	80.0	76.6	80.0
24"	102"	80.0	80.0	80.0	80.0	80.0
30"		80.0	80.0	80.0	80.0	80.0
36"		77.7	80.0	80.0	80.0	80.0
42"		69.1	80.0	80.0	80.0	80.0
48"		62.8	80.0	80.0	80.0	80.0
54"		58.0	80.0	80.0	74.9	80.0

ANCHOR LOAD CAPACITY – PSF
WITHOUT INTERMEDIATE HORIZONTALS
EXT.(+) & INT.(–)

NOMINAL DIMS.		ANCHORS TYPE 'A'			ANCHORS TYPE 'B'	
WIDTH (W)	FRAME HEIGHT	A2	A3	A4	B1	B2
24"	108"	80.0	80.0	80.0	80.0	80.0
30"		80.0	80.0	80.0	80.0	80.0
36"		72.5	80.0	80.0	80.0	80.0
42"		64.3	80.0	80.0	80.0	80.0
48"		58.3	80.0	80.0	75.2	80.0
24"	114"	80.0	80.0	80.0	80.0	80.0
30"		79.1	80.0	80.0	80.0	80.0
36"		68.0	80.0	80.0	80.0	80.0
42"		60.2	80.0	80.0	77.6	80.0
48"		54.4	80.0	80.0	70.2	80.0
24"	120"	80.0	80.0	80.0	80.0	80.0
30"		74.6	80.0	80.0	80.0	80.0
36"		64.0	80.0	80.0	80.0	80.0
42"		56.5	80.0	80.0	72.9	80.0
48"		51.0	76.5	80.0	65.8	80.0

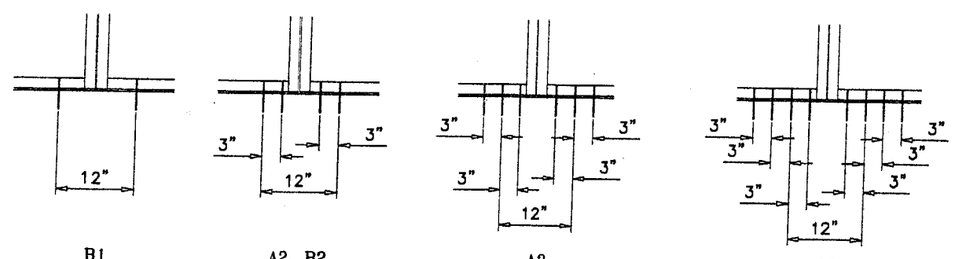

B1 A2, B2. A3 A4

ANCHORS TYPES: SEE SHEET 5 FOR DESCRIPTION

A2 = (2) ANCHORS TYPE 'A' AT EACH SIDE OF MULLION
A3 = (3) ANCHORS TYPE 'A' AT EACH SIDE OF MULLION
A4 = (4) ANCHORS TYPE 'A' AT EACH SIDE OF MULLION

B1 = (1) ANCHOR TYPE 'B' AT EACH SIDE OF MULLION
B2 = (2) ANCHORS TYPE 'B' AT EACH SIDE OF MULLION

ALL OTHER ANCHORS TO BE SPACED AS PER ELEVATION.

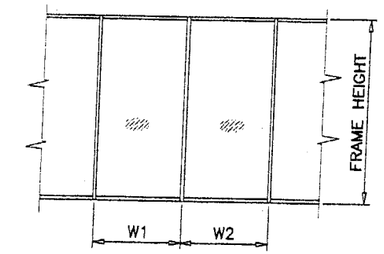

$$\text{WIDTH (W)} = \frac{W1 + W2}{2}$$

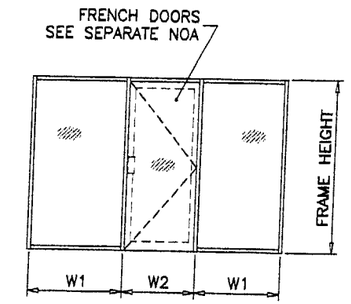

$$\text{WIDTH (W)} = \frac{W1 + W2}{2}$$

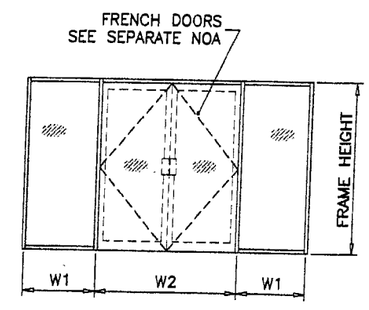

$$\text{WIDTH (W)} = \frac{W1}{2} + \frac{W2}{4}$$

Approved as complying with the Florida Building Code
Date 11/25/04
NOA# 04-0908.03
Miami-Dade Product Control Division
By

Engr: DR. HUMAYOUN FAROOQ
STRUCTURES
FLA. PE # 16557
C.A.N. 3538

OCT 19 2004

AL-FAROOQ CORPORATION
ENGINEERS, PLANNERS & PRODUCT DESIGN
1235 SW 87 AVE
MIAMI, FLORIDA 33174
TEL. (305) 264-8100 FAX. (305) 262-6978
STORE\W04-43CTC

PRO-TECH 45 ALUM WINDOW WALL SYSTEM (L.M.I.)

CRAWFORD TRACEY CORPORATION
3301 SW 13TH DRIVE
DEERFIELD BEACH, FL. 33442-8101
TEL. (954) 698-6888 FAX. (954) 698-6889

revisions:

no	date	by	description
A	10.13.04		NO CHANGE THIS SHEET

date: 05-25-04
scale:
dr. by: HAMID
chk. by:

drawing no.
W04-43

ANCHOR LOAD CAPACITY – PSF
WITH INTERMEDIATE HORIZONTALS
EXT.(+) & INT.(–)

NOMINAL DIMS.		ANCHORS TYPE 'A'			ANCHORS TYPE 'B'	
WIDTH (W)	FRAME HEIGHT	A2	A3	A4	B1	B2
24"	72"	80.0	80.0	80.0	80.0	80.0
30"		80.0	80.0	80.0	80.0	80.0
36"		80.0	80.0	80.0	80.0	80.0
42"		77.7	80.0	80.0	80.0	80.0
48"		68.0	80.0	80.0	80.0	80.0
54"		60.4	80.0	80.0	78.0	80.0
60"		54.4	80.0	80.0	70.2	80.0
66"		49.5	74.2	80.0	63.8	80.0
72"		45.3	68.0	80.0	58.5	80.0
24"	78"	80.0	80.0	80.0	80.0	80.0
30"		80.0	80.0	80.0	80.0	80.0
36"		80.0	80.0	80.0	80.0	80.0
42"		71.7	80.0	80.0	80.0	80.0
48"		62.8	80.0	80.0	80.0	80.0
54"		55.8	80.0	80.0	72.0	80.0
60"		50.2	75.3	80.0	64.8	80.0
66"		45.7	68.5	80.0	58.9	80.0
72"		41.8	62.8	80.0	54.0	80.0
24"	84"	80.0	80.0	80.0	80.0	80.0
30"		80.0	80.0	80.0	80.0	80.0
36"		77.7	80.0	80.0	80.0	80.0
42"		66.6	80.0	80.0	80.0	80.0
48"		58.3	80.0	80.0	75.2	80.0
54"		51.8	77.7	80.0	66.9	80.0
60"		46.6	69.9	80.0	60.2	80.0
66"		42.4	63.6	80.0	54.7	80.0
24"	90"	80.0	80.0	80.0	80.0	80.0
30"		80.0	80.0	80.0	80.0	80.0
36"		72.5	80.0	80.0	80.0	80.0
42"		62.2	80.0	80.0	80.0	80.0
48"		54.4	80.0	80.0	70.2	80.0
54"		48.4	72.5	80.0	62.4	80.0
60"		43.5	65.3	80.0	56.2	80.0
24"	96"	80.0	80.0	80.0	80.0	80.0
30"		80.0	80.0	80.0	80.0	80.0
36"		68.0	80.0	80.0	80.0	80.0
42"		58.3	80.0	80.0	75.2	80.0
48"		51.0	76.5	80.0	65.8	80.0
54"		45.3	68.0	80.0	58.5	80.0
60"		40.8	61.2	80.0	52.7	80.0
24"	102"	80.0	80.0	80.0	80.0	80.0
30"		76.8	80.0	80.0	80.0	80.0
36"		64.0	80.0	80.0	80.0	80.0
42"		54.9	80.0	80.0	70.8	80.0
48"		48.0	72.0	80.0	61.9	80.0
54"		42.7	64.0	80.0	55.1	80.0

ANCHOR LOAD CAPACITY – PSF
WITH INTERMEDIATE HORIZONTALS
EXT.(+) & INT.(–)

NOMINAL DIMS.		ANCHORS TYPE 'A'			ANCHORS TYPE 'B'	
WIDTH (W)	FRAME HEIGHT	A2	A3	A4	B1	B2
24"	108"	80.0	80.0	80.0	80.0	80.0
30"		72.5	80.0	80.0	80.0	80.0
36"		60.4	80.0	80.0	78.0	80.0
42"		51.8	77.7	80.0	66.9	80.0
48"		45.3	68.0	80.0	58.5	80.0
24"	114"	80.0	80.0	80.0	80.0	80.0
30"		68.7	80.0	80.0	80.0	80.0
36"		57.3	80.0	80.0	73.9	80.0
42"		49.1	73.6	80.0	63.3	80.0
48"		42.9	64.4	80.0	55.4	80.0
24"	120"	80.0	80.0	80.0	80.0	80.0
30"		65.3	80.0	80.0	80.0	80.0
36"		54.4	80.0	80.0	70.2	80.0
42"		46.6	69.9	80.0	60.2	80.0
48"		40.8	61.2	80.0	52.7	80.0

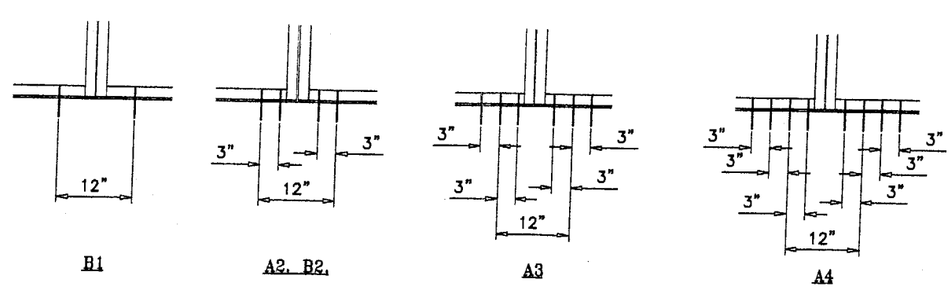

ANCHORS TYPES: SEE SHEET 5 FOR DESCRIPTION

A2 = (2) ANCHORS TYPE 'A' AT EACH SIDE OF MULLION
A3 = (3) ANCHORS TYPE 'A' AT EACH SIDE OF MULLION
A4 = (4) ANCHORS TYPE 'A' AT EACH SIDE OF MULLION

B1 = (1) ANCHOR TYPE 'B' AT EACH SIDE OF MULLION
B2 = (2) ANCHORS TYPE 'B' AT EACH SIDE OF MULLION

ALL OTHER ANCHORS TO BE SPACED AS PER ELEVATION.

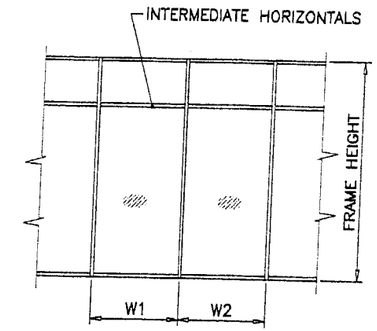

$$\text{WIDTH (W)} = \frac{W1 + W2}{2}$$

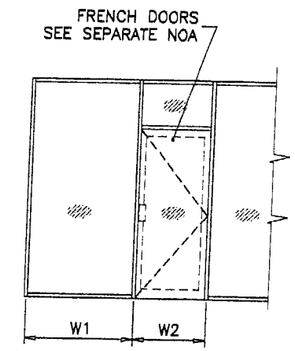

$$\text{WIDTH (W)} = \frac{W1 + W2}{2}$$

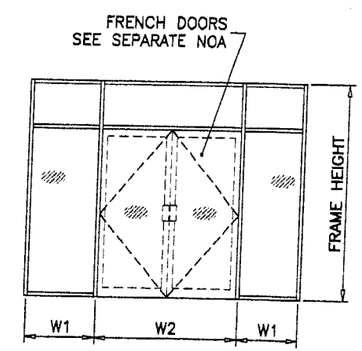

$$\text{WIDTH (W)} = \frac{W1 + W2}{2}$$

Engr: DR. HUMAYOUN FAROOQ
STRUCTURES
FLA. PE # 16557
C.A.N. 3538

OCT 19 2004

Approved as complying with the Florida Building Code
Date 11/25/04
NOA# 04-0908.03
Miami-Dade Product Control Division
By

AL-FAROOQ CORPORATION
ENGINEERS, PLANNERS & PRODUCT DESIGN
1235 SW 87 AVE
MIAMI, FLORIDA 33174
TEL. (305) 264-8100 FAX. (305) 262-6978
STORE\W04-43CTC

PRO-TECH 45 ALUM WINDOW WALL SYSTEM (L.M.I.)

CRAWFORD TRACEY CORPORATION
3301 SW 13TH DRIVE
DEERFIELD BEACH, FL. 33442-8101
TEL. (954) 698-6888 FAX. (954) 698-6889

revisions:

no	date	by	description
A	10.13.04		NO CHANGE THIS SHEET

date: 05-25-04
scale:
dr. by: HAMID
chk. by:

drawing no.
W04-43

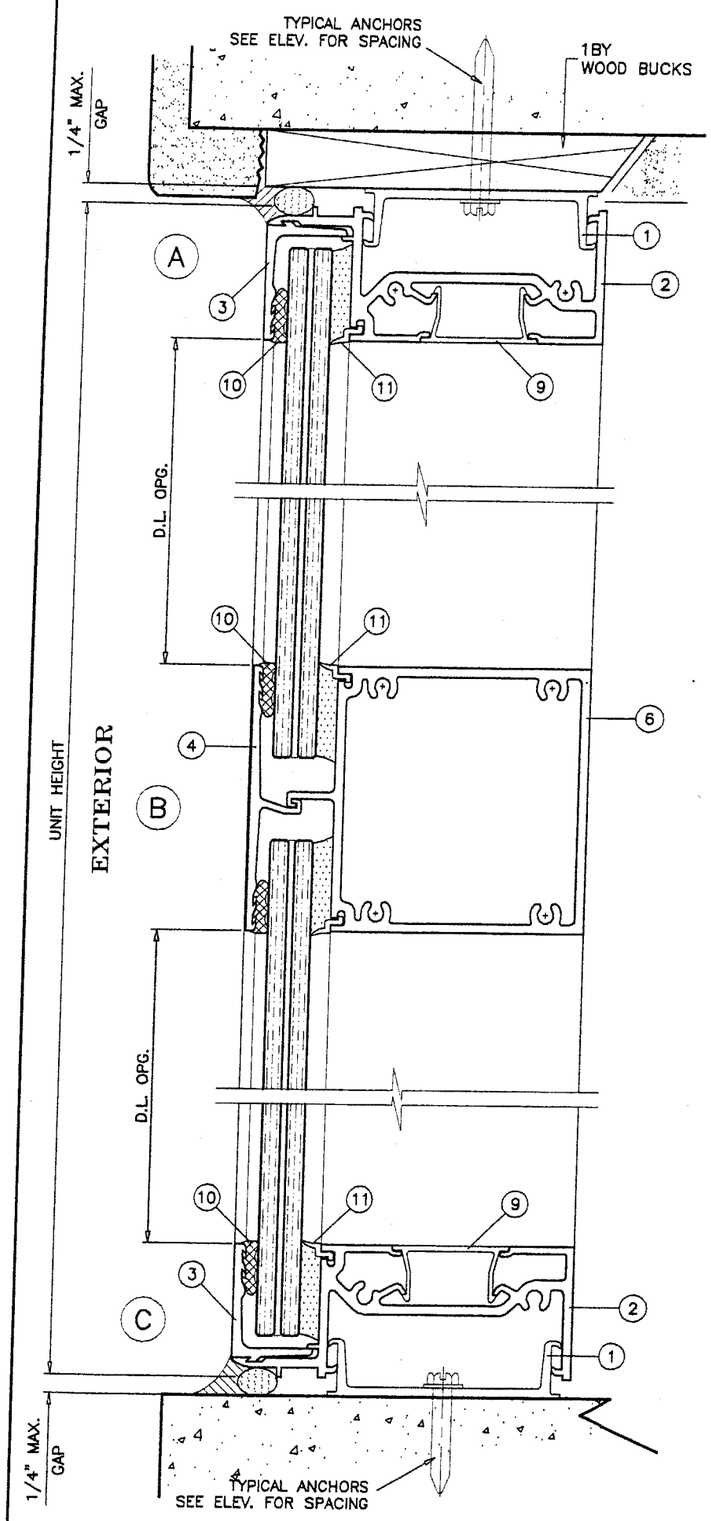

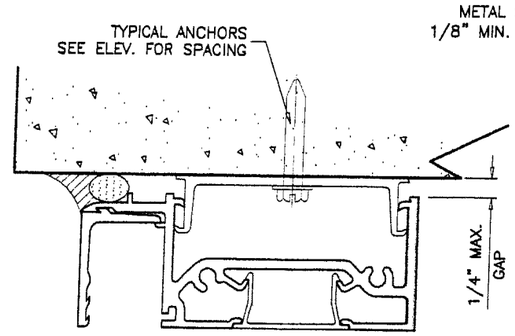

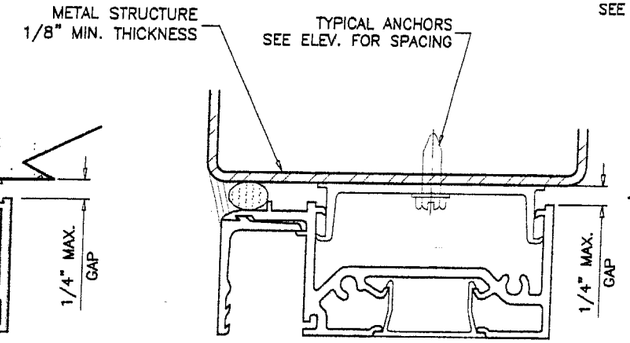

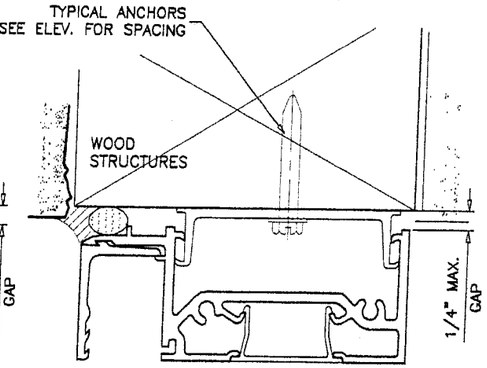

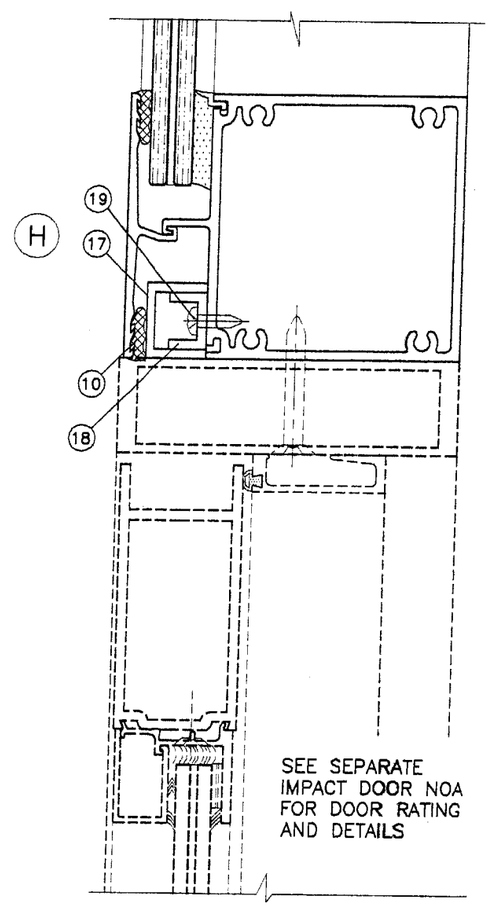

WOOD BUCKS NOT BY CRAWFORD TRACEY, MUST SUPPORT LOADS IMPOSED BY GLAZING SYSTEM AND TRANSFER THEM TO THE BUILDING STRUCTURE.

TYPICAL ANCHORS: SEE ELEV. FOR SPACING

TYPE 'A'– 1/4" TAPCONS
INTO WOOD STRUCTURES
1–1/2" MIN. PENETRATION INTO WOOD

THRU 1BY OR 2BY WOOD BUCKS INTO
3000 PSI MIN. CONC. OR C–90 GROUT FILLED BLOCK
1–1/2" MIN. EMBED INTO CONC. OR MASONRY

TYPE 'B'– 1/4" TAPCONS
DIRECTLY INTO CONC. OR MASONRY
3000 PSI MIN. CONC. OR C–90 GROUT FILLED BLOCK
1–1/4" MIN. EMBED INTO CONC. OR MASONRY

#14 SMS OR 1/4" SELF DRILLING SCREWS
INTO METAL STRUCTURES (STEEL OR ALUMINUM 1/8" MIN. THICK.)
STEEL : Fy = 36 KSI MIN.
ALUMINUM : 6063–T5 MIN.
(STEEL IN CONTACT WITH ALUMINUM TO BE PLATED OR PAINTED)

TYPICAL EDGE DISTANCE
INTO CONCRETE AND MASONRY = 3" MIN.
INTO WOOD STRUCTURE = 1" MIN.

Engr: DR. HUMAYOUN FAROOQ
STRUCTURES
FLA. PE # 16557
C.A.N. 3538

OCT 1 9 2004

Approved as complying with the Florida Buiding Code
Date 11/25/04
NOA# 04-0908.03
Miami-Dade Product Control Division
By

AL–FAROOQ CORPORATION
ENGINEERS, PLANNERS & PRODUCT DESIGN
1235 SW 87 AVE
MIAMI, FLORIDA 33174
TEL. (305) 264–8100 FAX. (305) 262–6978
STORE\W04–43CTC

PRO–TECH 45 ALUM WINDOW WALL SYSTEM (L.M.I.)

CRAWFORD TRACEY CORPORATION
3301 SW 13TH DRIVE
DEERFIELD BEACH, FL. 33442–8101
TEL. (954) 698–6888 FAX. (954) 698–6889

revisions:

no	date	by	description
A	10.13.04		NO CHANGE THIS SHEET

date: 05–25–04
scale: 1/2" = 1"
dr. by: HAMID
chk. by:

drawing no.
W04–43

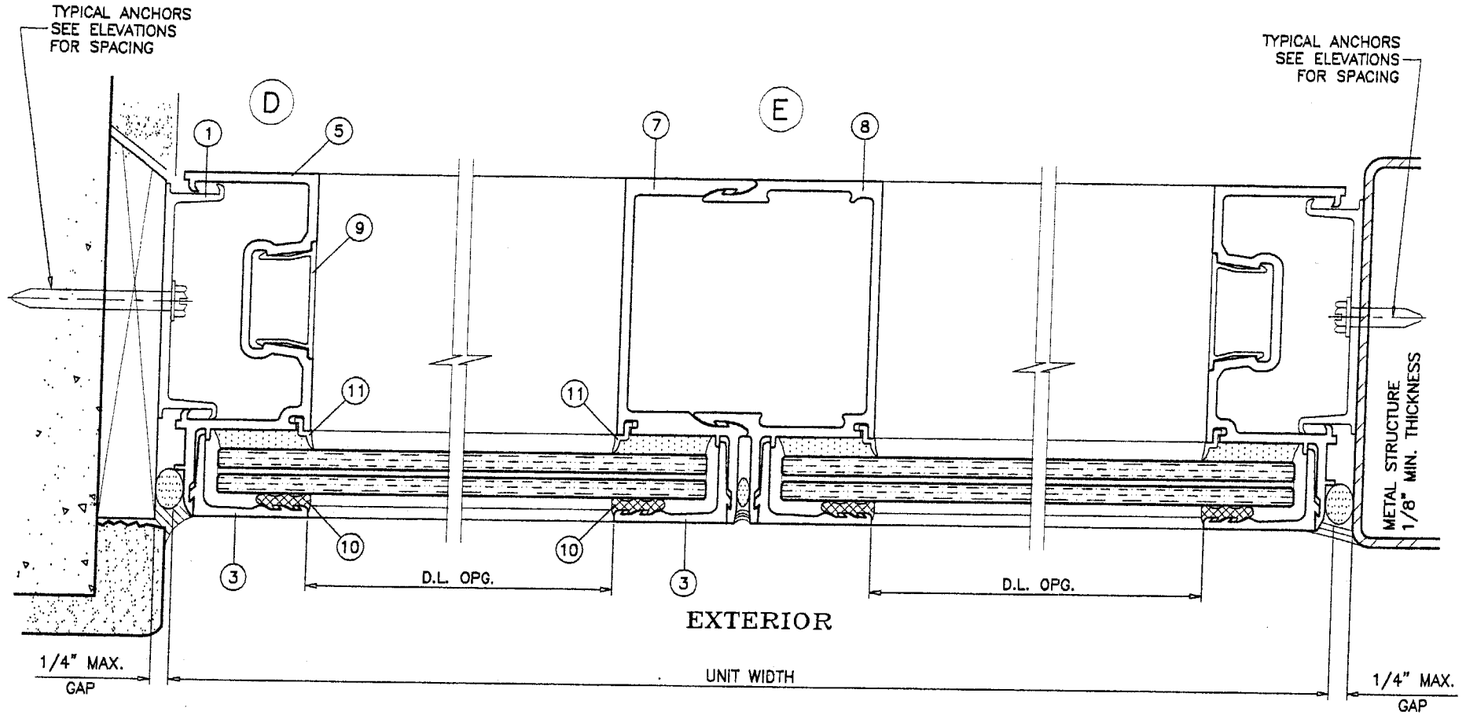

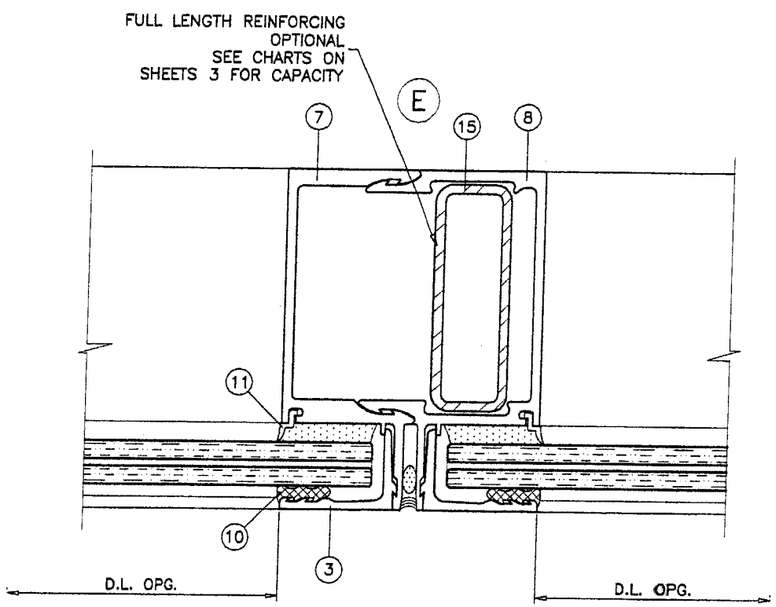

Engr: DR. HUMAYOUN FAROOQ
STRUCTURES
FLA. PE # 16557
C.A.N. 3533

OCT 19 2004

Approved as complying with the
Florida Buiding Code
Date 11/25/04
NOA# 04-0906.03
Miami-Dade Product Control
Division
By

PRO-TECH 45 ALUM WINDOW WALL SYSTEM (L.M.I.)

CRAWFORD TRACEY CORPORATION
3301 SW 13TH DRIVE
DEERFIELD BEACH, FL. 33442-8101
TEL (954) 698-6888 FAX. (954) 698-6889

AL-FAROOQ CORPORATION
ENGINEERS, PLANNERS & PRODUCT DESIGN
1235 SW 87 AVE
MIAMI, FLORIDA 33174
TEL. (305) 264-8100 FAX. (305) 262-6978

STORE\W04-43CTC

revisions:

no	date	by	description
A	10.13.04		NO CHANGE THIS SHEET

date: 05-25-04
scale: 1/2" = 1"
dr. by: HAMID
chk. by:

drawing no.
W04-43

sheet 7 of 9

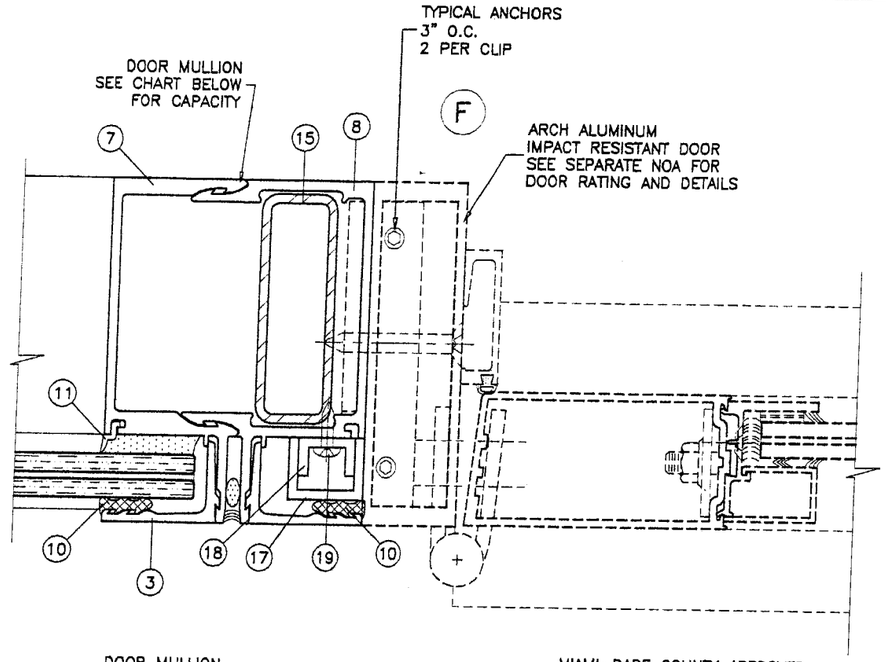

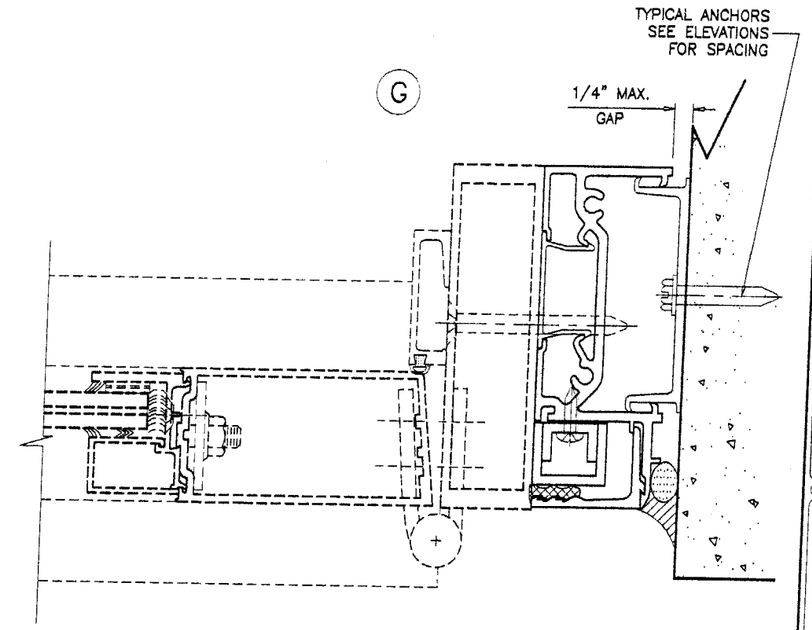

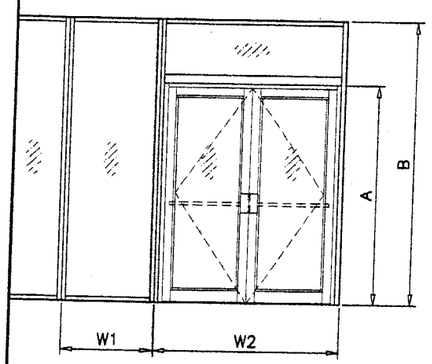

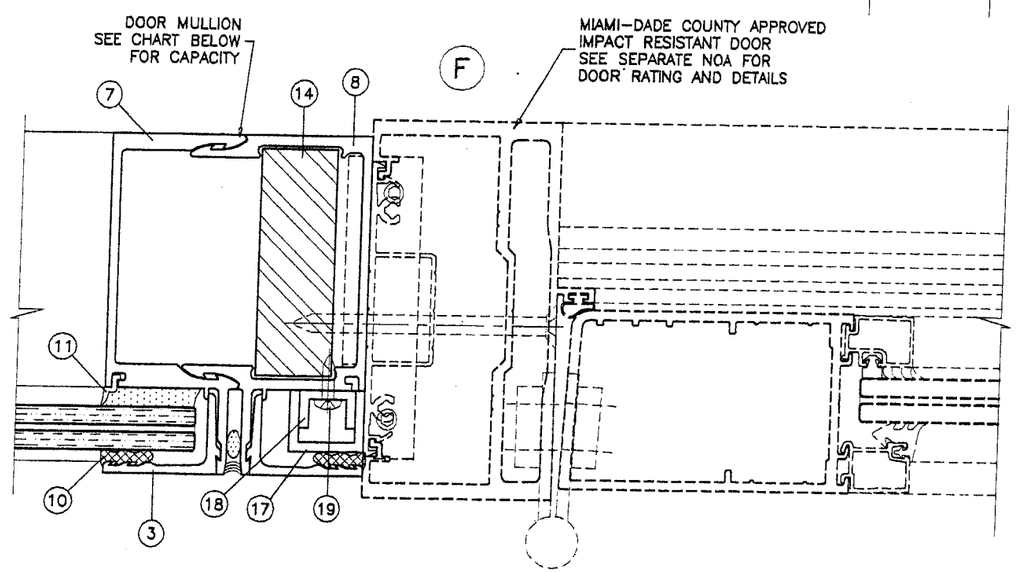

DOOR MULLION DESIGN LOAD CAPACITY - PSF				
FRAME HEIGHT-B INCHES MAX.	DOOR HEIGHT-A INCHES MAX.	WIDTH-W1 INCHES MAX.	WIDTH-W2 INCHES MAX.	EXT. (+) INT. (-)
120	96	36	78	80.0
	90			80.0
	84			77.6
	80			74.5
114	96	40	78	80.0
	80			80.0
108	96	46	78	80.0
	80			80.0
102	96	52	78	80.0
	80			80.0

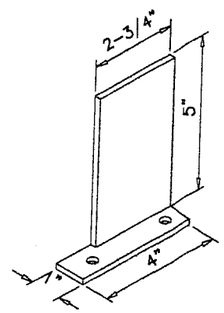

DOOR MULLION INSTALLATION CLIP
1 X 5 X 3/16" ALUM ANGLE

Engr: DR. HUMAYOUN FAROOQ
STRUCTURES
FLA. PE # 16557
C.A.N. 3538

OCT 19 2004

Approved as complying with the Florida Building Code
Date 11/25/04
NOA# 04.0908.03
Miami Dade Product Control Division
By

AL-FAROOQ CORPORATION
ENGINEERS, PLANNERS & PRODUCT DESIGN
1235 SW 87 AVE
MIAMI, FLORIDA 33174
TEL. (305) 264-8100 FAX. (305) 262-6978
STORE\W04-43CTC

PRO-TECH 45 ALUM WINDOW WALL SYSTEM (L.M.I.)

CRAWFORD TRACEY CORPORATION
3301 SW 13TH DRIVE
DEERFIELD BEACH, FL. 33442-8101
TEL. (954) 698-6888 FAX. (954) 698-6889

revisions:

no	date	by	description
A	10.13.04		REV. PER BCCO COMMENTS

date: 05-25-04
scale: 1/2" = 1"
dr. by: HAMID
chk. by:

drawing no.
W04-43

sheet 8 of 9

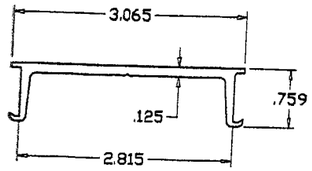

1 SUB BUCK

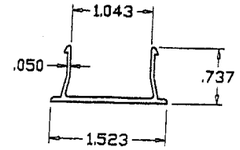

9 SNAP–IN COVER

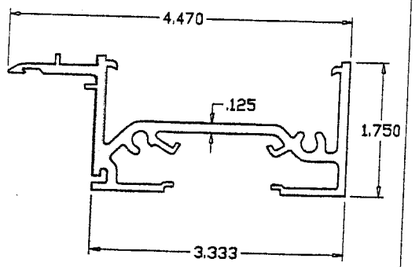

2 FRAME HEAD/SILL

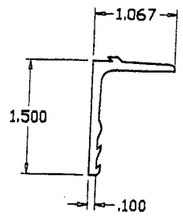

3 GLAZING RETAINER (HEAD/JAMB/SILL)

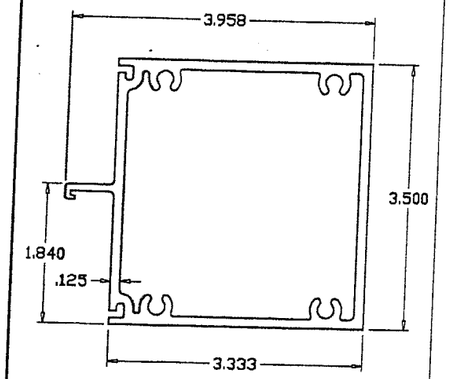

6 FRAME HORIZONTAL

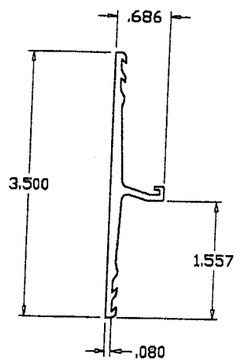

4 GLAZING RETAINER (HORIZONTAL)

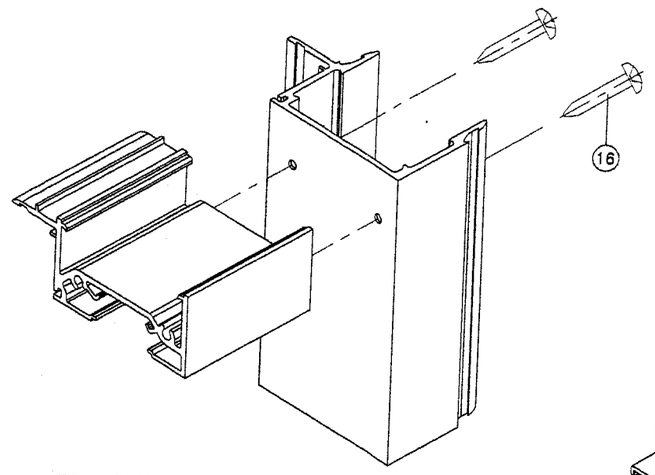

FRAME TOP/BOTTOM CORNER

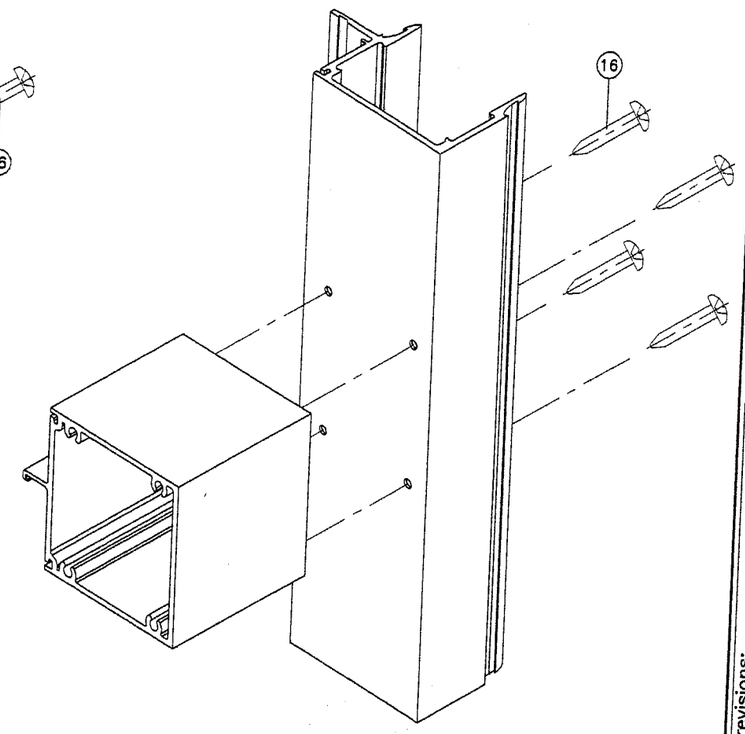

FRAME HORIZONTAL CORNER

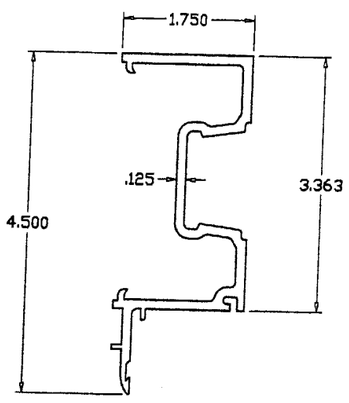

5 FRAME JAMB

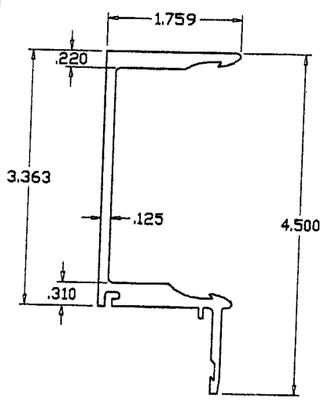

7 FEMALE MULLION

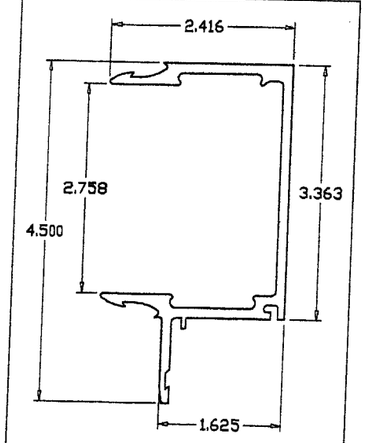

8 MALE MULLION

ITEM NO.	PART NUMBER	QUANTITY	DESCRIPTION	MATERIAL	MANF./SUPPLIER/REMARKS
1	B44B001	AS REQD.	SUB BUCK	6105–T5	–
2	144P175	AS REQD.	FRAME HEAD/SILL	6063–T6	–
3	162F111	AS REQD.	GLAZING RETAINER (HEAD/SILL/JAMB)	6063–T6	–
4	162F340	AS REQD.	GLAZING RETAINER (HORIZONTAL)	6063–T6	–
5	144J175	AS REQD.	FRAME JAMB	6063–T6	–
6	144H301	AS REQD.	HORIZONTAL	6063–T6	–
7	144M112	AS REQD.	FEMALE MULLION	6063–T6	–
8	144M111	AS REQD.	MALE MULLION	6063–T6	–
9	T44U119	AS REQD.	SNAP–IN COVER	6063–T6	–
10	#5	AS REQD.	EXTERIOR GLAZING GASKET	POLYPROPYLENE	–
11	#2	AS REQD.	INTERIOR GLAZING GASKET	POLYPROPYLENE	–
12	–	–	–	–	–
13	983	–	GLAZING COMPOUND	SILICONE	DOW CORNING
14	–	AS REQD.	STEEL BAR, FULL LENGTH	STEEL	1" X 3"
15	–	AS REQD.	REINFORCING TUBE, FULL LENGTH	STEEL	1 X 3 X 11 GA.
16	#14 X 1–1/4"	AS REQD.	FRAME ASSEMBLY SCREWS	ST. STEEL	P.H. SMS
17	–	AS REQD.	FILLER CHANNEL	ALUMINUM	13/16 X 1 X 13/16 X 1/8"
18	–	AS REQD.	FILLER CHANNEL	ALUMINUM	1/2 X 3/4 X 1/2 X 1/8"
19	#10 X 1"	AS REQD.	FILLER CHANNEL SCREWS	AT. STEEL	AT 14" O.C.

Engr: DR. HUMAYOUN FAROOQ
STRUCTURES
FLA. PE # 16557
C.A.N. 3538

OCT 1 9 2004

Approved as complying with the Florida Building Code
Date 11/29/04
NOA# 04-0908.03
Miami-Dade Product Control Division
By

AL–FAROOQ CORPORATION
ENGINEERS, PLANNERS & PRODUCT DESIGN
1235 SW 87 AVE
MIAMI, FLORIDA 33174
TEL. (305) 264–8100 FAX. (305) 262–6978
STORE\W04–43CTC

PRO–TECH 45 ALUM WINDOW WALL SYSTEM (L.M.I.)

CRAWFORD TRACEY CORPORATION
3301 SW 13TH DRIVE
DEERFIELD BEACH, FL. 33442–8101
TEL. (954) 698–6888 FAX. (954) 698–6889

revisions:

no	date	by	description
A	10.13.04		NO CHANGE THIS SHEET

date: 05–25–04
scale: 1/2" = 1"
dr. by: HAMID
chk. by:

drawing no.
W04–43

sheet 9 of 9