MIAMI-DADE

BUILDING CODE COMPLIANCE OFFICE (BCCO)
PRODUCT CONTROL DIVISION

**MIAMI-DADE** COUNTY, FLORIDA
METRO-DADE FLAGLER BUILDING
**140 WEST FLAGLER STREET, SUITE 1603**
MIAMI, FLORIDA 33130-1563
(305) 375-2901 FAX (305) 375-2908

# NOTICE OF ACCEPTANCE (NOA)

**Finestone.**
**3550 St. Johns Bluff Rd South.**
**Jacksonville, FL 32224**

**SCOPE:**

This NOA is being issued under the applicable rules and regulations governing the use of construction materials. The documentation submitted has been reviewed by Miami-Dade County Product Control Division and accepted by the Board of Rules and Appeals (BORA) to be used in Miami Dade County and other areas where allowed by the Authority Having Jurisdiction (AHJ).

This NOA shall not be valid after the expiration date stated below. The Miami-Dade County Product Control Division (In Miami Dade County) and/or the AHJ (in areas other than Miami Dade County) reserve the right to have this product or material tested for quality assurance purposes. If this product or material fails to perform in the accepted manner, the manufacturer will incur the expense of such testing and the AHJ may immediately revoke, modify, or suspend the use of such product or material within their jurisdiction. BORA reserves the right to revoke this acceptance, if it is determined by Miami Dade County Product Control Division that this product or material fails to meet the requirements of the applicable building code.

This product is approved as described herein, and has been designed to comply with the High Velocity Hurricane Zone of the Florida Building Code.

**DESCRIPTION: Finestone Pebbletex EIFS.**

**APPROVAL DOCUMENT:** Drawing No. **ONE**, Sheets 1 through 3 of 3, titled "Finestone Pebbletex EIFS Exterior Insulation and Finish System" dated 05/06/02, with no revision on, prepared by Tilteco, Inc. signed and sealed by W. A. Tillit Jr. PE., bearing the Miami-Dade County Product Control Renewal stamp with the NOA number and expiration date by the Miami-Dade County Product Control Division.

**MISSILE IMPACT RATING: Large and Small Missile.**

**LABELING:** Each component shall bear a permanent label with the manufacturer's name or logo, city, state and following statement: "Miami-Dade County Product Control Approved", unless otherwise noted herein.

**RENEWAL** of this NOA shall be considered after a renewal application has been filed and there has been no change in the applicable building code negatively affecting the performance of this product.

**TERMINATION** of this NOA will occur after the expiration date or if there has been a revision or change in the materials, use, and/or manufacture of the product or process. Misuse of this NOA as an endorsement of any product, for sales, advertising or any other purposes shall automatically terminate this NOA. Failure to comply with any section of this NOA shall be cause for termination and removal of NOA.

**ADVERTISEMENT:** The NOA number preceded by the words Miami-Dade County, Florida, and followed by the expiration date may be displayed in advertising literature. If any portion of the NOA is displayed, then it shall be done in its entirety.

**INSPECTION:** A copy of this entire NOA shall be provided to the user by the manufacturer or its distributors and shall be available for inspection at the job site at the request of the Building Official.

This NOA renews NOA # 02-0516.02 and consists of this page, evidence page as well as the approval document mentioned above.

The submitted documentation was reviewed by **Candido F. Font PE.**

11/11/04

PRODUCT CONTROL ACCEPTED

**NOA No: 04-1001.02**
**Expiration Date: February 6, 2010**
**Approval Date: November 11, 2004**

Finestone.

## NOTICE OF ACCEPTANCE: EVIDENCE SUBMITTED

### A. DRAWINGS

1. Drawing No. **ONE**, Sheets 1 through 3 of 3, titled "Finestone Pebbletex EIFS Exterior Insulation and Finish System" dated 05/06/02, with no revision, prepared by Tilteco, Inc. signed and sealed by W. A. Tillit Jr., PE.

### B. TESTS

1. Test report on Cyclic Load Pressure Test Per PA 203, of "8x8 CMU block wall with Finestone EIFS" prepared by Hurricane Test Laboratory, Inc., report No. 0061-1108-95, specimen 1, 2 & 3, dated 11/14/95, signed and sealed by T. S. Marshall, PE.
2. Test report on Uniform Static Load Test per PA 202 of "8x8 CMU block wall with Finestone EIFS", prepared by Hurricane Test Laboratory, Inc., report No. 0061-1108-95, specimen # 4, dated 11/14/95, signed and sealed by T. S. Marshall, PE.

### C. QUALITY ASSURANCE

1. Building Code Compliance Office.

### D. MATERIAL CERTIFICATIONS

1. Product Control Notice of Acceptance No. 01-1108.09, issued to Apache Products Company on 01/17/02 and expiring on 01/11/2007.

### E. STATEMENTS

1. No change letter prepared by Finestone dated 11/29/01 and signed by E. Auman.
2. No change letter prepared by Degussa Construction Chemical dated 09/28/04 and signed by D. H. Hinton.

11/11/04

**Candido F. Font PE.**
**Sr. Product Control Examiner**
**NOA No: 04-1001.02**
**Expiration Date: February 6, 2010**
**Approval Date: November 11, 2004**

DESCRIPTION: Finestone EIFS a non fire rated exterior insulation and finish system applied over CBS construction comprising the following components:

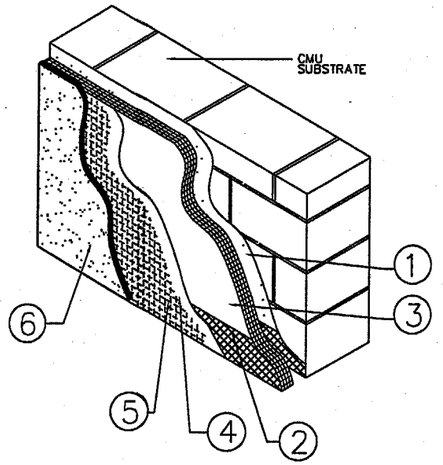


1. ADHESIVE APPLICATION – FINESTONE ADHESIVE/BASE COAT (A/BC). APPLY USING A NOTCHED TROWEL ONTO THE INSULATION BOARD.
2. BACKWRAP INSULATION TERMINATIONS WITH DETAIL MESH SET A MINIMUM OF 2-1/2" ONTO SUBSTRATE AND EXTENDING A MINIMUM OF 2-1/2" ONTO FACE OF INSULATION.
3. INSULATION APPLICATION – APACHE EPS, APPROVED 01-1108.09 INSULATION TO BE A MINIMUM THICKNESS OF 3/4" AND A MINIMUM DENSITY OF 1.0 PCF NOMINAL. BACKWRAP INSULATION TERMINATIONS WITH DETAIL MESH SET A MINIMUM OF 2-1/2" ONTO SUBSTRATE AND EXTENDING A MINIMUM OF 2-1/2" ONTO FACE OF INSULATION. EPS SHALL BE APPLIED HORIZONTALLY IN A RUNNING BOND PATTERN STAGGERING VERTICAL JOINTS AND CORNERS.
4. BASE COAT APPLICATION – APPLY ADHESIVE/BASE COAT (A/BC) USING A FLAT TROWEL ONTO EXPOSED SURFACE OF THE INSULATION BOARD, NOMINAL THICKNESS 1/16"
5. MESH APPLICATION – FINESTONE REINFORCING MESH, 4.5 OZ/SY EMBEDDED INTO WET BASE COAT MIXTURE USING A TROWEL. LAP ALL MESH JOINTS A MINIMUM OF 2-1/2"
6. FINISH APPLICATION – TROWEL APPLY FINESTONE PEBBLETEX FINISH USING A TROWEL TO A NOMIMAL THICKNESS OF 1/16"

# FINESTONE PEBBLETEX SYSTEM

General Notes:

1. This system has been designed in accordance with the Florida Building Code 2001 Edition and its 2002 revisions.
2. This system has been tested in accordance with Miami-Dade County Protocols PA-202 and PA-203 for structural and cyclic testing.
3. This system shall be applied by a licensed plastering contractor following this notice of acceptance, the recommendations of Finestone and the applicable section of the Florida Building Code.
4. The engineer and/or architect of record for each project using this system shall design the block wall to ensure conformance with all governing codes and this document.
5. Insulation boards shall be positioned in a running bond pattern.
6. The block wall surface shall be dry, clean and free of all loose debris prior to placing the system.
7. Details on sheets 2 of 3 and 3 of 3 are typical and show intent to prevent water infiltration into and behind this system. Alternate detailing and specific conditions not covered by the typical details are the responsibility of the licensed design professional in consultation with Finestone.

APPLICATION:

Impact Resistant Substrate
Concrete masonry unit wall per ASTM C-90, type S mortar per ASTM C-270 and designed by the engineer of record according to the requirements of the specific job.

Insulation and Finish System

1. Finestone Adhesive / Base Coat. It is 100% pure acrylic-based material that is mixed at the time of use (1:1 by weight) with Portland cement. When the Portland cement is added, the A/BC takes on a creamy consistency for smooth easy troweling. Up to 30 ounces of water for half a pail (60 lb. per pail)can be added to adjust workability.

2. Finestone Detail Mesh. A white color open mesh weave of glass fiber weighing 4.5 oz/sq. yd. rolls of 150'. The detail mesh is adhesively fastened to the exterior perimeter of the CMU block wall using A/BC. Care shall be taken to ensure that the mesh overlaps the substrate by a minimum 2-1/2 in. and is backwrapped by a minimum 2-1/2 in. over the Apache insulation. The A/BC mixture shall be stirred to a creamy consistency and used to full adhere the mesh to the surface.

3. Apache Molded Expanded Polystyrene. As approved under NOA #01-1108.09 2' x 4' sheets 3/4" thick and a nominal density of 1.0 pcf (16 kg/m. sq.) meeting the requirements of ASTM C-578 Type 1 for thermal insulation boards. The insulotion is applied using a ribbon and dab method. A 2" wide by 3/8" high ribbon of A/BC mixture is applied around the perimeter of each board, and 8 dabs of A/BC 4" in diameter by 3/8" high spoced ot approimately 8" are applied to the field of the boord.

The boards ore pressured ogainst the wall with the long edge oriented horizontally and the vertical joints staggered in successive course to provide a running band pattern. Once the entire black wall is covered by insulation the excess detail mesh was 2-1/2" backwrapped with A/BC. The adhered insulation shall be allowed to remain undisturbed for 24 hours. After this period the insulation is leveled of any irregularities using a rasp and sanded flat.

4. Finestone Reinforcing Mesh. A red color open weave of glass fiber weighing a minimum 4.5 az/sq. yd. in rolls of 48" wide x 150" long. A/BC is applied to the insulation exposed surface in a minimum thickness of 1/16" to receive the reinforcing mesh which is embedded into the wet A/BC mixture. The surface is smoothed using a trowel until the mesh is not visible and the entire surface is covered. The mesh shall lap a minimum of 2-1/2" on all sides and a minimum of 12 hours of curing time is necessary.

5. Finestone Pebbletex Finish. An acrylic based textured wall coating that is 100% pure acrylic polymer base factory mixed, integrally pigmented and formulated for specific textures. The finish is applied to the wall at approximately 1/16" thickness using a stainless steel plastering trowel. After finishing the system shall be allowed to cure for 28 days to gain full strength.

PRODUCT RENEWED
as complying with the Florida Building Code
Acceptance No. 04-1001.02
Expiration Date 02/06/10
By
Miami Dade Product Control Division

| |
|---|
| Design Pressure Rating -75 PSF |
| INSTALLED OVER AN IMPACT RESISTANT SUBSTRATE |

For Engineers Use: STRUCTURALLY REVIEWED BY:
5/9/02
WALTER A. TILLIT JR., P.E.
STRUCTURAL ENGINEER
FL. LIC.NO. 44167
TILTECO INC.
TILLIT TESTING & ENGINEERING COMPANY
8595 NW 36th STREET, STE. 217
MIAMI, FLORIDA 33166

For Product Control Use:
PRODUCT REVISED
as complying with the Florida Building Code
Acceptance No. 02-0516.02
Expiration Date 02/06/05
By
Miami Dade Product Control Division

Finestone
3550 St. Johns Bluff Rd South
Jacksonville, FL 32224

Finestone Pebbletex EIFS
Exterior Insulation and Finish System

| Drawing Number: | Sheet Number: | Revision Date: | Drawing Date: |
|---|---|---|---|
| ONE | 1/3 | | 5/6/02 |

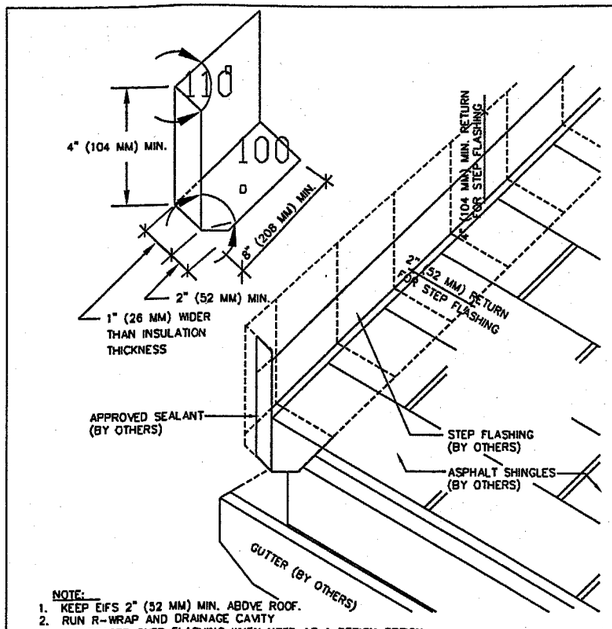


NOTE:
1. KEEP EIFS 2" (52 MM) MIN. ABOVE ROOF.
2. RUN R-WRAP AND DRAINAGE CAVITY OR SPACER OVER FLASHING WHEN USED AS A DESIGN OPTION
3. VERIFY THAT ROOFING IS PROPERLY INSTALLED WITH FELT UNDERLAYMENT TURNED UP ONTO WALL AND STEP FLASHING PROPERLY INSTALLED

TYPICAL ROOF KICK-OUT FLASHING DETAIL

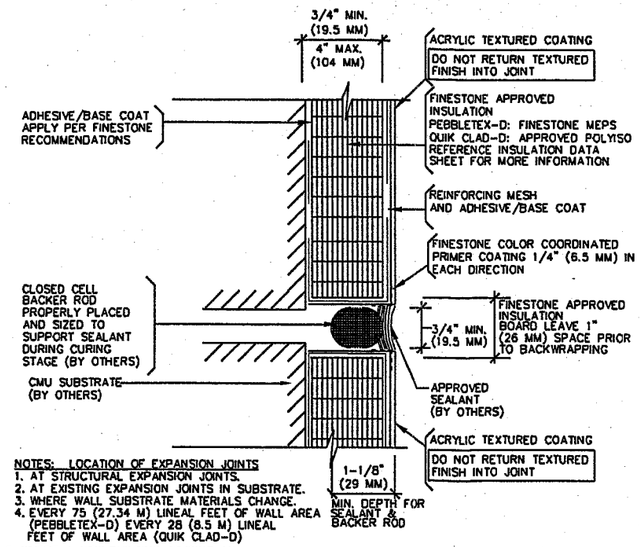


NOTES: LOCATION OF EXPANSION JOINTS
1. AT STRUCTURAL EXPANSION JOINTS.
2. AT EXISTING EXPANSION JOINTS IN SUBSTRATE.
3. WHERE WALL SUBSTRATE MATERIALS CHANGE.
4. EVERY 75 (27.34 M) LINEAL FEET OF WALL AREA (PEBBLETEX-D) EVERY 28 (8.5 M) LINEAL FEET OF WALL AREA (QUIK CLAD-D)
5. WHERE A NEW BUILDING ADJOINS AN EXISTING BUILDING.
6. AT WOOD FRAME CONSTRUCTION PLATFORM FRAMING - PROVIDE HORIZONTAL EXPANSION JOINT AT FLOOR LINE. (SEE STANDARD DETAIL)
7. *RULE OF THUMB: PROVIDE AN EXPANSION JOINT WHENEVER STRUCTURAL MOVEMENT IS ANTICIPATED. COORDINATE SIZE WITH ARCHITECT AND SEALANT MANUFACTURER.*

SEALANT RULE OF THUMB FOR JOINTS 1/2" (13 MM) TO 2" (52 MM) WIDE. DEPTH OF SEALANT 1/2" (13 MM) MAX. (VERIFY WITH SEALANT MANUFACTURER'S REQUIREMENTS)

TYPICAL EXPANSION JOINT DETAIL

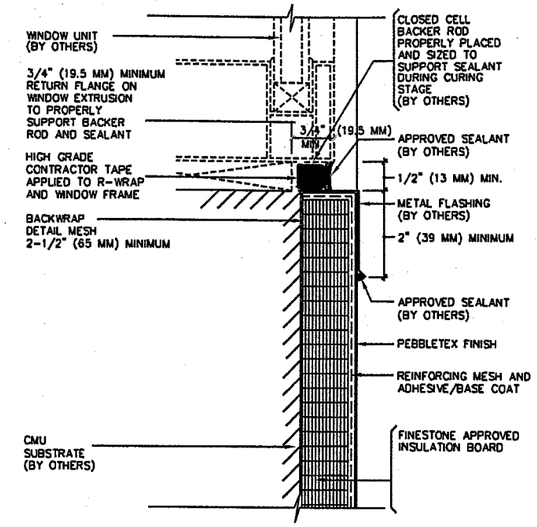


* EIFS TERMINATION DETAIL SIMILAR FOR EXTRUDED VINYL OR ALUMINUM / VINYL CLAD WOOD WINDOWS

TYPICAL ALUMINUM WINDOW SILL DETAIL

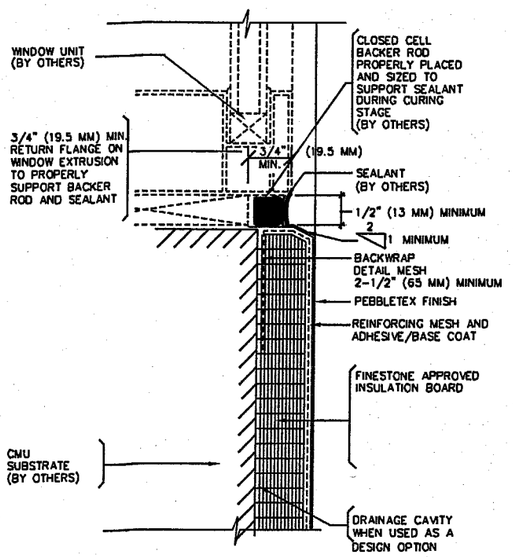


* EIFS TERMINATION DETAIL SIMILAR FOR EXTRUDED VINYL OR ALUMINUM / VINYL CLAD WOOD WINDOWS

TYPICAL ALUMINUM WINDOW SILL DETAIL
ALTERNATE

FINESTONE PEBBLETEX EIF SYSTEM TYPICAL DETAILS

*ALL ROOFING DETAILS SHALL CONFORM WITH CHAPTER 15 OF THE F.B.C.*

PRODUCT RENEWED
as complying with the Florida Building Code
Acceptance No. 04-1001.02
Expiration Date 02/06/10
By
Miami-Dade Product Control Division

For Engineers Use: STRUCTURALLY REVIEWED BY:

5/9/02

WALTER A. TILLIT JR., P.E.
STRUCTURAL ENGINEER
FL. LIC.NO. 44167

TILLECO INC.
TILLIT TESTING & ENGINEERING COMPANY
6595 NW 36TH STREET, STE. 217
MIAMI, FLORIDA 33166

For Product Control Use:

PRODUCT REVISED
as complying with the Florida Building Code
Acceptance No. 02-0516.02
Expiration Date 02/06/05
By
Miami-Dade Product Control Division

Finestone
3550 St. Johns Bluff Rd. South
Jacksonville, FL 32224

Finestone Pebbletex EIFS
Exterior Insulation and Finish System

| Drawing Number: | Sheet Number: | Revision Date: | Drawing Date: |
|---|---|---|---|
| ONE | 2/3 | | 5/6/02 |

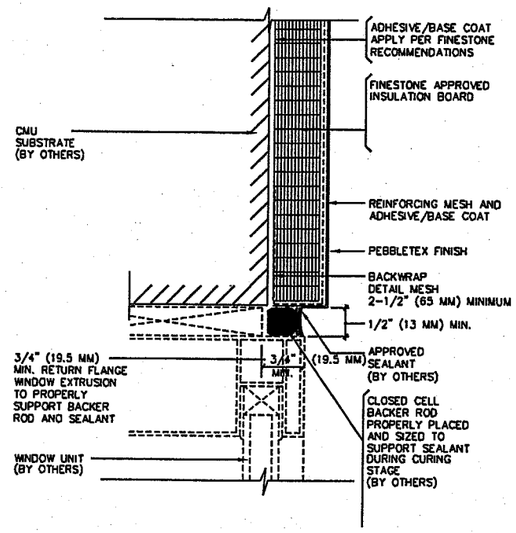


* EIFS TERMINATION DETAIL SIMILAR FOR EXTRUDED VINYL OR ALUMINUM / VINYL CLAD WOOD WINDOWS

TYPICAL ALUMINUM WINDOW HEAD AND JAMB DETAL

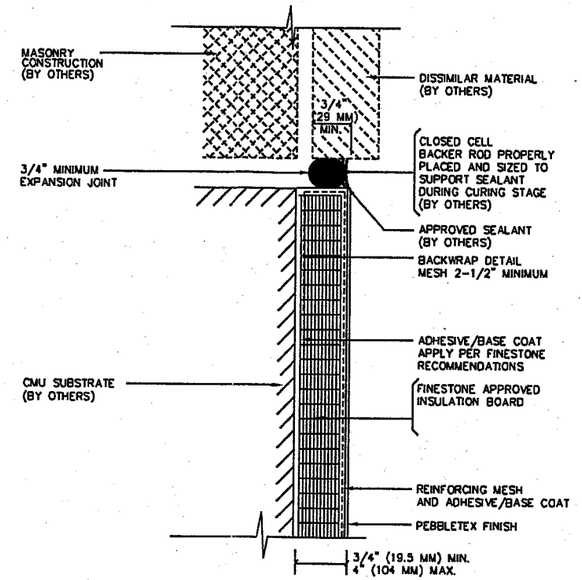


TYPICAL DETAIL ABUTTING DISSIMILAR MATERIAL

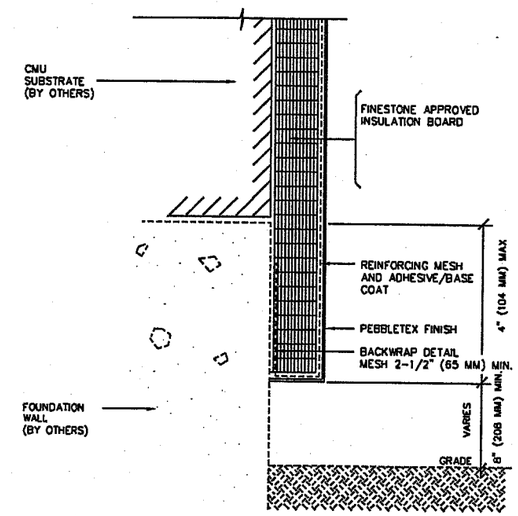


TYPICAL FOUNDATION TERMINATION

PRODUCT RENEWED
as complying with the Florida Building Code
Acceptance No. 04-1001.02
Expiration Date 02/06/10
By
Miami Dade Product Control Division

FINESTONE PEBBLETEX EIF SYSTEM TYPICAL DETAILS

*ALL ROOFING DETAILS SHALL CONFORM WITH CHAPTER 15 OF THE F.B.C.*

For Engineers Use: STRUCTURALLY REVIEWED BY:

5/9/02

WALTER A. TILLIT JR., P.E.
STRUCTURAL ENGINEER
FL. LIC.NO. 44167

TILTECO INC.
TILLIT TESTING & ENGINEERING COMPANY
6595 NW 36th STREET, STE. 217
MIAMI, FLORIDA 33166

For Product Control Use:

PRODUCT REVISED
as complying with the Florida Building Code
Acceptance No. 02-0516.02
Expiration Date 02/06/05
By
Miami Dade Product Control Division

Finestone
3550 St. Johns Bluff Rd. South
Jacksonville, FL 32224

Finestone Pebbletex EIFS
Exterior Insulation and Finish System

| Drawing Number: | Sheet Number: | Revision Date: | Drawing Date: |
|---|---|---|---|
| ONE | 3/3 | | 5/6/02 |