MIAMI-DADE

BUILDING CODE COMPLIANCE OFFICE (BCCO)
PRODUCT CONTROL DIVISION

MIAMI-DADE COUNTY, FLORIDA
METRO-DADE FLAGLER BUILDING
140 WEST FLAGLER STREET, SUITE 1603
MIAMI, FLORIDA 33130-1563
(305) 375-2901 FAX (305) 375-2908

NOTICE OF ACCEPTANCE (NOA)

Gamma USA
15407 West Dixie Highway
North Miami Beach, FL 33162

SCOPE:

This NOA is being issued under the applicable rules and regulations governing the use of construction materials. The documentation submitted has been reviewed by Miami-Dade County Product Control Division and accepted by the Board of Rules and Appeals (BORA) to be used in Miami Dade County and other areas where allowed by the Authority Having Jurisdiction (AHJ).

This NOA shall not be valid after the expiration date stated below. The Miami-Dade County Product Control Division (In Miami Dade County) and/or the AHJ (in areas other than Miami Dade County) reserve the right to have this product or material tested for quality assurance purposes. If this product or material fails to perform in the accepted manner, the manufacturer will incur the expense of such testing and the AHJ may immediately revoke, modify, or suspend the use of such product or material within their jurisdiction. BORA reserves the right to revoke this acceptance, if it is determined by Miami-Dade County Product Control Division that this product or material fails to meet the requirements of the applicable building code.

This product is approved as described herein, and has been designed to comply with the Florida Building Code, including the High Velocity Hurricane Zone.

DESCRIPTION: Series 50.4A Aluminum Window Wall System

APPROVAL DOCUMENT: Drawing No. **T-50.4A,** titled "Test # 50.4A Window Wall 50" x 108" +115/-115 PSF Small Impact Elevation", sheets 1 through 8 of 8, dated 06/03/04 with revision **"R1"** dated 06/29/04, prepared by manufacture, signed and sealed by Farrokh Rasekhi, P.E., bearing the Miami-Dade County Product Control approval stamp with the Notice of Acceptance number and approval date by the Miami-Dade County Product Control Division.

MISSILE IMPACT RATING: Small Missile Impact

LABELING: Each unit shall bear a permanent label with the manufacturer's name or logo, city, state and following statement: "Miami-Dade County Product Control Approved", unless otherwise noted herein.

RENEWAL of this NOA shall be considered after a renewal application has been filed and there has been no change in the applicable building code negatively affecting the performance of this product.

TERMINATION of this NOA will occur after the expiration date or if there has been a revision or change in the materials, use, and/or manufacture of the product or process. Misuse of this NOA as an endorsement of any product, for sales, advertising or any other purposes shall automatically terminate this NOA. Failure to comply with any section of this NOA shall be cause for termination and removal of NOA.

ADVERTISEMENT: The NOA number preceded by the words Miami-Dade County, Florida, and followed by the expiration date may be displayed in advertising literature. If any portion of the NOA is displayed, then it shall be done in its entirety.

INSPECTION: A copy of this entire NOA shall be provided to the user by the manufacturer or its distributors and shall be available for inspection at the job site at the request of the Building Official.
This NOA consists of this page 1 and evidence pages E-19 , as well as approval document mentioned above
The submitted documentation was reviewed by **Herminio F. Gonzalez, P.E., Director, BCCO**

10/26/04

PRODUCT CONTROL ACCEPTED

Gamma U.S.A., Inc.

NOTICE OF ACCEPTANCE: EVIDENCE SUBMITTED

A. DRAWINGS

1. Manufacturer's die drawings and sections.
2. Drawing No. **T-50.4A,** titled "Test # 50.4A 50" x 108" +115/-115 PSF Small Impact Elevation", sheets 1 through 8 of 8, prepared by manufacture, dated 06/03/04, with revision **"R1"** dated 06/29/04, signed and sealed by Farrokh Rasekhi, P.E.

B. TESTS

1. Test reports on 1) Air Infiltration Test, per FBC, TAS 202-94
   2) Uniform Static Air Pressure Test, Loading per FBC, TAS 202-94
   3) Water Resistance Test, per FBC, TAS 202-94
   4) Small Missile Impact Test per FBC, TAS 201-94
   5) Cyclic Wind Pressure Loading per FBC, TAS 203-94

   along with marked-up drawings and installation diagram of an aluminum window wall system, prepared by Fenestration Testing Laboratory, Inc., Test Report No. **FTL-4244**, dated 05/06/04, signed and sealed by Edmundo Largespada, P.E.

C. CALCULATIONS

1. Anchor Calculations, ASTM-E 1300, and structural analysis, prepared by Structural Design, Inc., dated 08/27/04, signed and sealed by Farrokh Rasekhi, P.E.

D. QUALITY ASSURANCE

1. Miami Dade Building Code Compliance Office (BCCO).

E. MATERIAL CERTIFICATIONS

1. Notice of Acceptance No. **01-0205.02** issued to Solutia, Inc. for "Saflex/Keepsafe Maximum" dated 05/17/01, expiring on 05/21/06.

F. STATEMENTS

1. Statement letter of conformance, dated August 24, 2004, signed by Farrokh Rasekhi, P.E.
2. Statement letter of no financial interest, dated August 24, 2004, signed by Farrokh Rasekhi, P.E.

G. OTHER

1. Letter from the consultant stating that the product is in compliance with the Florida Building Code (Code).

Herminio F. Gonzalez, P.E
Director, Building Code Compliance Office
NOA No 04-1006.01
Expiration Date: November18, 2009
Approval Date: November 18, 2004

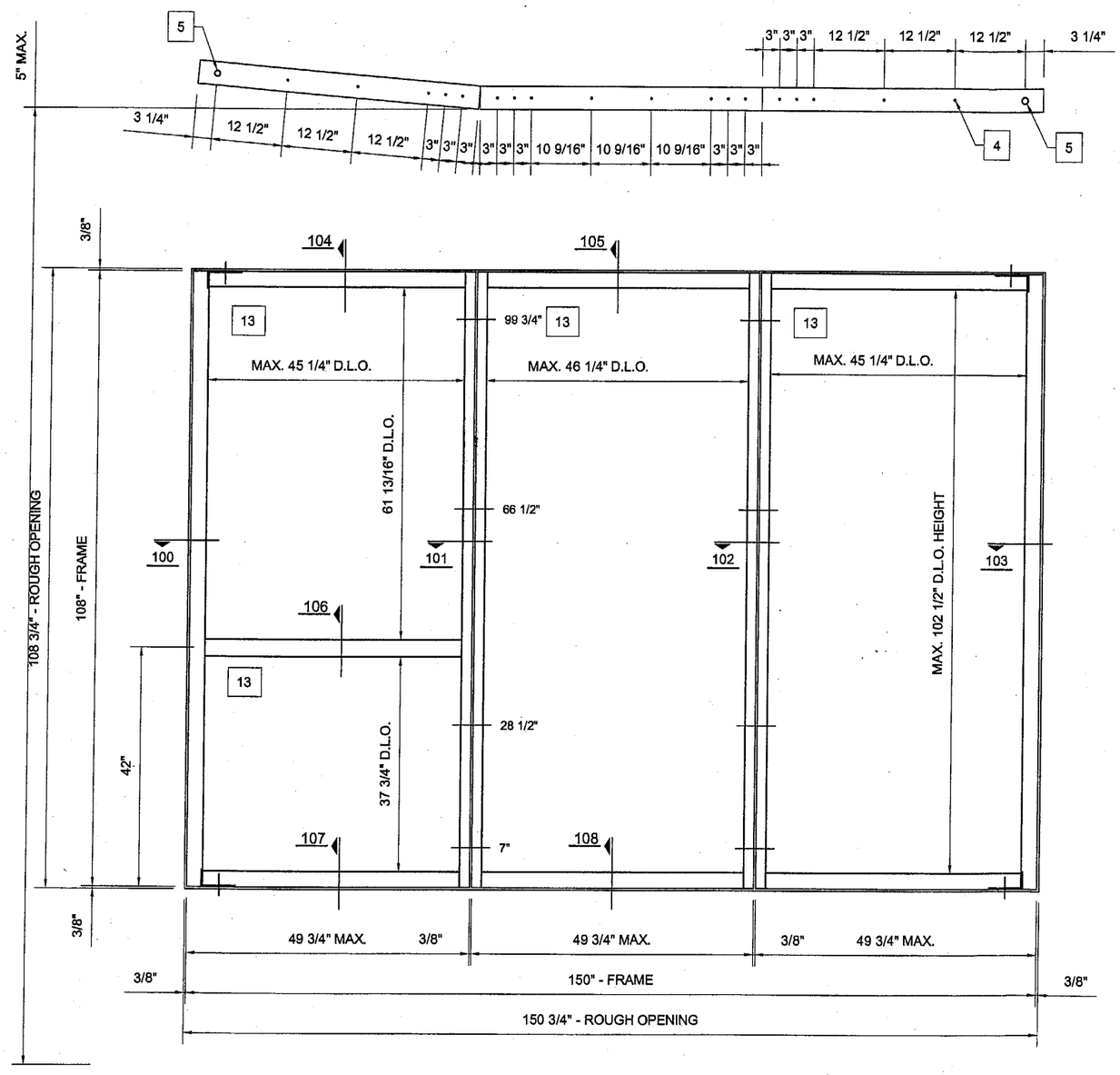

GENERAL NOTES

13 -GLASS TYPE: 9/16" LAMINATED GLASS
1/4" CLEAR TEMPERED GLASS
0.060" SAFLEX/KEEPSAFE PVB (SOLUTIA)
1/4" CLEAR TEMPERED GLASS, LAMINATED BY VITRERIE APRIL.
-MAXIMUM GLASS DIMENSION 47 3/4" X 104"
-ALL ALUMINUM IS 6063 T6
-GLAZING PENETRATION: 3/4"

-3/8" MAX. SHIM SPACE
-CONCRETE APPLICATION 3000 PSI
-FRAME CORNERS SEAM SEALED WITH CLEAR SEALANT
-REFER TO BILL OF MATERIEL FOR COMPLETE DESCRIPTION

SHUTTER REQUIREMENTS:
1- INSTALLATION OF THIS UNIT ABOVE 30 FT ABOVE GRADE WILL NOT REQUIRE SHUTTERS
2- MIAMI DADE COUNTY APPROVED SHUTTERS WILL BE REQUIRED FOR INSTALLATION OF THIS UNIT BELOW 30 FT ABOVE THE GRADE

Approved as complying with the Florida Building Code
Date 11/18/04
NOA# 04-1006.01
Miami-Dade Product Control Division
By

REVISIONS:	BY:
R1 06/29/2004	M.P.

8/31/04
Farrokh Rasekhi, P.E.
Consulting Struct. Engineer
Structural Design, Inc.
FL. Registration #38001

MANUFACTURER:

Gamma
Gamma Industrie Inc.
15407 West Dixie Highway
North Miami Beach, FL 33162
Phone: (305) 957-7004 Fax: (305) 957-7006
Web site: www.gamma-online.com
Email: tech@gamma-online.com

TITLE:

TEST # 50.4A
WINDOW WALL
50" X 108"
+115/-115 PSF
SMALL IMPACT
ELEVATION

SCALE:	DRAWN BY:	
1/2" = 1'-0"	T.DESFORGES	
DATE:	DRAWING NO.	SHEET NO.
06-03-2004	T-50.4A	1 OF 8

Licence RBQ 1159-5527-22

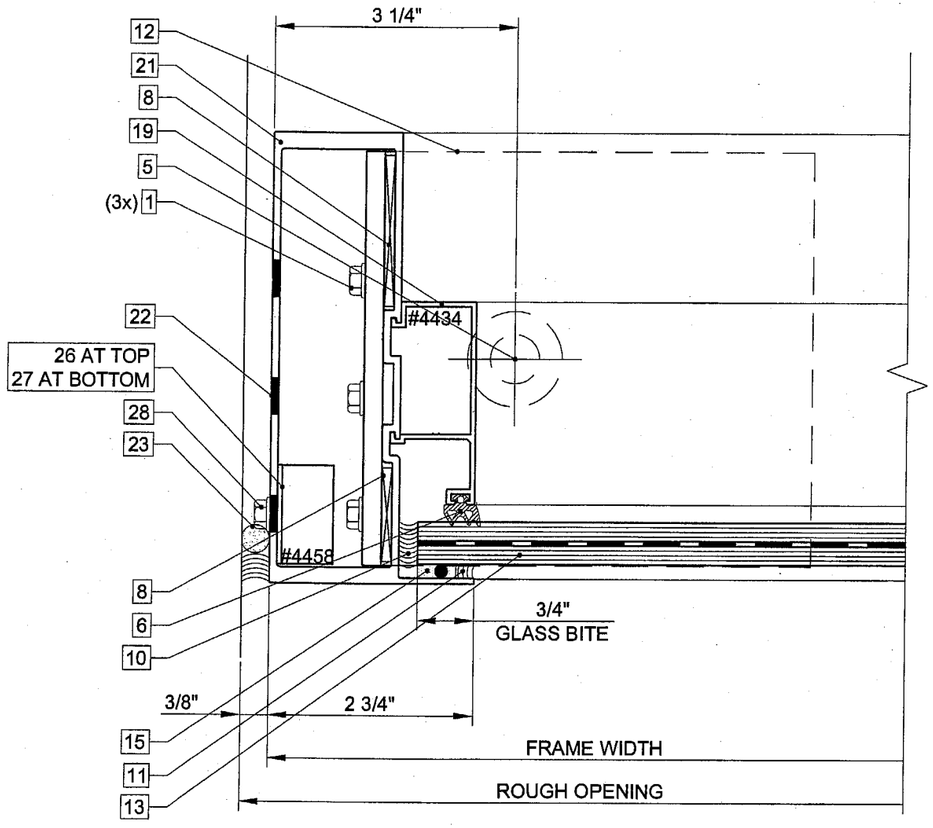

OUTSIDE

detail 100

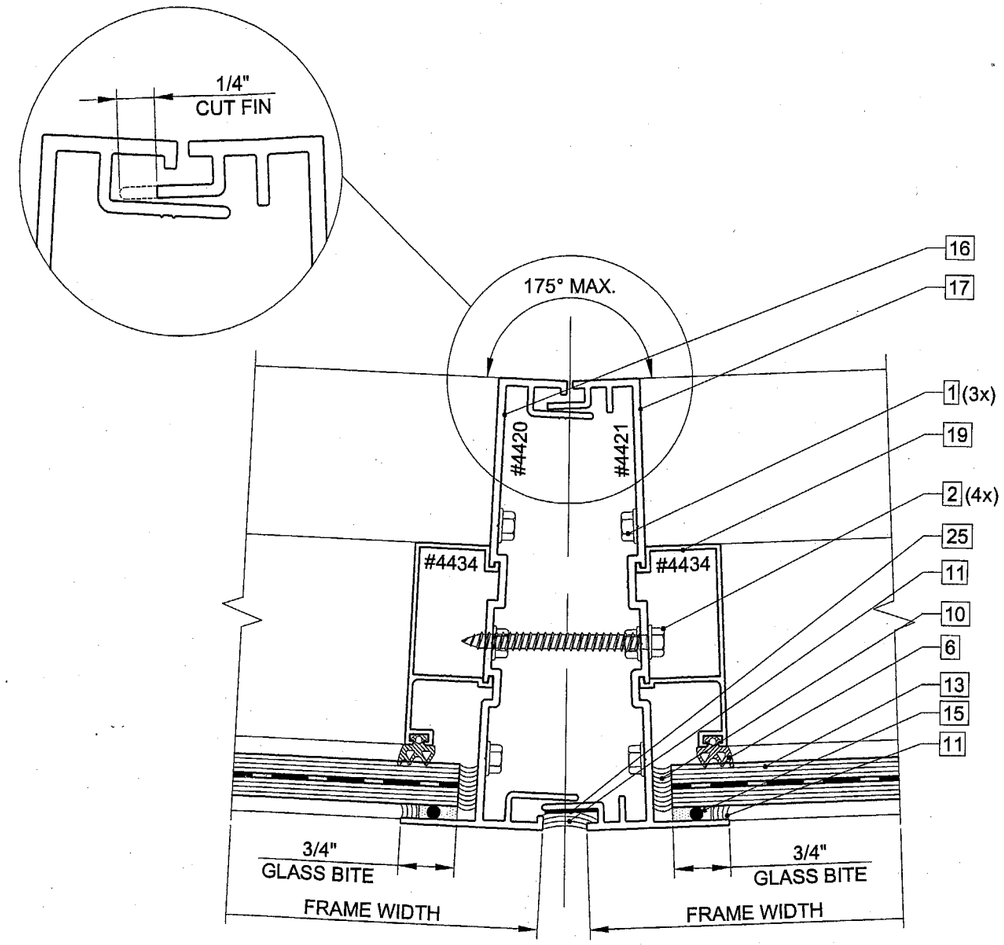

OUTSIDE

detail 101

Approved as complying with the Florida Building Code
Date 11/18/04
NOA# 04-1006.01
Miami-Dade Product Control Division
By

REVISIONS:	BY:
R2 07/009/2004	T.D.

8/31/04
Farrokh Rasekhi, P.E.
Consulting Struct. Engineer
Structural Design, Inc.
FL. Registration #38001

MANUFACTURER:

Gamma

Gamma Industrie Inc.
15407 West Dixie Highway
North Miami Beach, FL 33162
Phone: (305) 957-7004 Fax: (305) 957-7006
Web site: www.gamma-online.com
Email: tech@gamma-online.com

TITLE:

TEST # 50.4A
WINDOW WALL
50" X 108"
+115/-115 PSF
SMALL IMPACT
DETAILS 100 & 101

SCALE:	DRAWN BY:	
6" = 1'-0"	T.DESFORGES	
DATE:	DRAWING NO.	SHEET NO.
06/03/2004	T-50.4A	2 OF 8

Licence RBQ 1159-5527-22

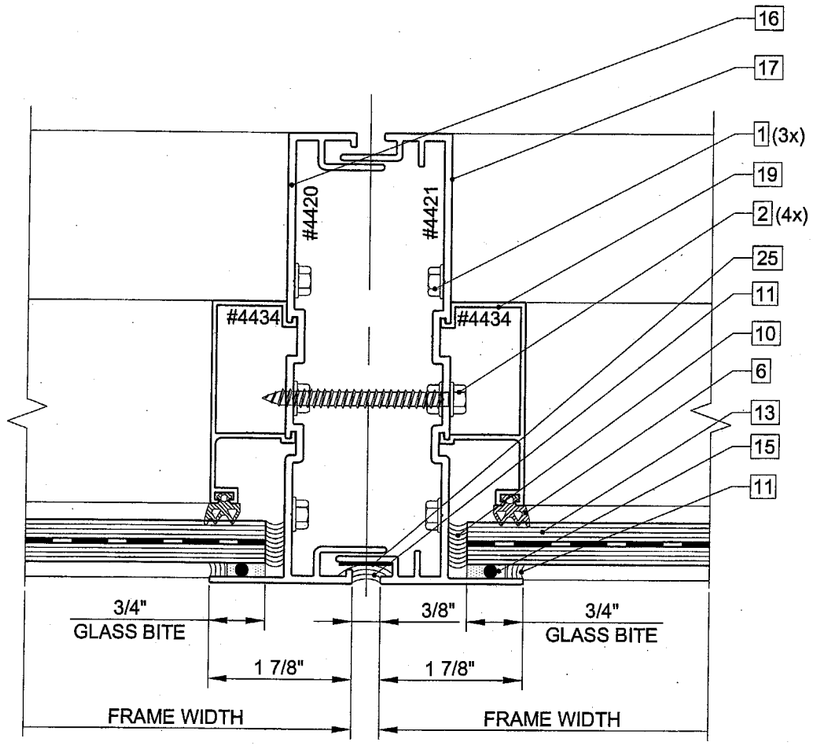

OUTSIDE

detail 102

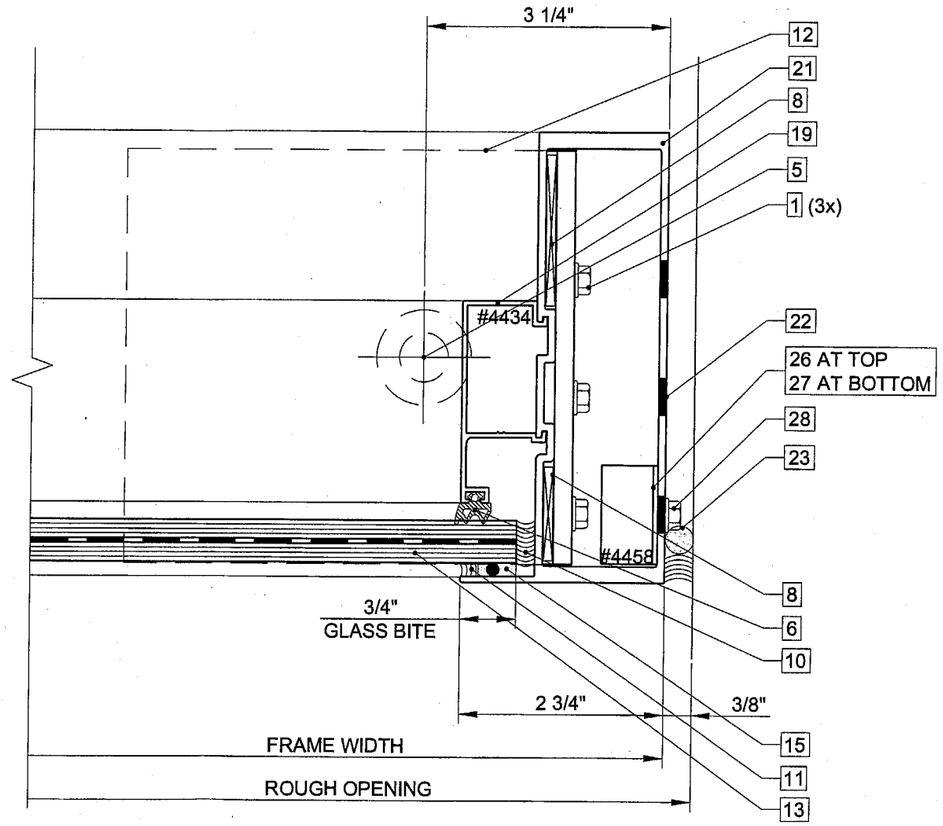

OUTSIDE

detail 103

Approved as complying with the Florida Building Code
Date 11/18/04
NOA# 04-1006.01
Miami-Dade Product Control Division
By

REVISIONS:	BY:
R2 07/009/2004	T.D.

8/31/04

Farrokh Rasekhi, P.E.
Consulting Struct. Engineer
Structural Design, Inc.
FL. Registration #38001

MANUFACTURER:

Gamma
Gamma Industrie Inc.
15407 West Dixie Highway
North Miami Beach, FL 33162
Phone: (305) 957-7004 Fax: (305) 957-7006
Web site: www.gamma-online.com
Email: tech@gamma-online.com

TITLE:

TEST # 50.4A
WINDOW WALL
50" X 108"
+115/-115 PSF
SMALL IMPACT
DETAILS 102 & 103

SCALE:	DRAWN BY:	
6" = 1'-0"	T.DESFORGES	
DATE:	DRAWING NO.	SHEET NO.
06/03/2004	T-50.4A	3 OF 8

Licence RBQ 1159-5827-22

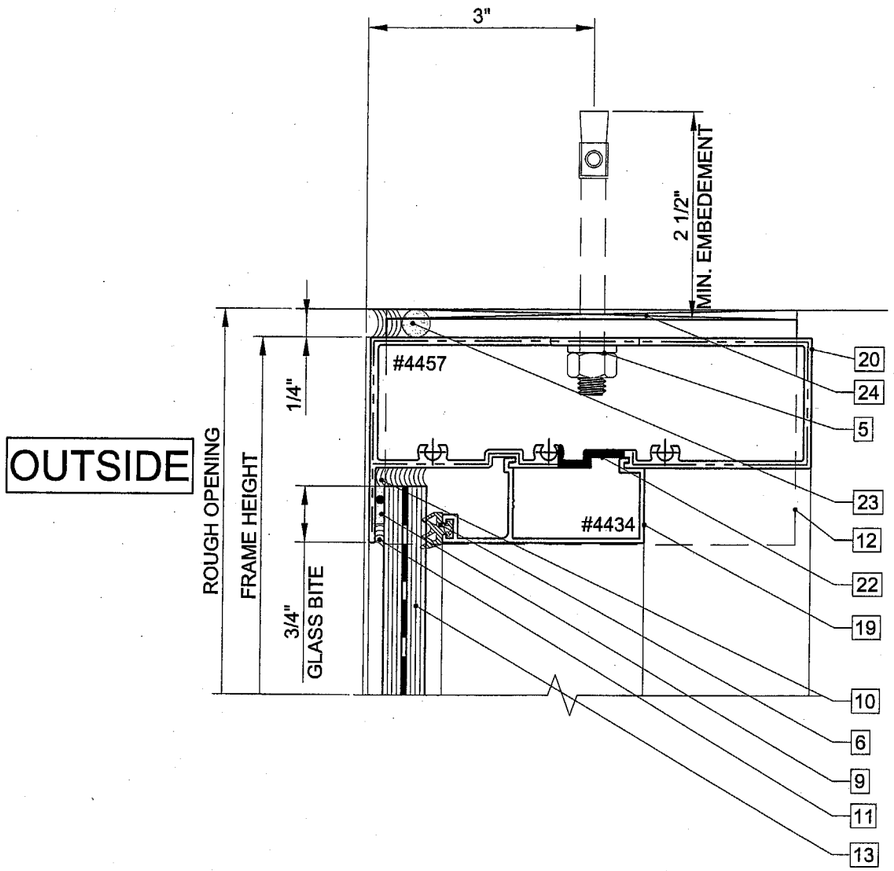

detail 104

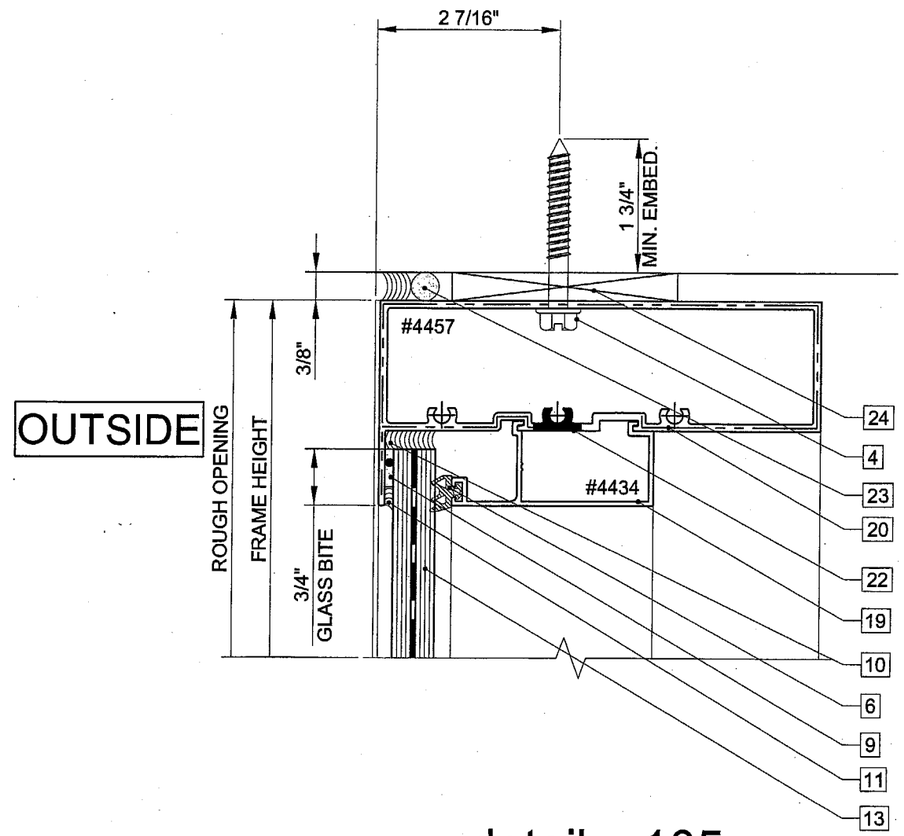

detail 105

Approved as complying with the Florida Building Code
Date 11/18/04
NOA# 04-1006.01
Miami Dade Product Control Division
By

REVISIONS:	BY:

8/31/04

Farrokh Rasekhi, P.E.
Consulting Struct. Engineer
Structural Design, Inc.
FL. Registration #38001

MANUFACTURER:

Gamma
Gamma Industrie Inc.
15407 West Dixie Highway
North Miami Beach, FL 33162
Phone: (305) 957-7004 Fax: (305) 957-7006
Web site: www.gamma-online.com
Email: tech@gamma-online.com

TITLE:

TEST # 50.4A
WINDOW WALL
50" X 108"
+115/-115 PSF
SMALL IMPACT
DETAILS 104 & 105

SCALE:	DRAWN BY:	
6" = 1'-0"	T.DESFORGES	
DATE:	DRAWING NO.	SHEET NO.
06/03/2004	T-50.4A	4 OF 8

Licence RBQ 1159-5227-22

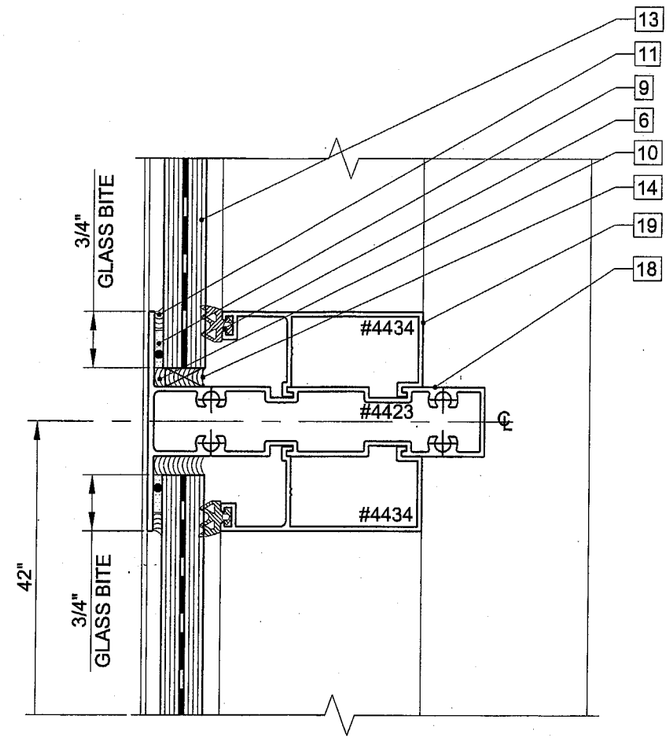

detail 106

Approved as complying with the Florida Building Code
Date 11/18/04
NOA# 04-0506.01
Miami-Dade Product Control Division
By

REVISIONS:	BY:

8/31/04

Farrokh Rasekhi, P.E.
Consulting Struct. Engineer
Structural Design, Inc.
FL. Registration #38001

MANUFACTURER:

Gamma
Gamma Industrie Inc.
15407 West Dixie Highway
North Miami Beach, FL 33162
Phone: (305) 957-7004 Fax: (305) 957-7006
Web site: www.gamma-online.com
Email: tech@gamma-online.com

TITLE:

TEST # 50.4A
WINDOW WALL
50" X 108"
+115/-115 PSF
SMALL IMPACT
DETAILS 106

SCALE:	DRAWN BY:	
6" = 1'-0"	T.DESFORGES	
DATE:	DRAWING NO.	SHEET NO.
06/03/2004	T-50.4A	5 OF 8

Licence RBQ 1159-5527-22

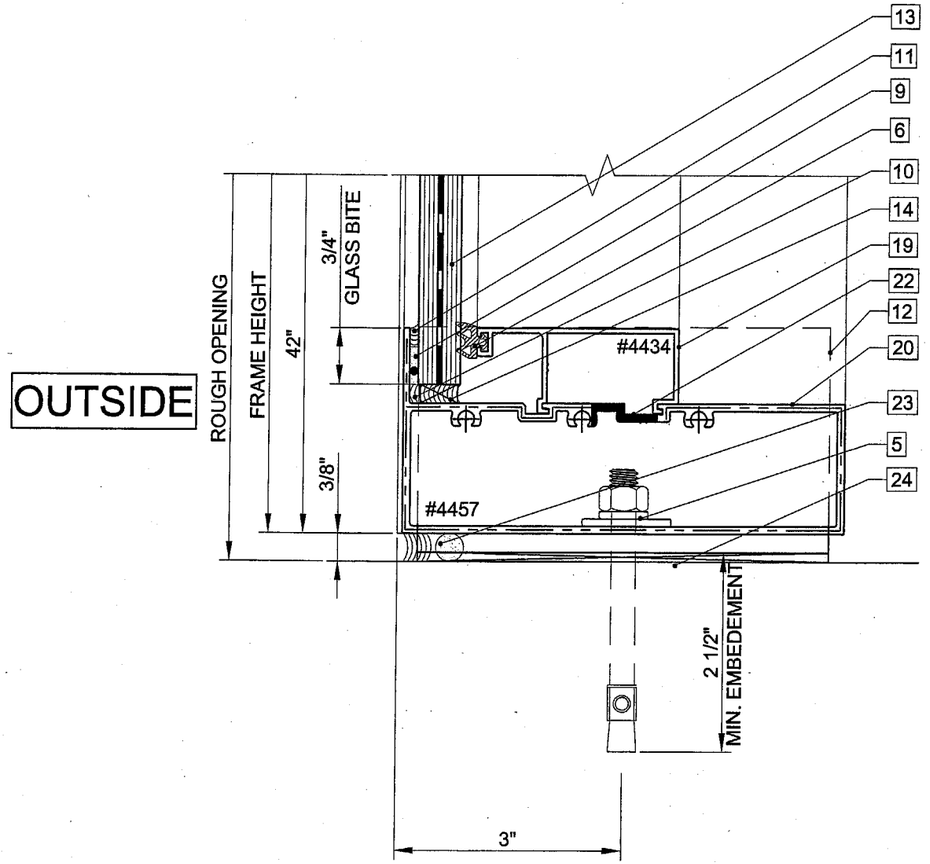

detail 107

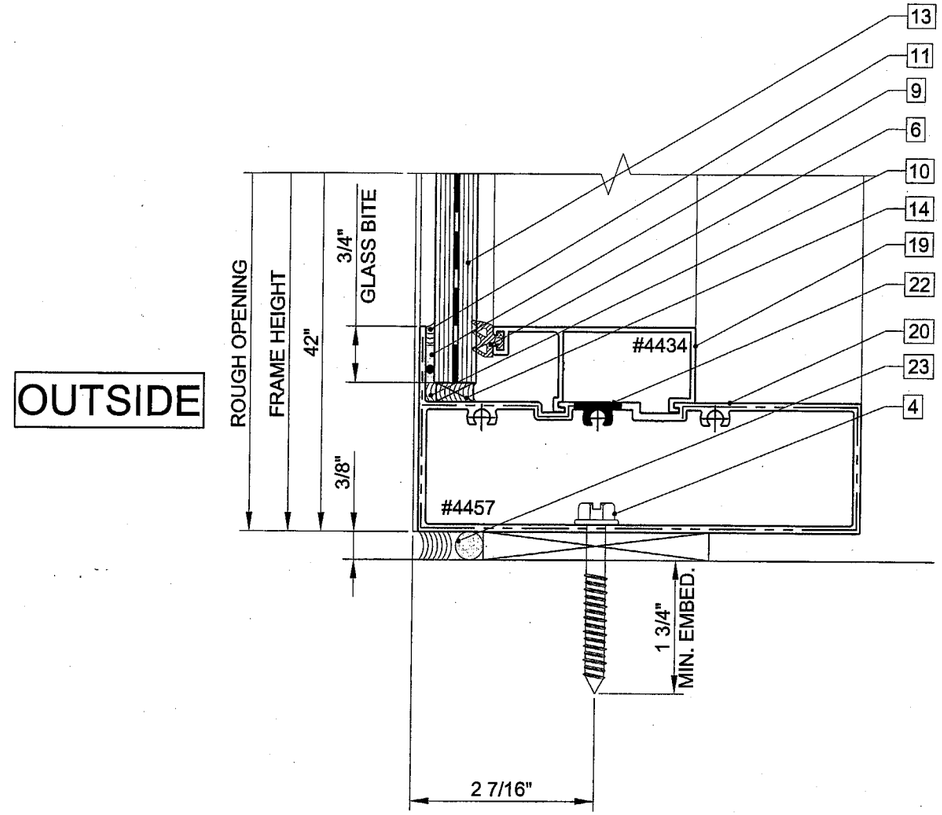

detail 108

Approved as complying with the Florida Building Code
Date 11/18/04
NOA# 04-1006.01
Miami-Dade Product Control Division
By

REVISIONS: BY:

8/31/04

Farrokh Rasekhi, P.E.
Consulting Struct. Engineer
Structural Design, Inc.
FL. Registration #38001

MANUFACTURER:

Gamma

Gamma Industrie Inc.
15407 West Dixie Highway
North Miami Beach, FL 33162

Phone: (305) 957-7004 Fax: (305) 957-7006
Web site: www.gamma-online.com
Email: tech@gamma-online.com

TITLE:

TEST # 50.4A
WINDOW WALL
50" X 108"
+115/-115 PSF
SMALL IMPACT
DETAILS 107 & 108

SCALE:	DRAWN BY:	
6" = 1'-0"	T.DESFORGES	
DATE:	DRAWING NO.	SHEET NO.
06/03/2004	T-50.4A	6 OF 8

Licence RBQ 1159-5507-22

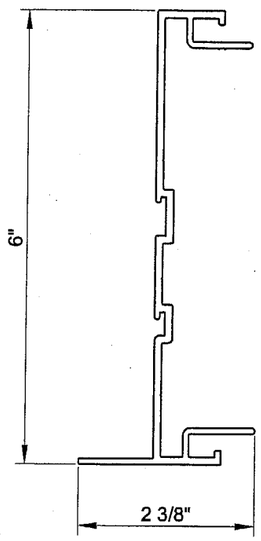

4420 ALUMINUM SPLIT MULLION (FEMALE)

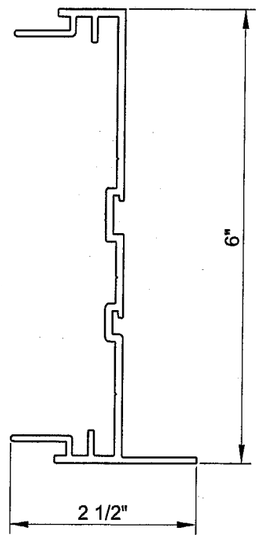

4421 ALUMINUM SPLIT MULLION (MALE)

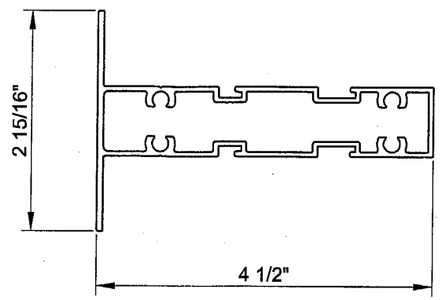

4423 ALUMINUM HORIZONTAL MULLION

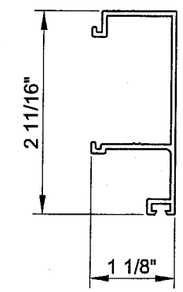

4434 ALUMINUM SNAP-ON CAP

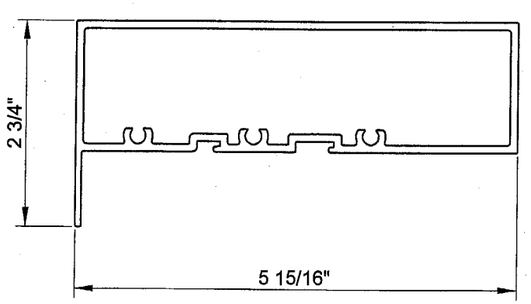

4457 ALUMINUM FRAME HEAD AND SILL

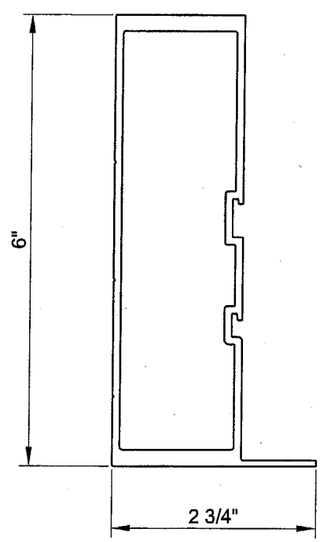

4458 ALUMINUM STRUCTURAL JAMB

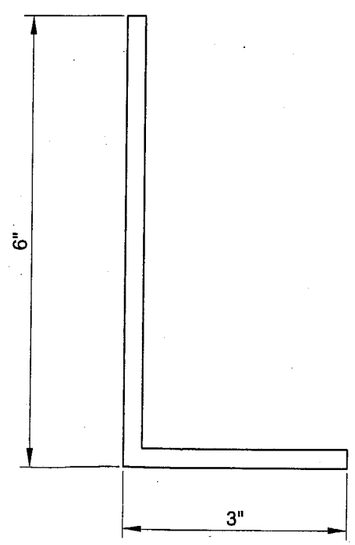

4964 ALUMINUM ANGLE (ANCHOR)

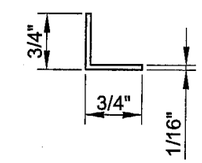

ALUMINUM BACKER ANGLE
(L3/4x3/4x1/16x1-5/16 LONG)
AT TOP

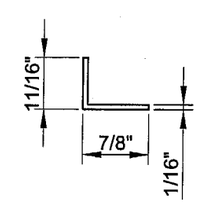

ALUMINUM BACKER ANGLE
(L7/8x11/16x1/16x1-5/16 LONG)
AT BOTTOM

FOR MORE SPECIFIC DIMENSIONS PLEASE REFER TO THE SPECIFICATION SHEET FOR EACH EXTRUSIONS

Approved as complying with the Florida Building Code
Date 11/18/04
NOA# 04-1006.01
Miami Dade Product Control Division
By

REVISIONS:	BY:
R2 07/009/2004	T.D.

8/31/04

Farrokh Rasekhi, P.E.
Consulting Struct. Engineer
Structural Design, Inc.
FL. Registration #38001

MANUFACTURER:

Gamma
Gamma Industrie Inc.
15407 West Dixie Highway
North Miami Beach, FL 33162
Phone: (305) 957-7004 Fax: (305) 957-7006
Web site: www.gamma-online.com
Email: tech@gamma-online.com

TITLE:

TEST # 50.4A
WINDOW WALL
50" X 108"
+115/-115 PSF
SMALL IMPACT
GAMMA'S EXTRUSIONS

SCALE:	DRAWN BY:	
6" = 1'-0"	T.DESFORGES	
DATE:	DRAWING NO.	SHEET NO.
06/03/2004	T-50.4A	7 OF 8

License RBQ 1159-5627-22

ITEM	PART #	DESCRIPTION
1	-	#14 HH SS SCREW x 1 1/2" LONG (3x) AT TOP & BOTTOM CORNERS
		(4x) AT HORIZONTAL MULLION
2	-	#14 HH SS SCREW x 2 1/2" LONG AT SPLIT MULLION
4	-	5/16" TAPCON SCREW - 1 3/4" MIN. EMBEDMENT
5	-	Ø 3/8" HILTI KWIK BOLT II - 2 1/2" MIN. EMBEDMENT
6	#3054	EPDM GASKET
8	-	PVC SHIM 1/8" x 1" x 2 1/2" OR 1/8" x 1" x 1 1/4"
9	-	POLYSHIM 1/8"
10	-	SILICONE SEALANT SPECTREM 2 - 3" LONG AT EACH CORNER
11	-	SILICONE SEALANT SPECTREM 2
12	#4964	ALUMINUM ANGLE 3" x 6" x 1/4" x 5 1/2" LONG
13	-	9/16" LAMINATED GLASS :
		1/4" CLEAR TEMPERED GLASS
		0.060" SAFLEX/KEEPSAFE PVB BY SOLUTIA
		1/4" CLEAR TEMPERED GLASS
14	-	NEOPRENE SITTING BLOCK 1/4" x 1/2" x 3" AT L/4
		2 AT SILL OF EACH GLASS SECTION, TOTAL OF 8.
15	-	POLYSHIM 3/16"
16	#4420	ALUMINUM SPLIT MULLION (FEMALE)
17	#4421	ALUMINUM SPLIT MULLION (MALE)
18	#4423	ALUMINUM HORIZONTAL MULLION
19	#4434	ALUMINUM SNAP-ON CAP
20	#4457	ALUMINUM FRAME HEAD & SILL
21	#4458	ALUMINUM FRAME JAMB
22	-	ACCESS HOLES Ø 7/8"
23	-	BACKER ROD & SEALANT SPECTREM 3
24	-	PVC SHIM
25	-	BOND BREAKER
26	-	ALUMINUM BACKER ANGLE L3/4" x 3/4" x 1/16" x 1 5/16" LONG AT TOP
27	-	ALUMINUM BACKER ANGLE L7/8" x 11/16" x 1/16" x 1 5/16" LONG AT BOTTOM
28	-	#10 HH SELF DRILLING SCREW x 5/8" LONG

Approved as complying with the Florida Building Code
Date 11/18/04
NOA# 04-1006.01
Miami-Dade Product Control Division
By

REVISIONS:	BY:
R2 07/009/2004	T.D.

8/31/04

Farrokh Rasekhi, P.E.
Consulting Struct. Engineer
Structural Design, Inc.
FL. Registration #38001

MANUFACTURER:

Gamma
Gamma Industrie Inc.
15407 West Dixie Highway
North Miami Beach, FL 33162
Phone: (305) 957-7004 Fax: (305) 957-7006
Web site: www.gamma-online.com
Email: tech@gamma-online.com

TITLE:

TEST # 50.4A
WINDOW WALL
50" X 108"
+115/-115 PSF
SMALL IMPACT
BILL OF MATERIEL

SCALE:	DRAWN BY:	
N.T.S.	T.DESFORGES	
DATE:	DRAWING NO.	SHEET NO.
06/03/2004	T-50.4A	8 OF 8

Licence: RBQ 1159-5627-22