MIAMI-DADE COUNTY
BUILDING CODE COMPLIANCE OFFICE (BCCO)
PRODUCT CONTROL DIVISION

MIAMI-DADE COUNTY, FLORIDA
METRO-DADE FLAGLER BUILDING
140 WEST FLAGLER STREET, SUITE 1603
MIAMI, FLORIDA 33130-1563
(305) 375-2901 FAX (305) 375-2908

NOTICE OF ACCEPTANCE (NOA)

Gamma U.S.A.
15407 West Dixie Highway
North Miami Beach, FL 33162

SCOPE:

This NOA is being issued under the applicable rules and regulations governing the use of construction materials. The documentation submitted has been reviewed by Miami-Dade County Product Control Division and accepted by the Board of Rules and Appeals (BORA) to be used in Miami Dade County and other areas where allowed by the Authority Having Jurisdiction (AHJ).

This NOA shall not be valid after the expiration date stated below. The Miami-Dade County Product Control Division (In Miami Dade County) and/or the AHJ (in areas other than Miami Dade County) reserve the right to have this product or material tested for quality assurance purposes. If this product or material fails to perform in the accepted manner, the manufacturer will incur the expense of such testing and the AHJ may immediately revoke, modify, or suspend the use of such product or material within their jurisdiction. BORA reserves the right to revoke this acceptance, if it is determined by Miami-Dade County Product Control Division that this product or material fails to meet the requirements of the applicable building code.

This product is approved as described herein, and has been designed to comply with the Florida Building Code, including the High Velocity Hurricane Zone.

DESCRIPTION: Series 75 Balcony Aluminum Outswing Balcony Entrance Door with Transom Lite

APPROVAL DOCUMENT: Drawing No. **T-75**, titled "Test # 75 Balcony Door 42" x 120" +90/-120 PSF Small Impact Elevation", sheets 1 thru 7 of 7, prepared by manufacturer, dated 03/22/04, with revision **"RI"** dated 06/16/04, signed by sealed by Farrokh Rasekhi, P.E., bearing the Miami-Dade County Product Control Approval stamp with the Notice of Acceptance number and approval date by the Miami-Dade County Product Control Division.

MISSILE IMPACT RATING: Small Missile Impact

LABELING: Each unit shall bear a permanent label with the manufacturer's name or logo, city, state and following statement: "Miami-Dade County Product Control Approved", unless otherwise noted herein.

RENEWAL of this NOA shall be considered after a renewal application has been filed and there has been no change in the applicable building code negatively affecting the performance of this product.

TERMINATION of this NOA will occur after the expiration date or if there has been a revision or change in the materials, use, and/or manufacture of the product or process. Misuse of this NOA as an endorsement of any product, for sales, advertising or any other purposes shall automatically terminate this NOA. Failure to comply with any section of this NOA shall be cause for termination and removal of NOA.

ADVERTISEMENT: The NOA number preceded by the words Miami-Dade County, Florida, and followed by the expiration date may be displayed in advertising literature. If any portion of the NOA is displayed, then it shall be done in its entirety.

INSPECTION: A copy of this entire NOA shall be provided to the user by the manufacturer or its distributors and shall be available for inspection at the job site at the request of the Building Official.
This NOA consists of this page 1 and evidence pages E-1, as well as approval document mentioned above.
The submitted documentation was reviewed by **Herminio F. Gonzalez, P.E., Director, BCCO**

10/28/04

PRODUCT CONTROL ACCEPTED

Gamma USA

NOTICE OF ACCEPTANCE: EVIDENCE SUBMITTED

A. DRAWINGS

1. Manufacturer's die drawings and sections.
2. Drawing No. **T-75**, Sheets 1 thru 7 of 7, titled "Test # 75 Balcony Door 42"x120" +90/-120PSF Small Impact Elevation", dated 03/22/04, with revision **"R1"** dated 06/16/04, prepared by manufacturer, signed and sealed by Farrokh Rasekhi, P.E.

B. TESTS

1. Test reports on 1) Air Infiltration Test, per FBC, TAS 202-94
   2) Uniform Static Air Pressure Test, Loading per FBC, TAS 202-94
   3) Water Resistance Test, per FBC, TAS 202-94
   4) Small Missile Impact Test, FBC, TAS 201-94
   5) Cyclic Loading Test, per FBC, TAS 203-94
   6) Forced Entry Test, per FBC 2411.3.2.1and TAS 202-94.

   along with installation diagram of a aluminum outswinging door with transom lite, prepared by Fenestration Testing Laboratory, Inc. No. **FTL-4193** dated 05/19/04, signed and sealed by Edmundo J. Largaespada, P.E.

C. CALCULATIONS

1. Anchor calculations, ASTM- E 1300 and, structural analysis, dated 08/27/04, prepared by Structural Design, Inc., signed and sealed by Farrokh Rasekhi, P.E.

D. QUALITY ASSURANCE

1. Miami Dade Building Code Compliance Office (BCCO).

E. MATERIAL CERTIFICATIONS

1. Notice of Acceptance No. **01-0205.02** issued to Solutia, Inc. for "Saflex/Keepsafe Maximum" dated 05/17/01, expiring on 05/21/06.

F. STATEMENTS

1. Statement letter of conformance, dated August 24, 2004, signed and sealed by Farrokh Rasekhi, P.E.
2. Statement letter of no financial interest, dated August 24, 2004, signed and sealed by Farrokh Rasekhi, P.E.

G. OTHER

1. Letter from the consultant stating that the product is in compliance with Florida Building Code (FBC).

Herminio F. Gonzalez, P.E.
Director, Building Code Compliance Office
NOA No 04-1006.04
Expiration Date: November 18, 2009
Approval Date: November 18, 2004

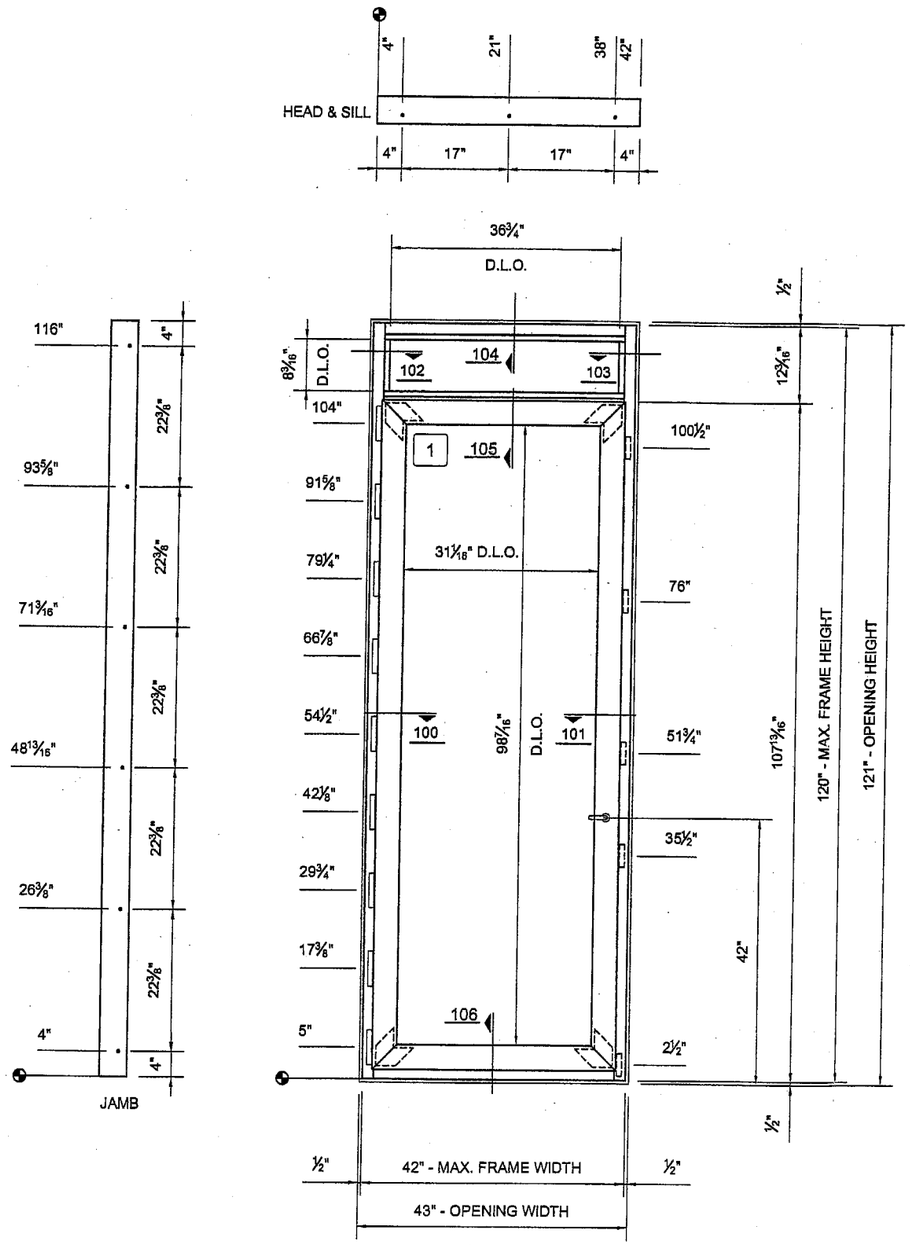

GENERAL NOTES

1 -GLASS TYPE: 9/16" LAMINATED GLASS
1/4" CLEAR TEMPERED GLASS
0.060" PVB
1/4" CLEAR TEMPERED GLASS
-MAXIMUM GLASS DIMENSION 32 9/16" X 99 15/16"
-ALL ALUMINUM IS 6063 T6
-GLAZING PENETRATION: 3/4" FOR DOOR
9/16" FOR TRANSOM

-1/2" MAX. SHIM SPACE
-CONCRETE APPLICATION
-FRAME CORNERS SEALED WITH CLEAR SEALANT
-REFER TO BILL OF MATERIEL SHEET FOR COMPLETE DESCRIPTION

SHUTTER REQUIREMENTS:
1- INSTALLATION OF THIS UNIT ABOVE 30 FT ABOVE GRADE WILL NOT REQUIRE SHUTTERS
2- MIAMI DADE COUNTY APPROVED SHUTTERS WILL BE REQUIRED FOR INSTALLATION OF THIS UNIT BELOW 30 FT ABOVE THE GRADE

Approved as complying with the Florida Building Code
Date 11/18/04
NOA# 04-1006.04
Miami-Dade Product Control Division
By

REVISIONS:	BY:
R1 06-16-2004	M.P.

8/31/04

Farrokh Rasekhi, P.E.
Consulting Struct. Engineer
Structural Design, Inc.
FL. Registration #38001

ALL ALUMINUM IS 6063 T6

MANUFACTURER:

Gamma
Gamma Industrie Inc.
15407 West Dixie Highway
North Miami Beach, FL 33162
Phone: (305) 957-7004 Fax: (305) 957-7008
Web site: www.gamma-online.com
Email: tech@gamma-online.com

TITLE:

TEST # 75
BALCONY DOOR
42" X 120"
+90/-120 PSF
SMALL IMPACT
ELEVATION

SCALE:	DRAWN BY:	
1/2" = 1'-0"	M. POTVIN	
DATE:	DRAWING NO.	SHEET NO.
03/22/2004	T-75	1 OF 7

Licence RBQ 1159-5527-22

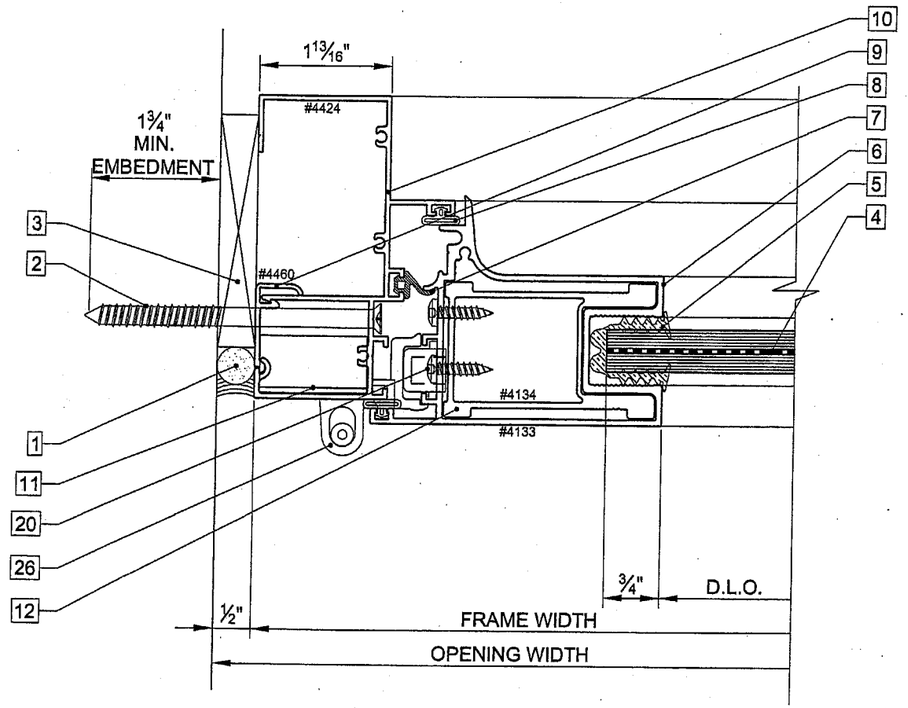

OUTSIDE

detail 100

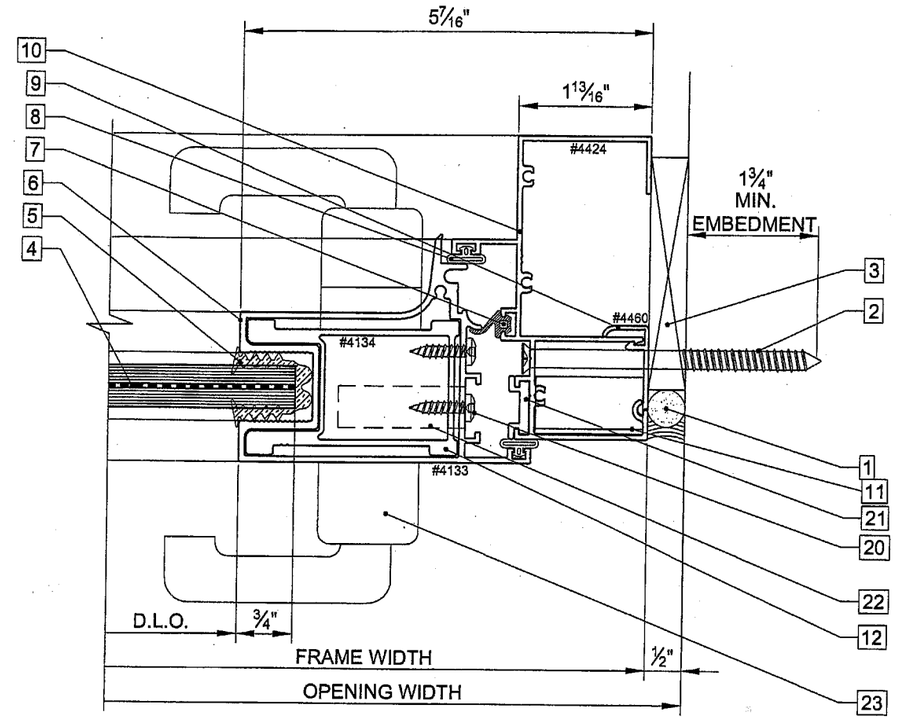

OUTSIDE

detail 101

Approved as complying with the Florida Building Code
Date 11/18/04
NOA# 04-1006.04
Miami Dade Product Control Division
By

REVISIONS:	BY:
R1 06-16-2004	M.P.

8/31/04

Farrokh Rasekhi, P.E.
Consulting Struct. Engineer
Structural Design, Inc.
FL. Registration #38001

ALL ALUMINUM IS 6063 T6

MANUFACTURER:

Gamma
Gamma Industrie Inc.
15407 West Dixie Highway
North Miami Beach, FL 33162
Phone: (305) 957-7004 Fax: (305) 957-7006
Web site: www.gamma-online.com
Email: tech@gamma-online.com

TITLE:

TEST # 75
BALCONY DOOR
42" X 120"
+90/-120 PSF
SMALL IMPACT
DETAILS 100 & 101

SCALE:	DRAWN BY:	
6" = 1'-0"	M. POTVIN	
DATE: 03/22/2004	DRAWING NO. T-75	SHEET NO. 2 OF 7

Licence RBQ 1159-5627-22

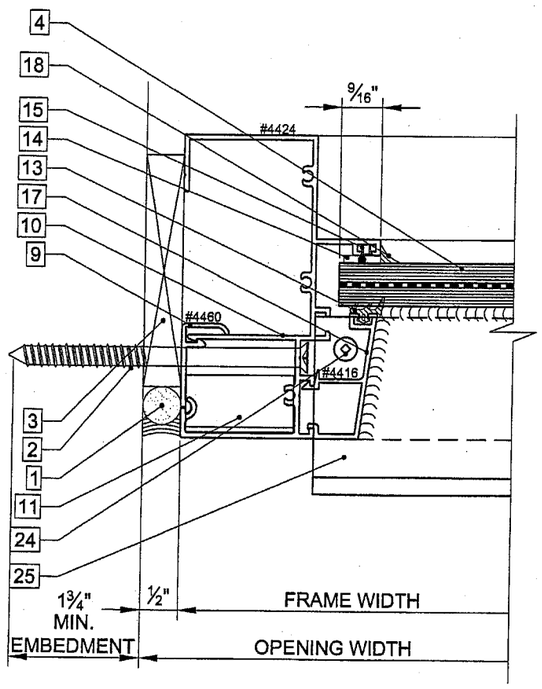

OUTSIDE

detail 102

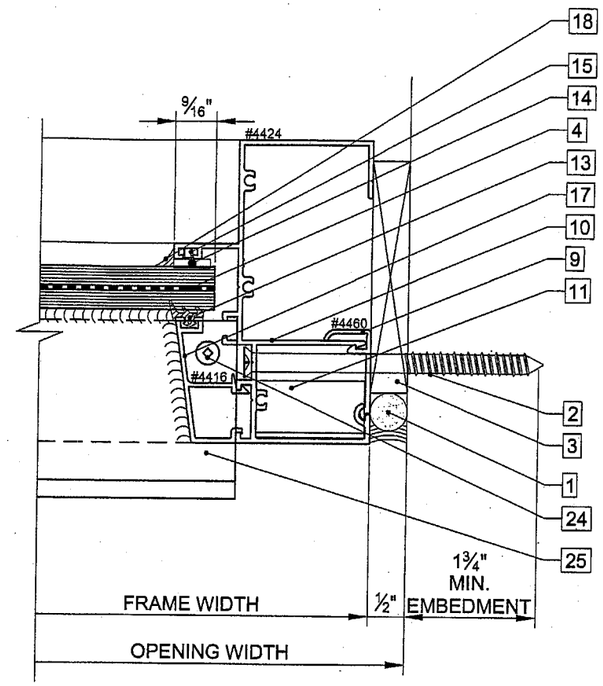

OUTSIDE

detail 103

Approved as complying with the Florida Building Code
Date 11/18/04
NOA# 04-1006.04
Miami-Dade Product Control Division
By

REVISIONS:	BY:
R1 06-16-2004	M.P.

8/31/04

Farrokh Rasekhi, P.E.
Consulting Struct. Engineer
Structural Design, Inc.
FL. Registration #38001

ALL ALUMINUM IS 6063 T6

MANUFACTURER:

Gamma
Gamma Industrie Inc.
15407 West Dixie Highway
North Miami Beach, FL 33162
Phone: (305) 957-7004 Fax: (305) 957-7006
Web site: www.gamma-online.com
Email: tech@gamma-online.com

TITLE:

TEST # 75
BALCONY DOOR
42" X 120"
+90/-120 PSF
SMALL IMPACT
DETAILS 102 & 103

SCALE:	DRAWN BY:	
6" = 1'-0"	M. POTVIN	
DATE:	DRAWING NO.	SHEET NO.
03/22/2004	T-75	3 OF 7

Licence RBQ 1159-5527-22

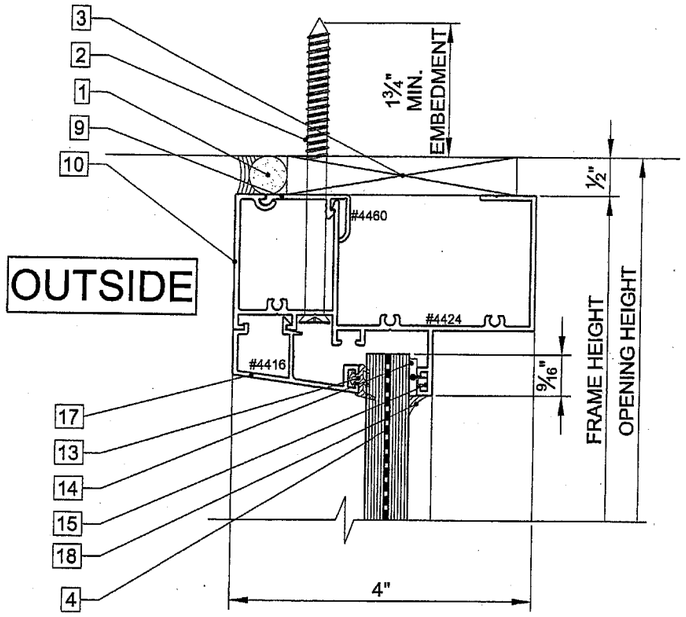

detail 104

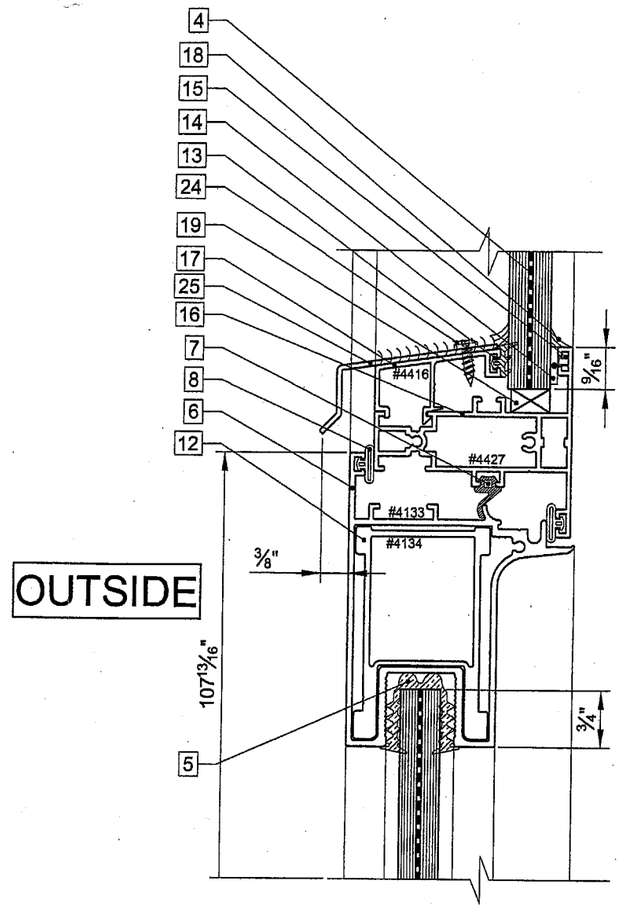

detail 105

Approved as complying with the Florida Building Code
Date 11/18/04
NOA# 04-1006.04
Miami Dade Product Control Division
By

REVISIONS:	BY:
R1 06-16-2004	M.P.

8/31/04

Farrokh Rasekhi, P.E.
Consulting Struct. Engineer
Structural Design, Inc.
FL. Registration #38001

ALL ALUMINUM IS 6063 T6

MANUFACTURER:

Gamma

Gamma Industrie Inc.
15407 West Dixie Highway
North Miami Beach, FL 33162
Phone: (305) 957-7004 Fax: (305) 957-7006
Web site: www.gamma-online.com
Email: tech@gamma-online.com

TITLE:

TEST # 75
BALCONY DOOR
42" X 120"
+90/-120 PSF
SMALL IMPACT
DETAILS 104 & 105

SCALE:	DRAWN BY:	
6" = 1'-0"	M. POTVIN	
DATE:	DRAWING NO.	SHEET NO.
03/22/2004	T-75	4 OF 7

Licence RBQ 1159-5627-22

Approved as complying with the
Florida Building Code
Date 11/18/04
NOA# 04-1006.04
Miami Dade Product Control
Division
By

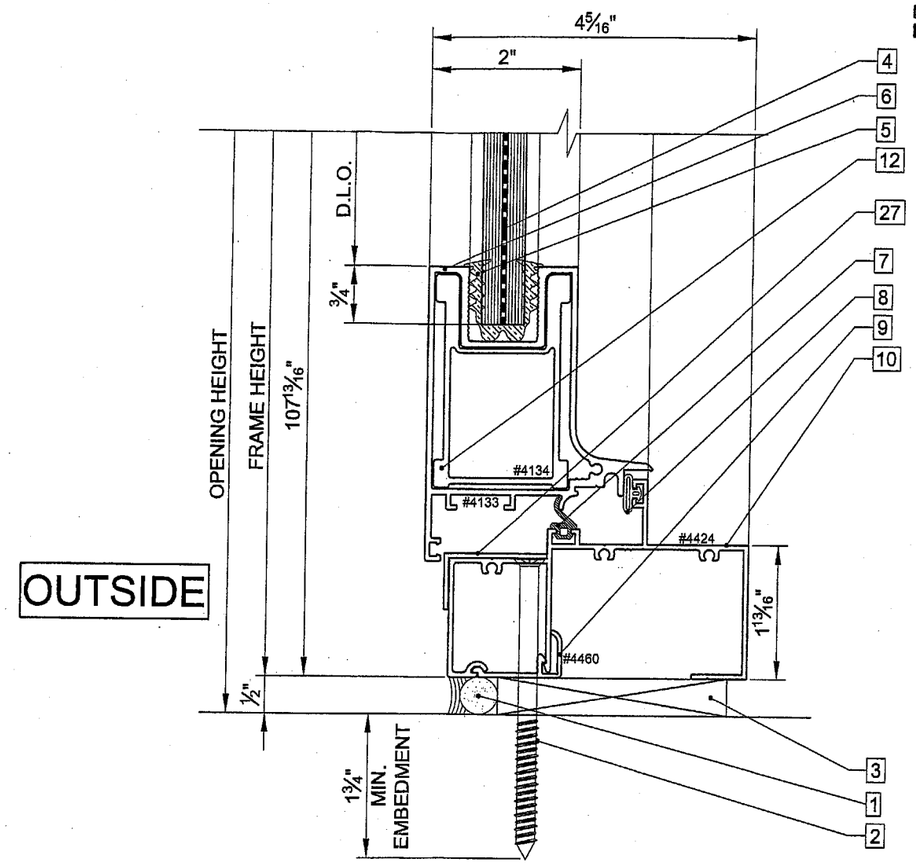

detail 106

REVISIONS:	BY:
R1 06-16-2004	M.P.

8/31/04

Farrokh Rasekhi, P.E.
Consulting Struct. Engineer
Structural Design, Inc.
FL. Registration #38001

ALL ALUMINUM IS 6063 T6

MANUFACTURER:

Gamma

Gamma Industrie Inc.
15407 West Dixie Highway
North Miami Beach, FL 33162

Phone: (305) 957-7004 Fax: (305) 957-7006
Web site: www.gamma-online.com
Email: tech@gamma-online.com

TITLE:

TEST # 75
BALCONY DOOR
42" X 120"
+90/-120 PSF
SMALL IMPACT
DETAIL 106

SCALE:	DRAWN BY:	
6" = 1'-0"	M. POTVIN	
DATE:	DRAWING NO.	SHEET NO.
03/22/2004	T-75	5 OF 7

Licence RBQ 1159-5927-22

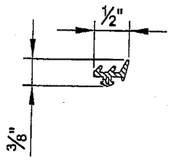

#3008
EDPM GASKET

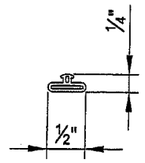

#3009
EDPM GASKET

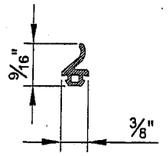

#3047
SANTOPRENE GASKET

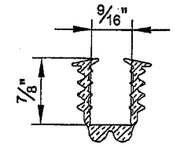

#3066
PVC GLAZING GASKET

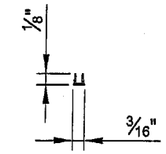

#3077
PVC INSERT

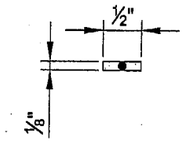

POLYSHIM 1/8"

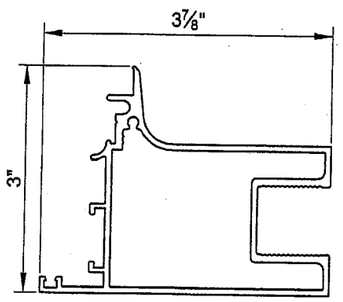

#4133 ALUMINUM FRAME
BALCONY DOORS

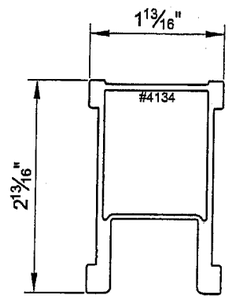

#4134 ALUMINUM
CORNER ASSEMBLY

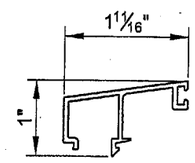

#4416 ALUMINUM
SNAP-ON CAP

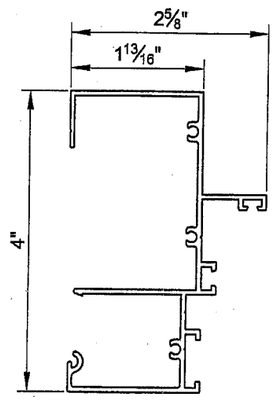

#4424 ALUMINUM
DOORS FRAME

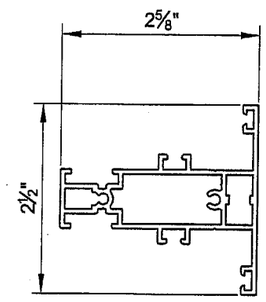

#4427 ALUMINUM
HORIZONTAL MULLION

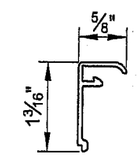

#4460 ALUMINUM
SCREWING CAP

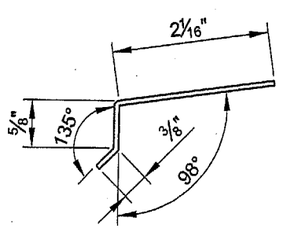

ALUMINUM FLASHING 1/16"

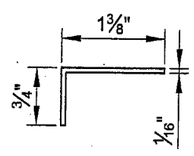

ALUMINUM ANGLE 1/16"
38 1/2" LONG

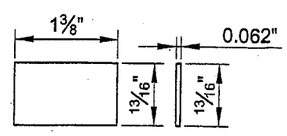

ALUMINUM PLATE 1/16"

FOR MORE SPECIFIC
DIMENSIONS PLEASE
REFER TO THE
SPECIFICATION SHEET
FOR EACH EXTRUSIONS

Approved as complying with the
Florida Building Code
Date 11/18/04
NOA# 04-1006.04
Miami-Dade Product Control
Division
By

REVISIONS:	BY:
R1 06-16-2004	M.P.

8/31/04

Farrokh Rasekhi, P.E.
Consulting Struct. Engineer
Structural Design, Inc.
FL. Registration #38001

ALL ALUMINUM IS 6063 T6

MANUFACTURER:

Gamma
Gamma Industrie Inc.
15407 West Dixie Highway
North Miami Beach, FL 33162
Phone: (305) 957-7004 Fax: (305) 957-7006
Web site: www.gamma-online.com
Email: tech@gamma-online.com

TITLE:

TEST # 75
BALCONY DOOR
42" X 120"
+90/-120 PSF
SMALL IMPACT
ITEMS

SCALE:	DRAWN BY:	
6" = 1'-0"	M. POTVIN	
DATE:	DRAWING NO.	SHEET NO.
03/22/2004	T-75	6 OF 7

Licence RBQ 1159-5527-22

ITEM	PART #	DESCRIPTION
1	-	BAKER ROD & SEALANT SPECTREM 3
2	-	Ø5/16" TAPCON (TRIMFIT) SCREW FH - 1¾" MIN. EMBEDMENT
3	-	PVC SHIM
4	-	9/16" LAMINATED GLASS
		-¼" CLEAR TEMPERED GLASS
		-0.060" PVB (SOLUTIA)
		-¼" CLEAR TEMPERED GLASS
5	#3066	GLAZING GASKET
6	#4133	ALUMINUM DOOR - SASH FRAME
7	#3047	SANTOPRENE GASKET
8	#3004	GASKET
9	#4460	ALUMINUM SNAP-ON CAP
10	#4424	ALUMINUM DOOR FRAME
11	-	ALUMINUM PLATE 1 3/8" x 13/16" x 1/16" THICK ATTACHED TO FRAME WITH #8 FH SS SCREW 1" LONG
12	#4134	ALUMINUM CORNER ASSEMBLY
13	#3008	EDPM GASKET
14	-	POLYSHIM ⅛"
15	#3077	PVC INSERT
16	#4427	ALUMINUM HORIZONTAL MULLION
17	#4416	ALUMINUM SNAP-ON CAP
18	-	SEALANT SPECTREM 2
19	-	NEOPRENE SITTING BLOCK ¼" x ½" x 3" (AT L/4)
20	-	#10 RH SS SCREW x ¾" LONG
21	-	KEEPERS SAVIO #1246.835
22	-	MECHANISM FERCO G-21064-40-P-8
23	-	HANDLE FERCO M-050920 & MIDDLE KEEPER FERCO #6-26037-24-R-3
24	-	#8 RH SS SCREW x ½" LONG
25	-	ALUMINUM FLASHING 1/16"
26	-	ALUMINUM HINGE SAVIO #1122.1 SEALED WITH FOAM TAPE
27	-	ALUMINUM ANGLE 3/4" x 1 3/8" x 1/16" THICK 38 1/2" LONG GLUED WITH SILICONE

Approved as complying with the Florida Building Code
Date 11/18/04
NOA# 04-1006.04
Miami-Dade Product Control Division
By

REVISIONS:	BY:
R1 06-16-2004	M.P.

8/31/04

Farrokh Rasekhi, P.E.
Consulting Struct. Engineer
Structural Design, Inc.
FL. Registration #38001

ALL ALUMINUM IS 6063 T6

MANUFACTURER:

Gamma

Gamma Industrie Inc.
15407 West Dixie Highway
North Miami Beach, FL 33162
Phone: (305) 957-7004 Fax: (305) 957-7008
Web site: www.gamma-online.com
Email: tech@gamma-online.com

TITLE:

TEST # 75
BALCONY DOOR
42" X 120"
+90/-120 PSF
SMALL IMPACT
BILL OF MATERIEL

SCALE:	DRAWN BY:	
N.T.S.	M. POTVIN	
DATE:	DRAWING NO.	SHEET NO.
03/22/2004	T-75	7 OF 7

Licence RBQ 1159-5527-22