MIAMI-DADE

BUILDING CODE COMPLIANCE OFFICE (BCCO)
PRODUCT CONTROL DIVISION

MIAMI-DADE COUNTY, FLORIDA
METRO-DADE FLAGLER BUILDING
140 WEST FLAGLER STREET, SUITE 1603
MIAMI, FLORIDA 33130-1563
(305) 375-2901 FAX (305) 375-2908

NOTICE OF ACCEPTANCE (NOA)

Phoenix Architectural Products, Inc.
1700 Marietta Blvd., Suite C
Atlanta, GA 30318

SCOPE:

This NOA is being issued under the applicable rules and regulations governing the use of construction materials. The documentation submitted has been reviewed by Miami-Dade County Product Control Division and accepted by the Board of Rules and Appeals (BORA) to be used in Miami Dade County and other areas where allowed by the Authority Having Jurisdiction (AHJ).

This NOA shall not be valid after the expiration date stated below. The Miami-Dade County Product Control Division (In Miami Dade County) and/or the AHJ (in areas other than Miami Dade County) reserve the right to have this product or material tested for quality assurance purposes. If this product or material fails to perform in the accepted manner, the manufacturer will incur the expense of such testing and the AHJ may immediately revoke, modify, or suspend the use of such product or material within their jurisdiction. BORA reserves the right to revoke this acceptance, if it is determined by Miami-Dade County Product Control Division that this product or material fails to meet the requirements of the applicable building code.

This product is approved as described herein, and has been designed to comply with the High Velocity Hurricane Zone of the Florida Building Code.

DESCRIPTION: "Sure guard plus" Window Security Barrier System

APPROVAL DOCUMENT: Drawing No. **S101-01**, titled "Sure Guard plus / Window Security Barrier System", sheets 1 through 6 of 6, prepared by Tilteco, Inc., dated September 13, 2004, signed and sealed by Walter A. Tillit Jr., P.E., bearing the Miami-Dade County Product Control Approval stamp with the Notice of Acceptance number and approval date by the Miami-Dade County Product Control Division.

MISSILE IMPACT RATING: Large and Small Missile Impact

LABELING: Each panel shall bear a permanent label with the manufacturer's name or logo, city, state and the following statement: "Miami-Dade County Product Control Approved", unless otherwise noted herein.

RENEWAL of this NOA shall be considered after a renewal application has been filed and there has been no change in the applicable building code negatively affecting the performance of this product.

TERMINATION of this NOA will occur after the expiration date or if there has been a revision or change in the materials, use, and/or manufacture of the product or process. Misuse of this NOA as an endorsement of any product, for sales, advertising or any other purposes shall automatically terminate this NOA. Failure to comply with any section of this NOA shall be cause for termination and removal of NOA.

ADVERTISEMENT: The NOA number preceded by the words Miami-Dade County, Florida, and followed by the expiration date may be displayed in advertising literature. If any portion of the NOA is displayed, then it shall be done in its entirety.

INSPECTION: A copy of this entire NOA shall be provided to the user by the manufacturer or its distributors and shall be available for inspection at the job site at the request of the Building Official.

This NOA consists of this page 1, evidence submitted page(s) as well as approval document mentioned above. The submitted documentation was reviewed by **Helmy A. Makar, P.E.**

Helmy A. Makar
12/02/2004

PRODUCT CONTROL ACCEPTED

NOA No 04-1006.07
Expiration Date: 12/02/2009
Approval Date: 12/02/2004

GENERAL NOTES

1. THIS WINDOW SECURITY BARRIER SYSTEM SHOWN ON THIS PRODUCT APPROVAL DOCUMENT (P.A.D.) HAS BEEN VERIFIED FOR COMPLIANCE IN ACCORDANCE WITH THE 2001 EDITION OF THE FLORIDA BUILDING CODE.
THIS WINDOW SECURITY BARRIER SYSTEM MAY BE INSTALLED AT HIGH VELOCITY HURRICANE ZONES.
DESIGN WIND LOADS SHALL BE DETERMINED AS PER SECTION 1619 OF THE ABOVE MENTIONED CODE. IN ORDER TO VERIFY THAT ANCHORS ON THIS P.A.D., AS TESTED, WERE NOT OVERSTRESSED, A 33% INCREASE IN ALLOWABLE STRESS FOR WIND LOADS WAS USED IN THEIR ANALYSIS.
WINDOW SECURITY BARRIER SYSTEM'S ADEQUACY FOR IMPACT AND FATIGUE RESISTANCE HAS BEEN VERIFIED IN ACCORDANCE WITH SECTION 1606.1.4 OF THE ABOVE MENTIONED CODE AS PER HTL REPORT # 0340-0915-04 AS PER TAS-201, TAS-202 AND TAS-203.

2. SYSTEM MOUNTS TO THE MASONRY OPENING BY MEANS OF AN ALUMINUM "L" BAR (ITEM # 3 IN B.O.M.), OR DIRECTLY WITH 6 OR BUILDOUT WITH 6 & 8.

3. PRODUCT ANCHORS SHALL BE AS LISTED AND SPACED AS SHOWN ON DETAILS ON SHEETS 2, 3 & 4. ANCHOR EMBEDMENT AND EDGE DISTANCE TO BASE MATERIAL SHALL BE BEYOND WALL DRESSING OR STUCCO.

4. ALL COMPONENTS SHALL BE AS PER BILL OF MATERIALS SHEET 6 OF 6.

5. DESIGN PRESSURE RATING IS:

POSITIVE 86 PSF NEGATIVE 144 PSF

6. SELF TAPPING SCREWS MANUFACTURED TO ASTM A510-03, ZINC PLATED AS PER ASTM B-633 OR TO COMPLY WITH DIN 50018, WITH MINIMUM TENSILE STRENGTH OF 100 KSI.

7. WINDOW SECURITY BARRIER SYSTEM'S MANUFACTURER STAMP SHALL BE PLACED ON THE EXPOSED SURFACE OF THE FRAME 2 OR 7
ONE LABEL SHALL BE PLACED FOR EVERY OPENING. LABEL SHALL READ AS FOLLOWS:
PHOENIX ARCHITECTURAL PRODUCTS
ATLANTA, GA.
MIAMI-DADE COUNTY PRODUCT CONTROL APPROVED.

8. (a) THIS P.A.D. PREPARED BY THIS ENGINEER IS GENERIC AND DOES NOT PROVIDE INFORMATION FOR A SITE SPECIFIC PROJECT; i.e. WHERE THE SITE CONDITIONS DEVIATE FROM THE P.A.D.

(b) CONTRACTOR TO BE RESPONSIBLE FOR THE SELECTION, PURCHASE AND INSTALLATION INCLUDING LIFE SAFETY OF THIS PRODUCT, BASED ON THIS P.A.D., PROVIDED HE/SHE DOES NOT DEVIATE FROM THE CONDITIONS DETAILED ON THIS DOCUMENT. CONSTRUCTION SAFETY AT SITE IS THE CONTRACTOR'S RESPONSIBILITY.

(c) THIS P.A.D. WILL BE CONSIDERED INVALID IF ALTERED BY ANY MEANS.

(d) SITE SPECIFIC PROJECTS SHALL BE PREPARED BY A FLORIDA REGISTERED ENGINEER OR ARCHITECT WHICH WILL BECOME THE ENGINEER OF RECORD (P.O.R.) FOR THE PROJECT AND WHO WILL BE RESPONSIBLE FOR THE PROPER USE OF THE P.A.D. ENGINEER OF RECORD, ACTING AS A DELEGATED ENGINEER TO THE P.A.D. ENGINEER SHALL SUBMIT TO THIS LATTER THE SITE SPECIFIC DRAWINGS FOR REVIEW.

(e) THIS P.A.D. SHALL BEAR THE DATE AND ORIGINAL SEAL AND SIGNATURE OF THE PROFESSIONAL ENGINEER OF RECORD THAT PREPARED IT.

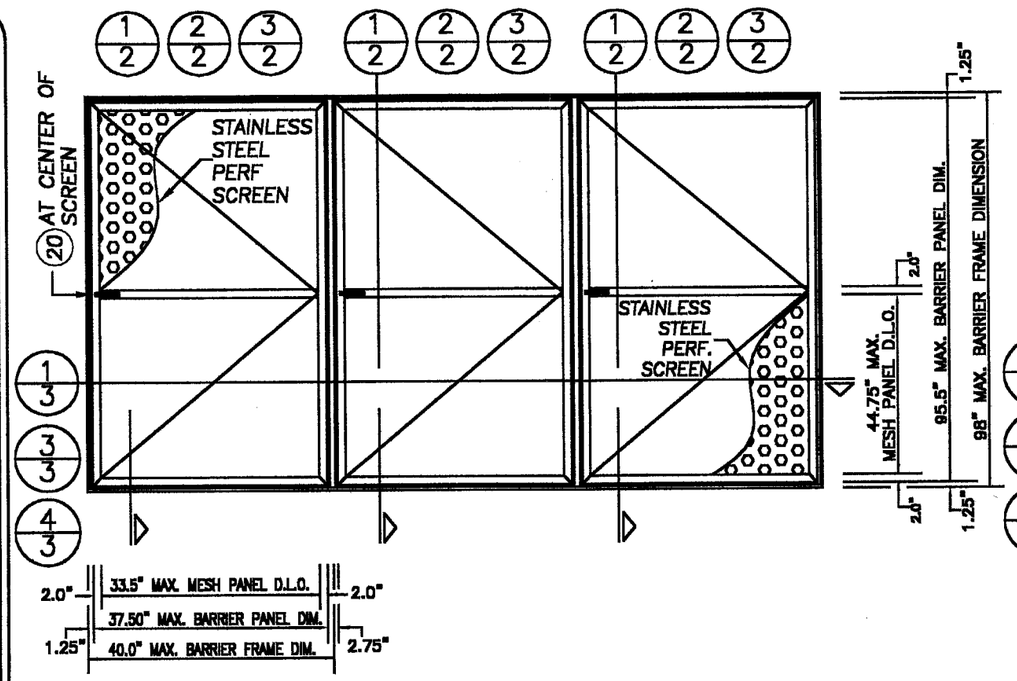

MULTIPLE PANEL EXTERIOR ELEVATION

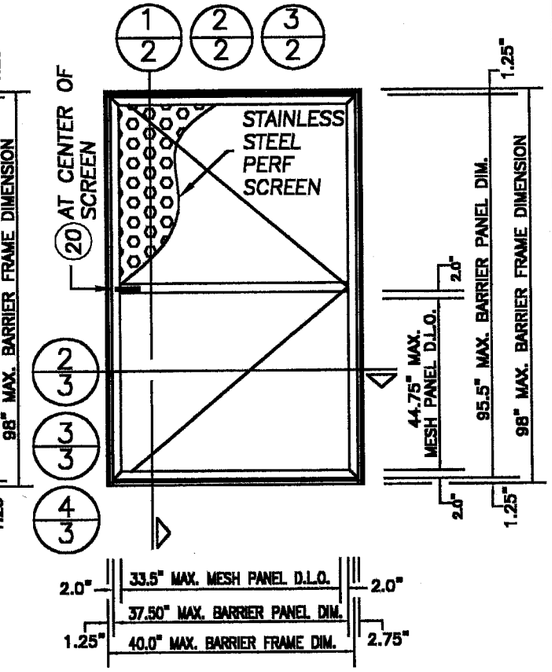

SINGLE PANEL EXTERIOR ELEVATION

NOTE: BARRIER SCREENS MAY BE USED AS SINGLE OR UNLIMITED NUMBER OF HORIZONTAL PANELS.

IMPACT RESISTANT SCREEN / PANEL CONSTRUCTION / SCREEN MATERIAL

FRAME CONSTRUCTION:

EXTRUDED ALUMINUM FRAME. THE CORNERS ARE MITERED BUTTED AND WELDED INCLUDING MIDHEIGHT RAIL CONNECTION TO JAMBS. USE ER5356 ELECTRODES. WELDING TO CONFORM WITH A.W.S. D1.2 1998 REGULATIONS.

PANEL CONSTRUCTION:

EACH PANEL IS MADE UP OF AN EXTRUDED 6063-T6 ALUM. FRAME MITERED AND ADDITIONALLY JOINED AT THE CORNERS WITH A 3.7" LONG "L" SHAPED ALUMINUM PLATE (SP-7), ITEM 17 AT BOM.

SCREEN MATERIAL:

14 GA. (0.078") STAINLESS STEEL AISI 304 H SERIES PER ASTM A240 – MIN. YIELD STRENGTH 40,000 PSI. THE PERFORATED SCREEN IS 0.1875" CLEAR HOLES ON 0.25" STAGGERED CENTERS. THERE ARE 18.5 HOLES PER SQUARE INCH (51% OF SCREEN IS POROUS). FOR FASTENING OF SCREEN REFER TO NOTE 1 SHEET 6. MINIMUM EDGE DISTANCE PER FASTENING SCREWS/EDGE OF SCREEN IS 1/2", MEASURED FROM CENTER OF HOLES.

THE OPERABLE PANELS ARE SECURED WITH A CONTINUOUS LATCH 11 MECHANISM EXTRUDED FROM ALUMINUM. PLUS A SURFACE BOLT & STRIKE PLATE 20 AT CENTER OF SCREEN (SEE ELEVATIONS).

INDEX

SHEET	DESCRIPTION
1	GENERAL NOTES & TYPICAL ELEVATIONS
2	VERTICAL CROSS SECTIONS
3	HORIZONTAL CROSS SECTIONS
4	ANCHOR LOCATIONS
5	COMPONENTS
6	METAL TO METAL FASTENING NOTES & BILL OF MATERIALS

Approved as complying with the Florida Building Code
Date 12/02/2004
NOA# 04-1006.07
Miami Dade Product Control Division
By: [signature]
MIAMI-DADE COUNTY

[signature]
OCT 05 2004
P.E. SEAL/SIGNATURE/DATE

© 2004 TILTECO, INC

TILTECO INC.
TILLIT TESTING & ENGINEERING COMPANY
6595 N.W. 36th. St., Ste. 217, VIRGINIA GARDENS, FLORIDA 33166
Phone : (305)871-1530 . Fax : (305)871-1531
e-mail: tilteco@aol.com
EB-0006719
WALTER A. TILLIT Jr., P. E.
FLORIDA Lic. # 44167

PHOENIX
ARCHITECTURAL PRODUCTS
SECURITY BARRIERS, ALUMINUM WINDOWS & DOORS
TEL 404.389.0103 FAX 404.389.0105

PRODUCT: PHOENIX ARCHITECTURAL PRODUCTS SURE GUARD PLUS WINDOW SECURITY BARRIER SYSTEM

SURE GUARD PLUS
WINDOW SECURITY BARRIER SYSTEM

NO.	DATE	REVISIONS	BY

DATE: 09/13/2004
SCALE: N.T.S.
DWG. BY: —
CHK. BY: —
DRAWING NO.: S101-01
SHEET 1 OF 6

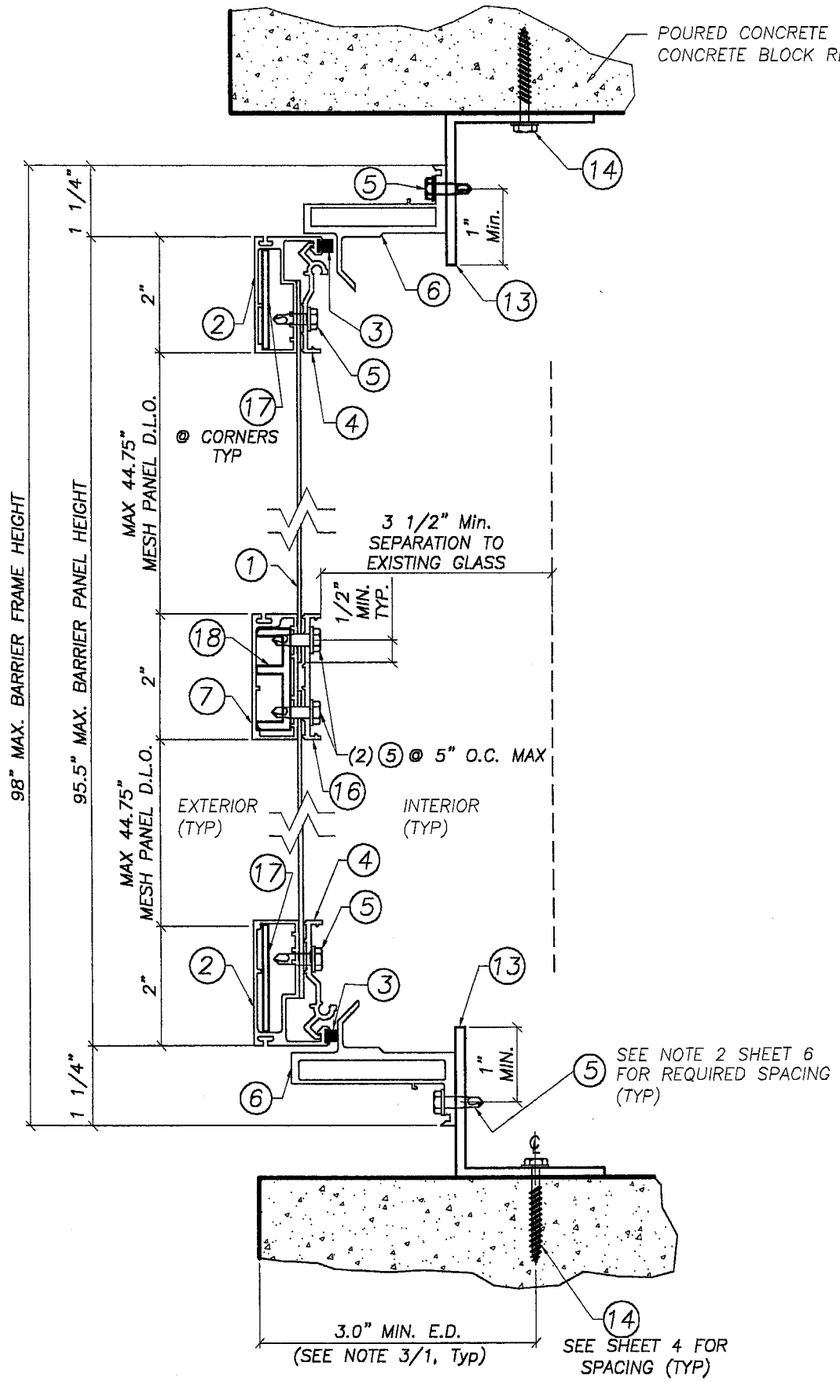

1 VERTICAL CROSS SECTION
Side Hinge

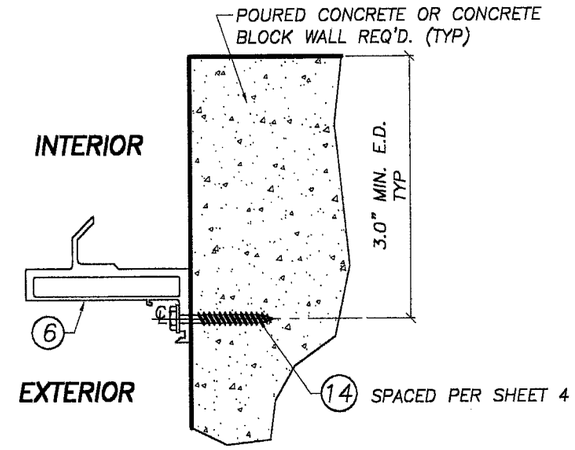

2 VERTICAL CROSS SECTION
Optional Surface Mount Method
Side Hinge

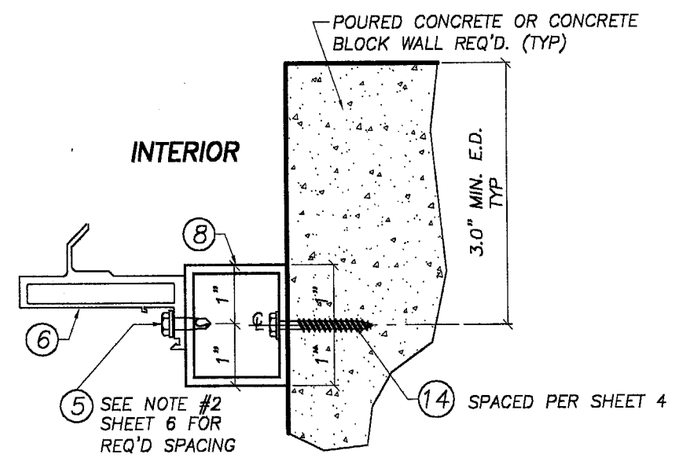

EXTERIOR

3 VERTICAL CROSS SECTION
Optional Buildout Mount Method
Side Hinge

Approved as complying with the Florida Building Code
Date 12/02/2004
NOA# 04-1006.07
Miami Dade Product Control Division
By
MIAMI-DADE COUNTY

OCT 0 5 2004
P.E. SEAL/SIGNATURE/DATE

© 2004 TILTECO, INC

TILTECO INC.
TILLIT TESTING & ENGINEERING COMPANY
6595 N.W. 36th. St., Ste. 217, VIRGINIA GARDENS, FLORIDA 33166
Phone : (305)871-1530 . Fax : (305)871-1531
e-mail: tilteco@aol.com
EB-0006719
WALTER A. TILLIT Jr., P. E.
FLORIDA Lic. # 44167

PHOENIX
ARCHITECTURAL PRODUCTS
SECURITY BARRIERS, ALUMINUM WINDOWS & DOORS
TEL 404.389.0103 FAX 404.389.0105

PRODUCT: PHOENIX ARCHITECTURAL PRODUCTS SURE GUARD PLUS WINDOW SECURITY BARRIER SYSTEM

SURE GUARD PLUS
WINDOW SECURITY BARRIER SYSTEM

NO.	DATE	REVISIONS	BY

DATE: 09/13/04
SCALE: N.T.S.
DWG. BY: —
CHK. BY: —
DRAWING NO.: S101-01
SHEET 2 OF 6

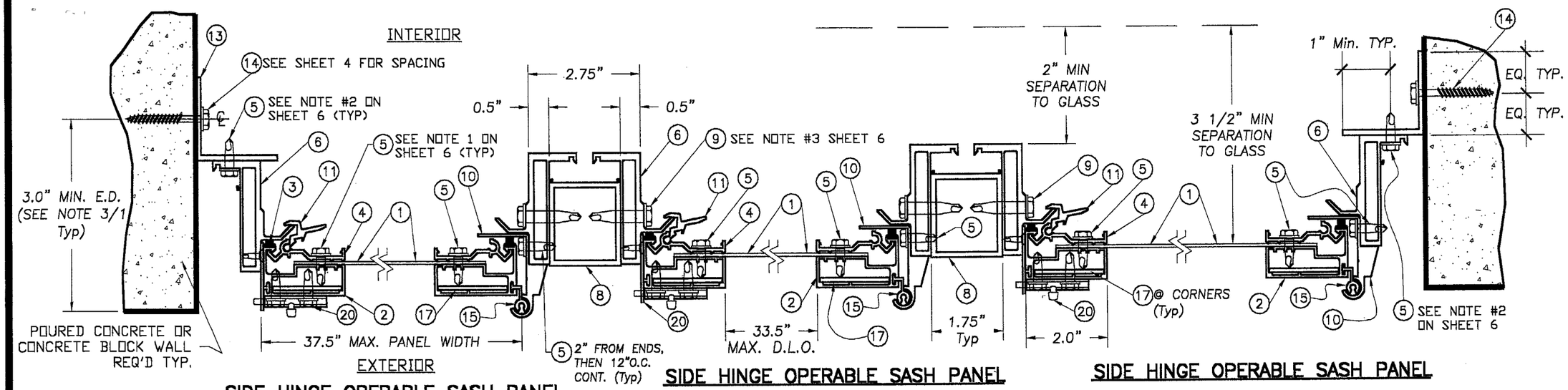

SIDE HINGE OPERABLE SASH PANEL

SIDE HINGE OPERABLE SASH PANEL

SIDE HINGE OPERABLE SASH PANEL

1 HORIZONTAL CROSS SECTION
Multiple Panels

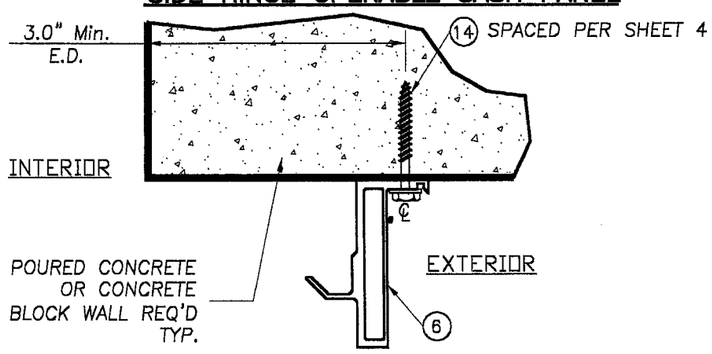

3 HORIZONTAL CROSS SECTION
OPTIONAL SURFACE MOUNT METHOD

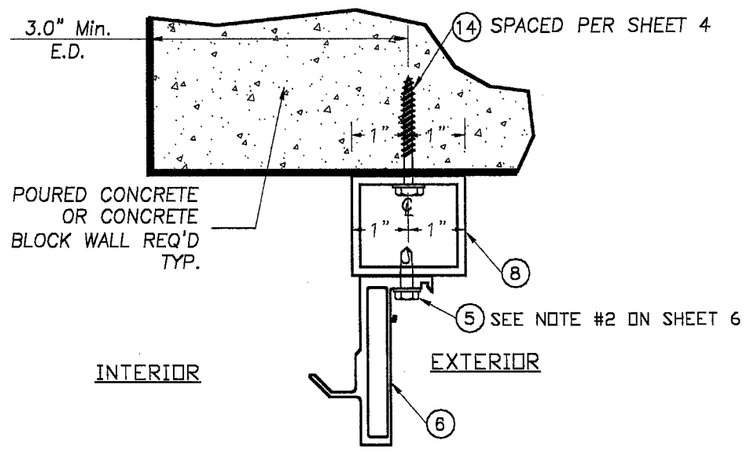

4 HORIZONTAL CROSS SECTION
OPTIONAL BUILDOUT MOUNT METHOD

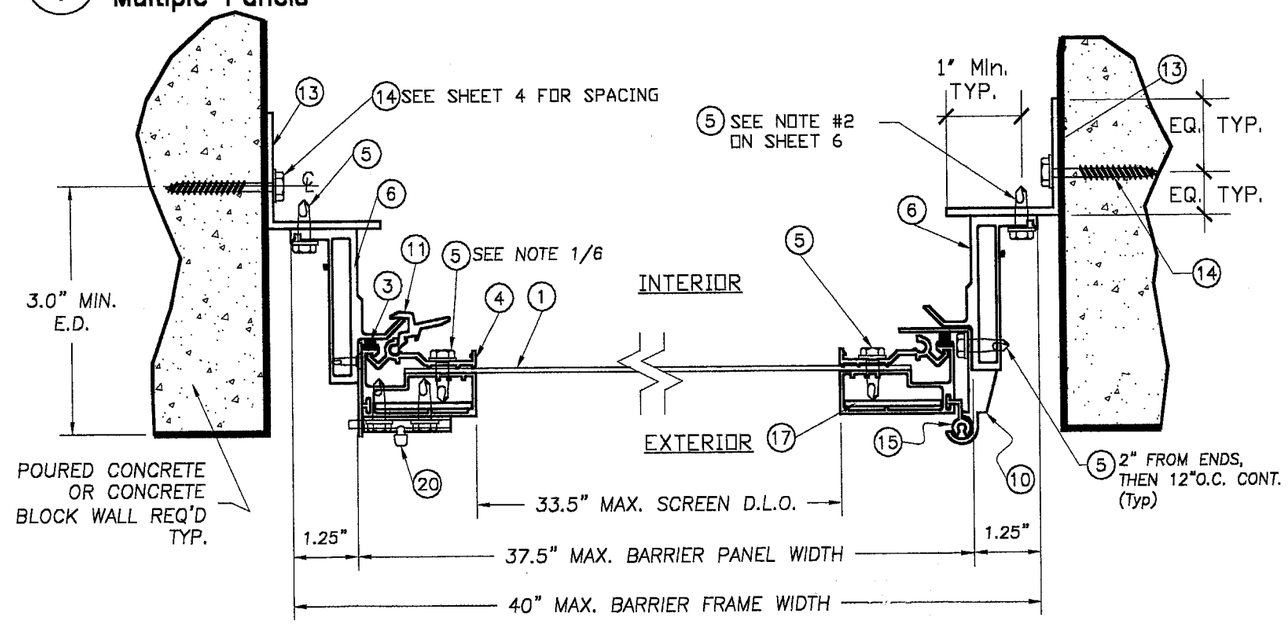

SIDE HINGE OPERABLE SASH PANEL

2 HORIZONTAL CROSS SECTION
Single Panel

Approved as complying with the Florida Building Code
Date 12/02/2004
NOA# 04-1006.07
Miami Dade Product Control Division
By Helmy A. Mek
MIAMI-DADE COUNTY

OCT 05 2004
P.E. SEAL/SIGNATURE/DATE

© 2004 TILTECO, INC

TILTECO INC.
TILLIT TESTING & ENGINEERING COMPANY
8585 N.W. 36th. St., Ste. 217, VIRGINIA GARDENS, FLORIDA 33166
Phone : (305)871-1530 . Fax : (305)871-1531
e-mail: tilteco@aol.com
EB-0008719
WALTER A. TILLIT Jr., P. E.
FLORIDA Lic. # 44167

PHOENIX
ARCHITECTURAL PRODUCTS
SECURITY BARRIERS, ALUMINUM WINDOWS & DOORS
TEL 404.389.0103 FAX 404.389.0105

PRODUCT: PHOENIX ARCHITECTURAL PRODUCTS SURE GUARD PLUS WINDOW SECURITY BARRIER SYSTEM

SURE GUARD PLUS
WINDOW SECURITY BARRIER SYSTEM

NO.	DATE	REVISIONS	BY

DATE: 09/13/04
SCALE: N.T.S.
DWG. BY: —
CHK. BY: —
DRAWING NO.: S101-01
SHEET 3 OF 6

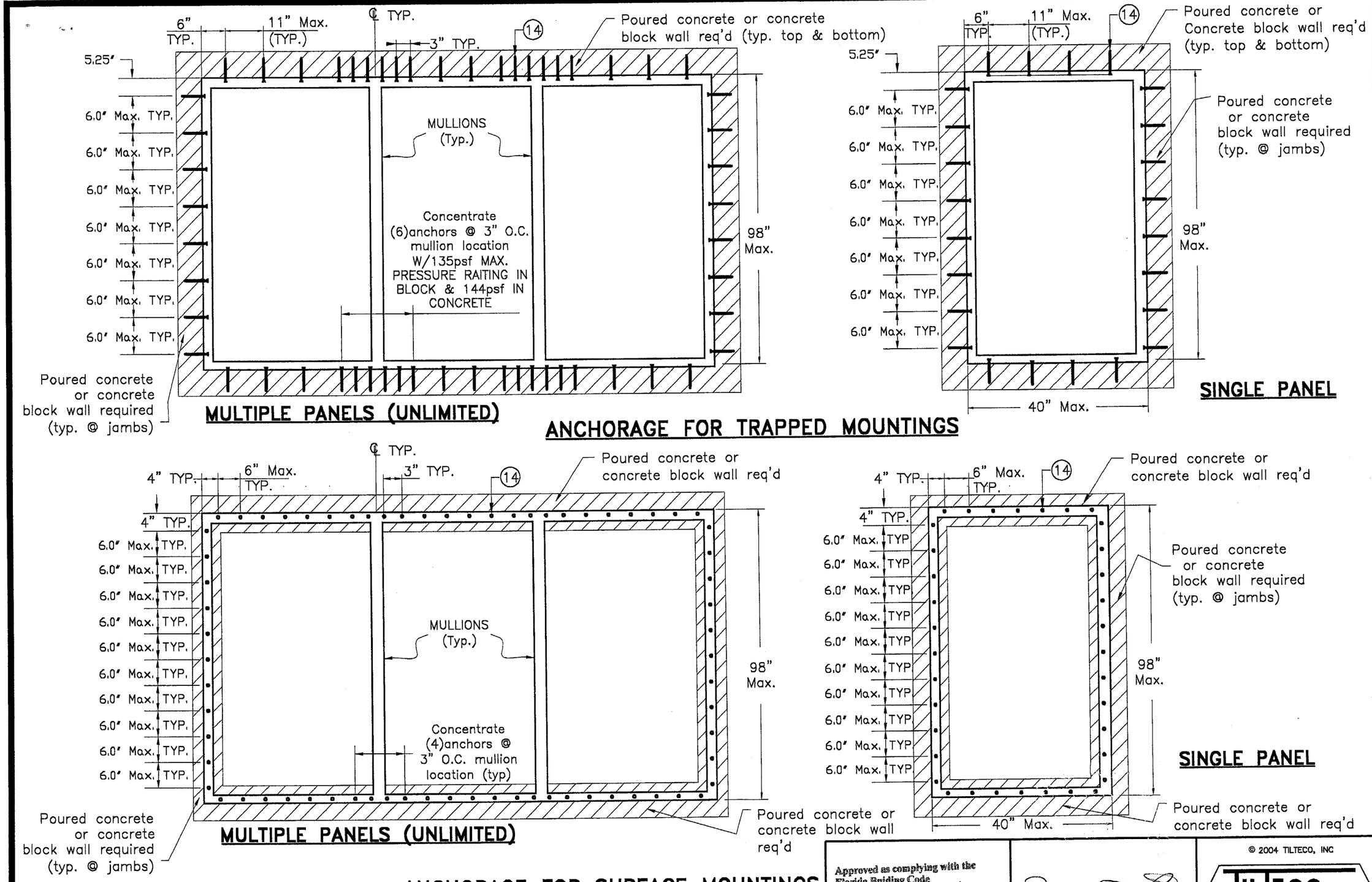

Approved as complying with the Florida Buiding Code
Date 12/02/2004
NOA# 04-1006.07
Miami Dade Product Control Division
By [signature]
MIAMI–DADE COUNTY

[signature]
OCT 0 5 2004
P.E. SEAL/SIGNATURE/DATE

© 2004 TILTECO, INC

TILTECO INC.
TILLIT TESTING & ENGINEERING COMPANY
6595 N.W. 36th. St., Ste. 217, VIRGINIA GARDENS, FLORIDA 33166
Phone : (305)871-1530 , Fax : (305)871-1531
e-mail: tilteco@aol.com
EB-0006719
WALTER A. TILLIT Jr., P. E.
FLORIDA Lic. # 44167

PHOENIX
ARCHITECTURAL PRODUCTS
SECURITY BARRIERS, ALUMINUM WINDOWS & DOORS
TEL 404.389.0103 FAX 404.389.0105

PRODUCT: PHOENIX ARCHITECTURAL PRODUCTS SURE GUARD PLUS WINDOW SECURITY BARRIER SYSTEM

SURE GUARD PLUS
WINDOW SECURITY BARRIER SYSTEM

NO.	DATE	REVISIONS	BY

DATE: 09/13/04
SCALE: N.T.S.
DWG. BY: —
CHK. BY: —
DRAWING NO.: S101-01
SHEET 4 OF 6

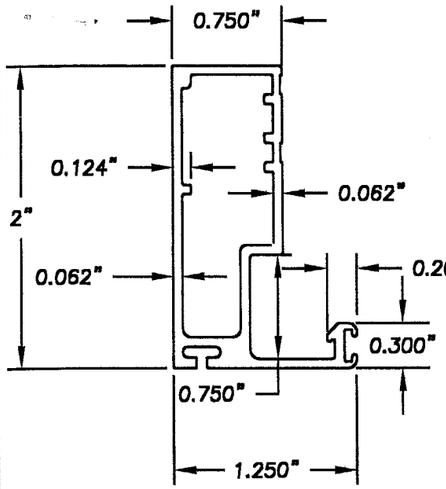

(2) CIE-3

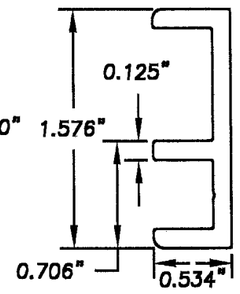

(18) CIE-13

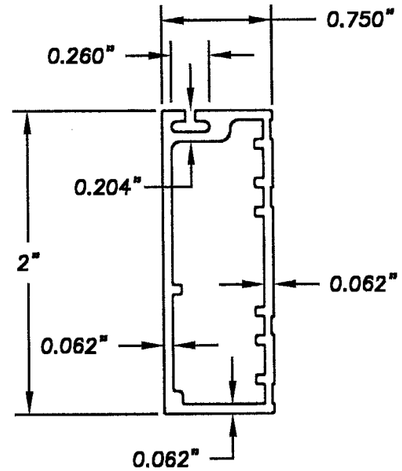

(7) CIE-6

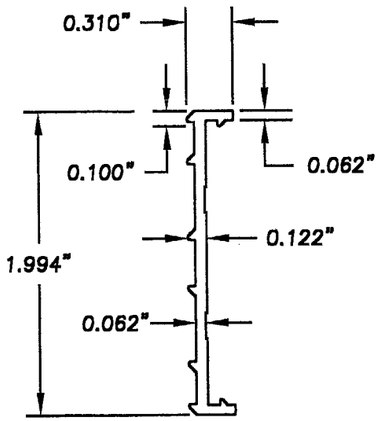

(16) CIE-7

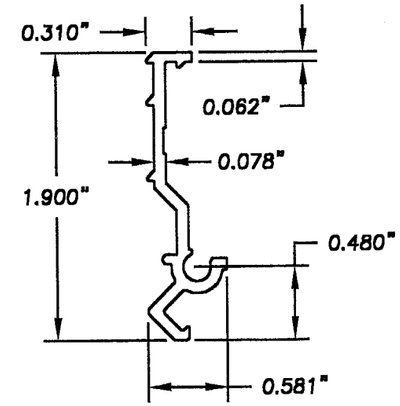

(4) CIE-4

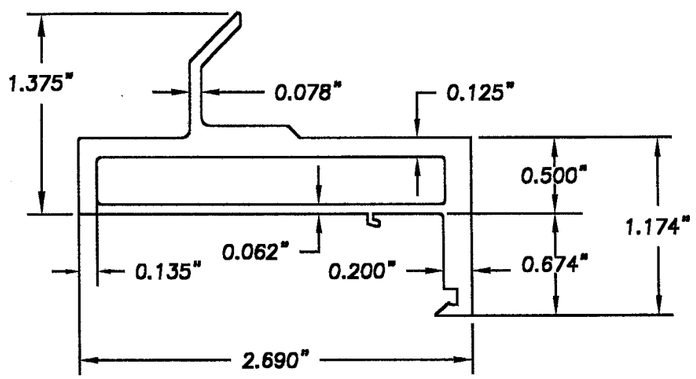

(6) CIE-12

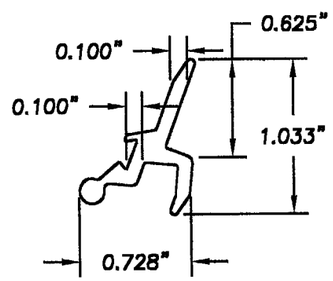

(11) CIE-8

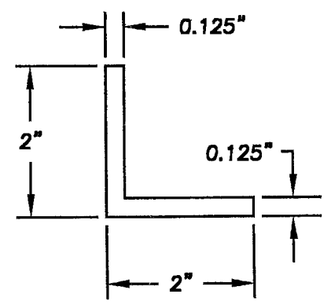

(13) "L BAR"

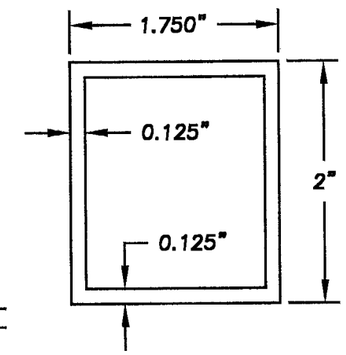

(8) EXT. ALUM. TUBE

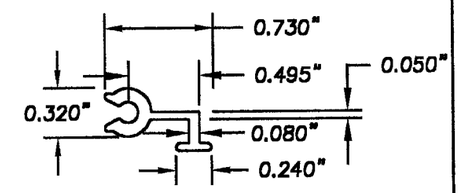

(15) CIE-1

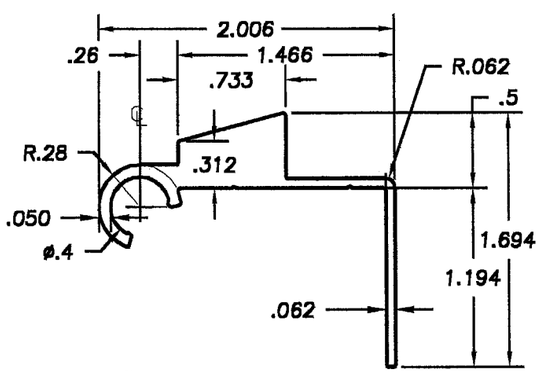

(10) CIE-5

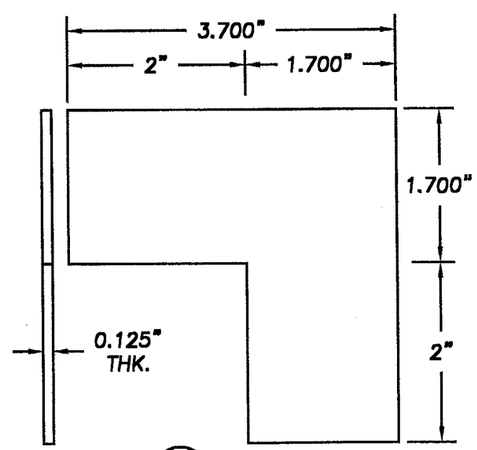

(17) SP-7

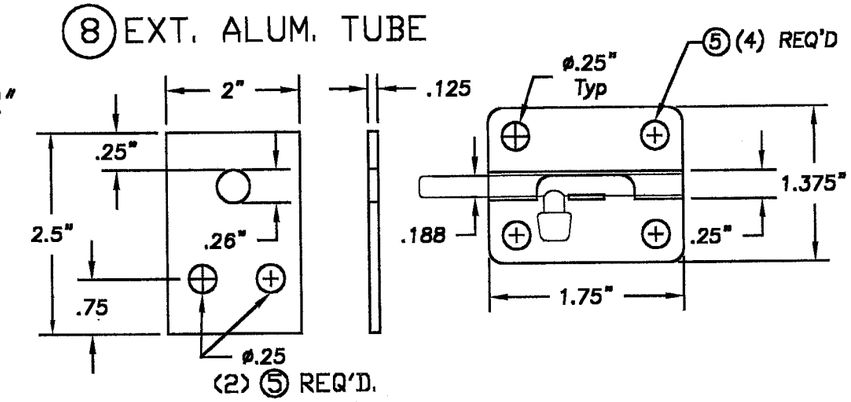

(20) SURFACE BOLT & STEEL STRIKE PLATE

Approved as complying with the Florida Building Code
Date 12/02/2004
NOAH 04-1606.07
Miami Dade Product Control Division
By
MIAMI-DADE COUNTY

OCT 0 5 2004

P.E. SEAL/SIGNATURE/DATE

© 2004 TILTECO, INC

TILTECO INC.
TILLIT TESTING & ENGINEERING COMPANY
6595 N.W. 36th. St., Ste. 217, VIRGINA GARDENS, FLORIDA 33166
Phone : (305)871-1530 , Fax : (305)871-1531
e-mail: tilteco@aol.com
EB-0006719
WALTER A. TILLIT Jr., P. E.
FLORIDA Lic. # 44167

PHOENIX
ARCHITECTURAL PRODUCTS
SECURITY BARRIERS, ALUMINUM WINDOWS & DOORS
TEL 404.389.0103 FAX 404.389.0105

PRODUCT: PHOENIX ARCHITECTURAL PRODUCTS SURE GUARD PLUS WINDOW SECURITY BARRIER SYSTEM

SURE GUARD PLUS

WINDOW SECURITY BARRIER SYSTEM

NO.	DATE	REVISIONS	BY

DATE: 09/13/04
SCALE: N.T.S.
DWG. BY: —
CHK. BY: —
DRAWING NO.: S101-01
SHEET 5 OF 6

METAL TO METAL SCREWS NOTES

NOTE: 1

FOUR SCREWS IN EACH CORNER LEG 2" FROM EA. END AND SPACED 2" O.C., THEN CONTINUOUS 6" O.C..

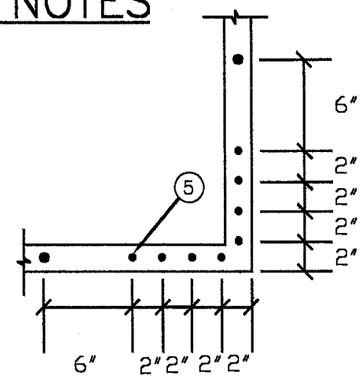

NOTE: 2

FIRST SCREW IS LOCATED AT 4" FROM EACH CORNER, THEN 6" O.C. CONTINUOUS

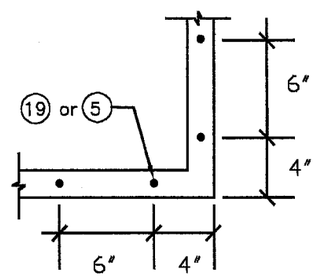

NOTE: 3

SCREWS 6" O.C. STAGGERED, SPACED 2.5" MAX. FROM TOP & BOTTOM.

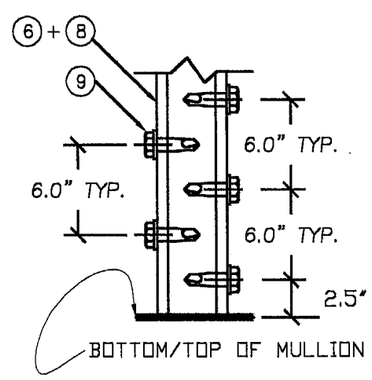

BILL OF MATERIALS

ITEM	DESCRIPTION	MATERIAL MANUFACTURER
1	Perforated Screen (Stainless Steel)	14 GA Stainless Steel
2	Sash Frame CIE-3	Alum. 6063-T6
3	Weather-strip #568 .25" (Hope Webbing)	Wool Pyle
4	Securing Flange CIE-4	Alum. 6063-T6
5	#10x5/8" STS Hex Head Screw	ASTM A-510
6	Frame Jamb CIE-12	Alum. 6063-T6
7	Horizontal Sash Support CIE-6	Alum. 6063-T6
8	1-3/4"x2"x1/8" Ext. Alum. Tube	Alum. 6063-T6
9	#14x1-1/4" Self Tapping Screw	ASTM A-510
10	Hinge Flange CIE-5	Alum. 6063-T6
11	Latch Mechanism CIE-8	Alum. 6063-T6
12	NOT USED	
13	"L" Bar .125" thick, each leg meas. 2.0"	Alum. 6063-T6
14	1/4"x1-3/4 Tapcon Anchor (min 1.25" embed. to block & 1.75" to concrete)	ITW BUILDEX
15	HINGE CIE-1	Alum. 6063-T6
16	HORIZONTAL SASH RETAINER CIE-7	Alum. 6063-T6
17	CORNER SUPPORT SP-7	Alum. 3003-H14
18	SASH SUPPORT CIE-13	Alum. 6063-T6
19	#10x1" STS Hex Head Screw	ASTM A-510
20	SURFACE BOLT & STEEL PLATE	BRAINERD MFG. CO. MODEL # B5210

Approved as complying with the Florida Building Code
Date 12/02/2004
NOA# 04-1006.07
Miami Dade Product Control Division
By

MIAMI-DADE COUNTY

OCT 0 5 2004

P.E. SEAL/SIGNATURE/DATE

© 2004 TILTECO, INC

TILTECO INC.
TILLIT TESTING & ENGINEERING COMPANY
6595 N.W. 36th. St., Ste. 217, VIRGINIA GARDENS, FLORIDA 33166
Phone : (305)871-1530 . Fax : (305)871-1531
e-mail: tilteco@aol.com
EB-0006719
WALTER A. TILLIT Jr., P. E.
FLORIDA Lic. # 44167

PHOENIX ARCHITECTURAL PRODUCTS
SECURITY BARRIERS, ALUMINUM WINDOWS & DOORS
TEL 404.389.0103 FAX 404.389.0105

PRODUCT: PHOENIX ARCHITECTURAL PRODUCTS SURE GUARD PLUS WINDOW SECURITY BARRIER SYSTEM

SURE GUARD PLUS
WINDOW SECURITY BARRIER SYSTEM

NO.	DATE	REVISIONS	BY

DATE: 03/25/2004
SCALE: N.T.S.
DWG. BY: —
CHK. BY: —
DRAWING NO.: S101-01
SHEET 6 OF 6