MIAMI-DADE COUNTY
BUILDING CODE COMPLIANCE OFFICE (BCCO)
PRODUCT CONTROL DIVISION

MIAMI-DADE COUNTY, FLORIDA
METRO-DADE FLAGLER BUILDING
140 WEST FLAGLER STREET, SUITE 1603
MIAMI, FLORIDA 33130-1563
(305) 375-2901 FAX (305) 375-2908

NOTICE OF ACCEPTANCE (NOA)

YKK AP America
332 Firetower Road
Dublin, GA 31021

SCOPE:

This NOA is being issued under the applicable rules and regulations governing the use of construction materials. The documentation submitted has been reviewed by Miami-Dade County Product Control Division and accepted by the Board of Rules and Appeals (BORA) to be used in Miami Dade County and other areas where allowed by the Authority Having Jurisdiction (AHJ).

This NOA shall not be valid after the expiration date stated below. The Miami-Dade County Product Control Division (In Miami Dade County) and/or the AHJ (in areas other than Miami Dade County) reserve the right to have this product or material tested for quality assurance purposes. If this product or material fails to perform in the accepted manner, the manufacturer will incur the expense of such testing and the AHJ may immediately revoke, modify, or suspend the use of such product or material within their jurisdiction. BORA reserves the right to revoke this acceptance, if it is determined by Miami-Dade County Product Control Division that this product or material fails to meet the requirements of the applicable building code.

This product is approved as described herein, and has been designed to comply with the Florida Building Code, including the High Velocity Hurricane Zone.

DESCRIPTION: Series YSD 700S Aluminum Sliding Glass Door

APPROVAL DOCUMENT: Drawing No. **W04-54**, titled "YSD700S Aluminum Sliding Glass Door (N.I.)", sheets 1 through 11 of 11, dated prepared by AL-Farooq Corporation, 06/14/04 with revision **"A"** on 12/07/04, signed and sealed by Humayoun Farooq, P.E., bearing the Miami-Dade County Product Control Approval stamp with the Notice of Acceptance number and approval date by the Miami-Dade County Product Control Division.

MISSILE IMPACT RATING: Non-Impact

LABELING: Each unit shall bear a permanent label with the manufacturer's name or logo, city, state and following statement: "Miami-Dade County Product Control Approved", unless otherwise noted herein.

RENEWAL of this NOA shall be considered after a renewal application has been filed and there has been no change in the applicable building code negatively affecting the performance of this product.

TERMINATION of this NOA will occur after the expiration date or if there has been a revision or change in the materials, use, and/or manufacture of the product or process. Misuse of this NOA as an endorsement of any product, for sales, advertising or any other purposes shall automatically terminate this NOA. Failure to comply with any section of this NOA shall be cause for termination and removal of NOA.

ADVERTISEMENT: The NOA number preceded by the words Miami-Dade County, Florida, and followed by the expiration date may be displayed in advertising literature. If any portion of the NOA is displayed, then it shall be done in its entirety.

INSPECTION: A copy of this entire NOA shall be provided to the user by the manufacturer or its distributors and shall be available for inspection at the job site at the request of the Building Official.
This NOA consists of this page 1 and evidence pages E-1, as well as approval document mentioned above.
The submitted documentation was reviewed by **Herminio F. Gonzalez, P.E., Director, BCCO**

PRODUCT CONTROL ACCEPTED

YKK AP American

NOTICE OF ACCEPTANCE: EVIDENCE SUBMITTED

A. DRAWINGS

1. Manufacturer's die drawings and sections.
2. Drawing No W04-54, titled "YSD700S Aluminum Sliding Glass Door (N.I.)", Sheets 1 through 11 of 11, prepared by AL-Farooq Corporation dated 06/14/04 with revision **"A"** on 12/07/04, signed and sealed by Humayoun Farooq, P.E.

B. TESTS

1. Test reports on 1) Air Infiltration Test, per FBC, TAS 202-94
   2) Uniform Static Air Pressure Test, Loading per FBC, TAS 202-94
   3) Water Resistance Test, per FBC, TAS 202-94
   4) Cyclic Wind Pressure Loading per FBC, TAS 203-94
   5) Forced Entry Test, per FBC 2411 3.2.1 (b) and TAS 202-94

   along with marked-up drawings and installation diagram of an aluminum sliding door, prepared by Hurricane Test Laboratory, LLC, Test Report No. **HTL-0231-1109-03** (specimen # 1, 2, 3, 4, 6, 7, & 9), dated 11/11-14/03, signed and sealed by Vinu J. Abraham, P.E.
2. Test reports on 1) Air Infiltration Test, per FBC, TAS 202-94
   2) Uniform Static Air Pressure Test, Loading per FBC, TAS 202-94
   3) Water Resistance Test, per FBC, TAS 202-94
   4) Forced Entry Test, per FBC 2411 3.2.1 (b) and TAS 202-94

   along with marked-up drawings and installation diagram of an aluminum sliding door, prepared Hurricane Test Laboratory, LLC, Inc., Test Report No. **HTL-0015-1109-03** (specimen # 8), dated 11/10-11/03, signed and sealed by Vinu J. Abraham, P.E.

C. CALCULATIONS

1. Comparative analysis and structural analysis, dated 07/29/04, prepared by AL-Farooq Corporation, signed and sealed by Humayoun Farooq, P.E.

D. QUALITY ASSURANCE

1. Miami Dade Building Code Compliance Office (BCCO).

E. MATERIAL CERTIFICATIONS

1. None

F. STATEMENTS

1. Statement letter of compliance and no financial interest, dated July 29, 2004, signed and sealed by Humayoun Farooq, P.E. of AL-Farooq Corporation.

G. OTHER

1. Letter from the consultant stating that the product is in compliance with the Florida Building Code.

for

Herminio F. Gonzalez, P.E.
Director, Building Code Compliance Office
NOA No 04-1013.07
Expiration Date: January 13, 2010
Approval Date: January 13, 2005

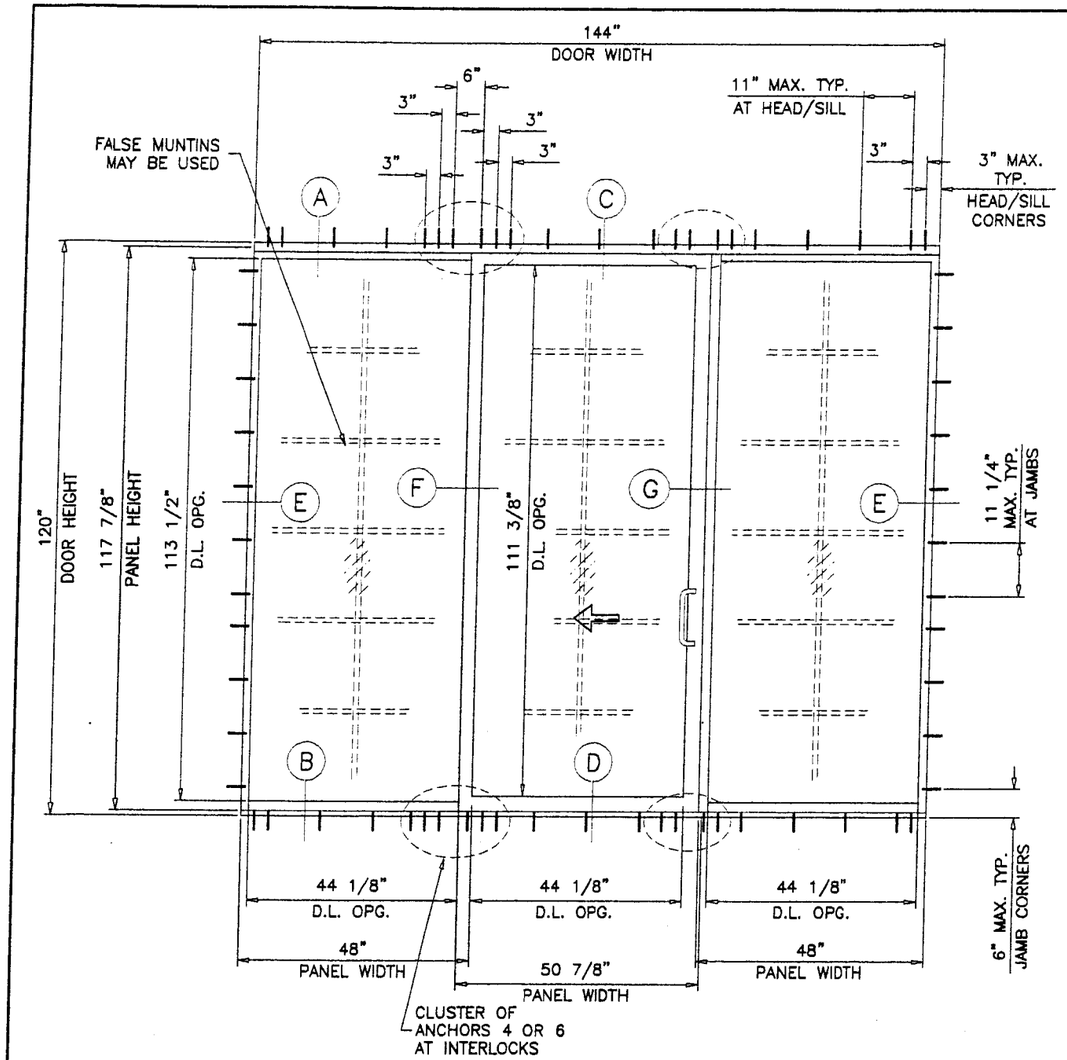

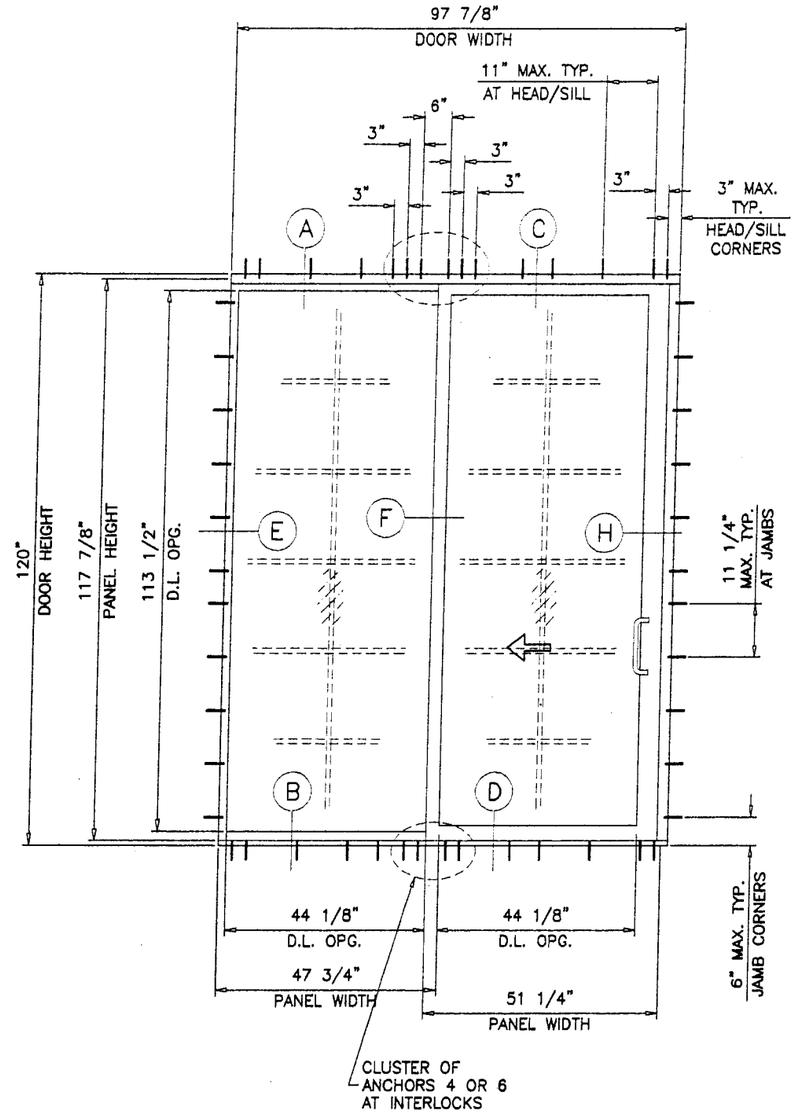

TYPICAL ELEVATIONS
TESTED UNITS

YSD700 ALUMINUM SLIDING GLASS DOOR (N.I.)

INSTALLATION OF THIS PRODUCT IN THE HVHZ AREA REQUIRES THE USE OF APPROVED SHUTTERS OR EXTERNAL PROTECTION DEVICES COMPLYING WITH HVHZ REQUIREMENTS.

INSTALLATION OF THIS SYSTEM OUTSIDE THE HVHZ AREA SHALL MEET THE APPLICABLE REQUIREMENTS FOR WIND BORNE DEBRIS PROTECTION.

DESIGN LOAD RATING FOR THESE DOORS TO BE AS PER CHARTS SHOWN ON SHEETS 3 THRU 5.

THIS PRODUCT HAS BEEN DESIGNED AND TESTED TO COMPLY WITH THE REQUIREMENTS OF THE FLORIDA BUILDING CODE INCLUDING HIGH VELOCITY HURRICANE ZONE.

WOOD BUCKS BY OTHERS, MUST BE ANCHORED PROPERLY TO TRANSFER LOADS TO THE STRUCTURE.

ANCHORS SHALL BE AS LISTED, SPACED AS SHOWN ON DETAILS. ANCHOR EMBEDMENT TO BASE MATERIAL SHALL BE BEYOND WALL DRESSING OR STUCCO.

ANCHORING OR LOADING CONDITIONS NOT SHOWN IN THESE DETAILS ARE NOT PART OF THIS APPROVAL.

A 33% INCREASE IN ALLOWABLE STRESS WAS USED IN DESIGN OF ANCHORS.

S.G.D. WITH MONOLITHIC GLASS
NON-IMPACT

Approved as complying with the
Florida Building Code
Date 01/13/05
NOA# 04-1013.07
Miami Dade Product Control
Division
By

Engr: DR. HUMAYOUN FAROOQ
STRUCTURES
FLA. PE # 16557
C.A.N. 3538

DEC 0 8 2004

AL-FAROOQ CORPORATION
ENGINEERS, PLANNERS & PRODUCT DESIGN
1235 SW 87 AVE
MIAMI, FLORIDA 33174
TEL. (305) 264-8100 FAX. (305) 262-6978
COMP-ANL\W04-54YKK

YSD700S ALUMINUM SLIDING GLASS DOOR (N.I.)

YKK AP AMERICA INC.
332 FIRETOWER ROAD
DUBLIN, GEORGIA 31021
TEL(478) 277-1955 FAX(478) 277-1978

revisions:

no	date	by	description
A	12.07.04		REV. PER BCCO COMMENTS

date: 06-14-04
scale: 3/8"=1'-0"
dr. by: HAMID
chk. by:

drawing no.
W04-54

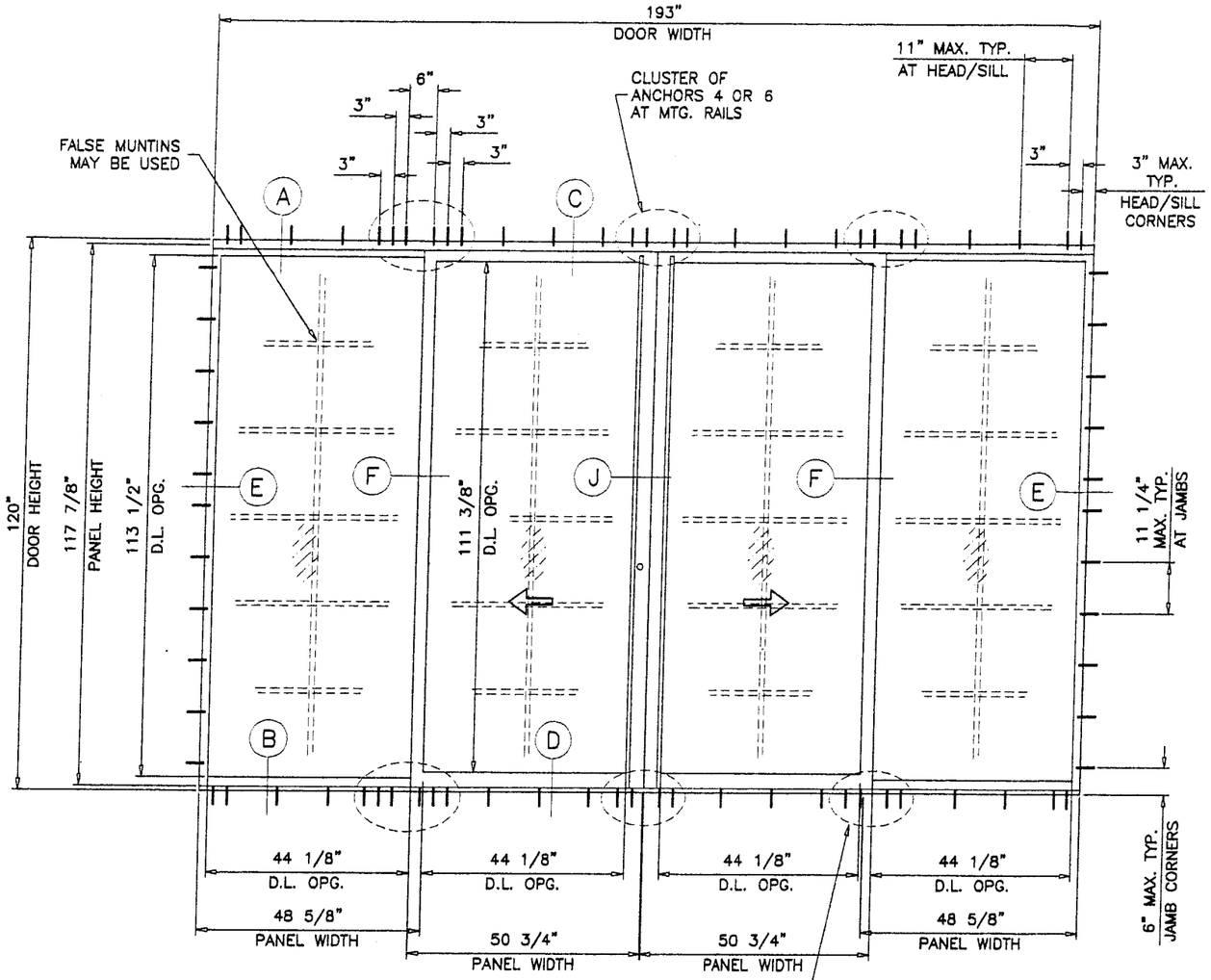

TYPICAL ELEVATION
TESTED UNIT

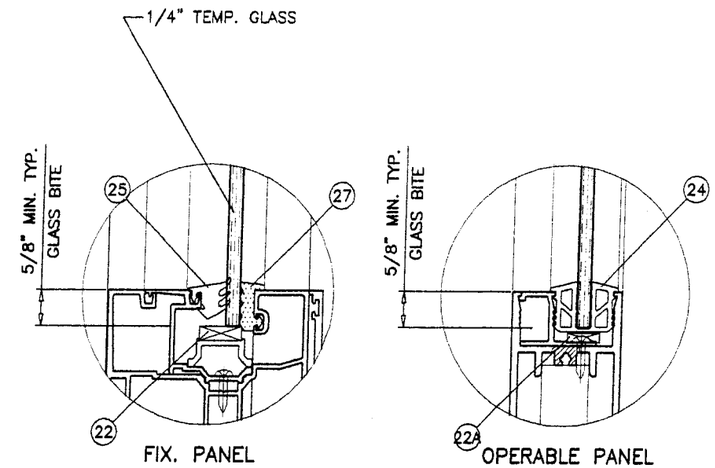

GLASS TYPE 'F'

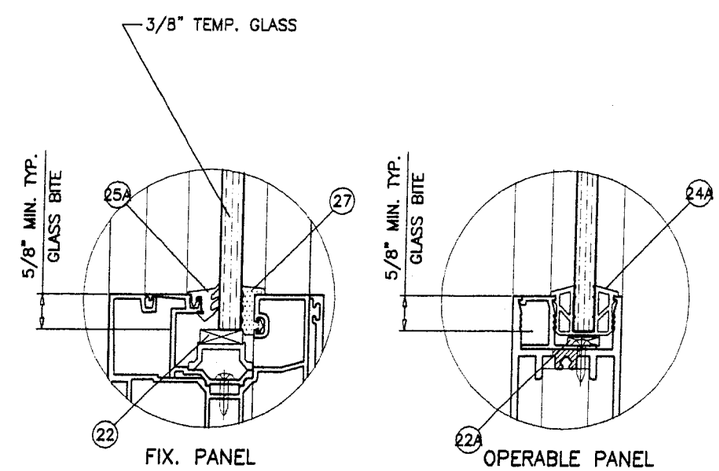

GLASS TYPE 'G'

Approved as complying with the
Florida Building Code
Date 01/13/05
NOA# 04-1013.07
Miami-Dade Product Control
Division
By

Engr: DR. HUMAYOUN FAROOQ
STRUCTURES
FLA. PE # 16557
C.A.N. 3538
DEC 0 8 2004

AL-FAROOQ CORPORATION
ENGINEERS, PLANNERS & PRODUCT DESIGN
1235 SW 87 AVE
MIAMI, FLORIDA 33174
TEL. (305) 264-8100 FAX. (305) 262-6978
COMP-ANL\W04-54YKK

YSD700S ALUMINUM SLIDING GLASS DOOR (N.L.)

YKK AP AMERICA INC.
332 FIRETOWER ROAD
DUBLIN, GEORGIA 31021
TEL.(478) 277-1955 FAX(478) 277-1978

revisions:			
no	date	by	description
A	12.07.04		REV. PER BCCO COMMENTS

date: 06-14-04
scale: 3/8"=1'-0"
dr. by: HAMID
chk. by:

drawing no.
W04-54

GLASS TYPE 'F'

DESIGN LOAD CAPACITY - PSF (DOORS WITHOUT REINFORCING)

PANEL WIDTH NOMINAL INCHES	DOOR HEIGHT INCHES	NO SHIMS		5/16" MAX. SHIM SPACE				3/8" MAX. SHIM SPACE											
		CLUSTER OF 4 ANCHORS		CLUSTER OF 4 ANCHORS				CLUSTER OF 4 ANCHORS						CLUSTER OF 6 ANCHORS					
		ANCHORS TYPE C		ANCHORS TYPE A2		ANCHORS TYPE B		ANCHORS TYPE A1		ANCHORS TYPE A2		ANCHORS TYPE B		ANCHORS TYPE A1		ANCHORS TYPE A2		ANCHORS TYPE B	
		EXT. (+)	INT. (-)	EXT. (+)	INT. (-)	EXT. (+)	INT. (-)	EXT. (+)	INT. (-)	EXT. (+)	INT. (-)	EXT. (+)	INT. (-)	EXT. (+)	INT. (-)	EXT. (+)	INT. (-)	EXT. (+)	INT. (-)
30	80	133.3	200.0	133.3	200.0	133.3	200.0	133.3	151.8	133.3	158.4	133.3	200.0	133.3	200.0	133.3	200.0	133.3	200.0
36		133.3	151.6	133.3	151.6	133.3	151.6	126.5	126.5	132.0	132.0	133.3	151.6	133.3	151.6	133.3	151.6	133.3	151.6
42		133.3	134.0	133.3	134.0	133.3	134.0	108.4	108.4	113.1	113.1	133.3	134.0	133.3	134.0	133.3	134.0	133.3	134.0
48		128.0	128.0	128.0	128.0	128.0	128.0	94.9	94.9	99.0	99.0	128.0	128.0	128.0	128.0	128.0	128.0	128.0	128.0
54		123.6	123.6	123.6	123.6	123.6	123.6	84.3	84.3	88.0	88.0	123.6	123.6	118.1	118.1	123.2	123.2	123.6	123.6
60		117.6	117.6	117.6	117.6	117.6	117.6	75.9	75.9	79.2	79.2	117.6	117.6	106.3	106.3	110.9	110.9	117.6	117.6
66		110.4	110.4	110.4	110.4	110.4	110.4	69.0	69.0	72.0	72.0	110.4	110.4	96.6	96.6	100.8	100.8	110.4	110.4
30	84	133.3	197.5	133.3	197.5	133.3	197.5	133.3	144.6	133.3	150.9	133.3	197.5	133.3	197.5	133.3	197.5	133.3	197.5
36		133.3	144.4	133.3	144.4	133.3	144.4	120.5	120.5	125.7	125.7	133.3	144.4	133.3	144.4	133.3	144.4	133.3	144.4
42		125.2	125.2	125.2	125.2	125.2	125.2	103.3	103.3	107.8	107.8	125.2	125.2	125.2	125.2	125.2	125.2	125.2	125.2
48		119.2	119.2	119.2	119.2	119.2	119.2	90.4	90.4	94.3	94.3	119.2	119.2	119.2	119.2	119.2	119.2	119.2	119.2
54		116.0	116.0	116.0	116.0	116.0	116.0	80.3	80.3	83.8	83.8	116.0	116.0	112.4	112.4	116.0	116.0	116.0	116.0
60		111.6	111.6	111.6	111.6	111.6	111.6	72.3	72.3	75.4	75.4	111.6	111.6	101.2	101.2	105.6	105.6	111.6	111.6
30	90	133.3	181.7	133.3	181.7	133.3	181.7	133.3	134.9	133.3	140.8	133.3	181.7	133.3	181.7	133.3	181.7	133.3	181.7
36		133.3	136.0	133.3	136.0	133.3	136.0	112.4	112.4	117.3	117.3	133.3	136.0	133.3	136.0	133.3	136.0	133.3	136.0
42		114.4	114.4	114.4	114.4	114.4	114.4	96.4	96.4	100.6	100.6	114.4	114.4	114.4	114.4	114.4	114.4	114.4	114.4
48		108.0	108.0	108.0	108.0	108.0	108.0	84.3	84.3	88.0	88.0	108.0	108.0	108.0	108.0	108.0	108.0	108.0	108.0
54		105.6	105.6	105.6	105.6	105.6	105.6	75.0	75.0	78.2	78.2	105.6	105.6	104.9	104.9	105.6	105.6	105.6	105.6
30	96	133.3	168.2	133.3	168.2	133.3	168.2	126.5	126.5	132.0	132.0	133.3	168.2	133.3	168.2	133.3	168.2	133.3	168.2
36		130.4	130.4	130.4	130.4	130.4	130.4	105.4	105.4	110.0	110.0	130.4	130.4	130.4	130.4	130.4	130.4	130.4	130.4
42		106.4	106.4	106.4	106.4	106.4	106.4	90.4	90.4	94.3	94.3	106.4	106.4	106.4	106.4	106.4	106.4	106.4	106.4
48		98.4	98.4	98.4	98.4	98.4	98.4	79.1	79.1	82.5	82.5	98.4	98.4	98.4	98.4	98.4	98.4	98.4	98.4
54		96.0	96.0	96.0	96.0	96.0	96.0	70.3	70.3	73.3	73.3	96.0	96.0	96.0	96.0	96.0	96.0	96.0	96.0
30	102	133.3	156.6	133.3	156.6	133.3	156.6	119.1	119.1	124.2	124.2	133.3	156.6	133.3	156.6	133.3	156.6	133.3	156.6
36		126.4	126.4	126.4	126.4	126.4	126.4	99.2	99.2	103.5	103.5	126.4	126.4	126.4	126.4	126.4	126.4	126.4	126.4
42		100.0	100.0	100.0	100.0	100.0	100.0	85.0	85.0	88.7	88.7	100.0	100.0	100.0	100.0	100.0	100.0	100.0	100.0
48		90.4	90.4	90.4	90.4	90.4	90.4	74.4	74.4	77.6	77.6	90.4	90.4	90.4	90.4	90.4	90.4	90.4	90.4
51		88.8	88.8	88.8	88.8	88.8	88.8	70.0	70.0	73.1	73.1	88.8	88.8	88.8	88.8	88.8	88.8	88.8	88.8
30	108	133.3	146.5	133.3	146.5	133.3	146.5	112.4	112.4	117.3	117.3	133.3	146.5	133.3	146.5	133.3	146.5	133.3	146.5
36		123.2	123.2	123.2	123.2	123.2	123.2	93.7	93.7	97.8	97.8	123.2	123.2	123.2	123.2	123.2	123.2	123.2	123.2
42		95.2	95.2	95.2	95.2	95.2	95.2	80.3	80.3	83.8	83.8	95.2	95.2	95.2	95.2	95.2	95.2	95.2	95.2
48		84.4	84.4	84.4	84.4	84.4	84.4	70.3	70.3	73.3	73.3	84.4	84.4	84.4	84.4	84.4	84.4	84.4	84.4
49		83.2	83.2	83.2	83.2	83.2	83.2	68.8	68.8	71.8	71.8	83.2	83.2	83.2	83.2	83.2	83.2	83.2	83.2
30	114	131.1	131.1	131.1	131.1	131.1	131.1	106.5	106.5	111.2	111.2	131.1	131.1	131.1	131.1	131.1	131.1	131.1	131.1
36		110.6	110.6	110.6	110.6	110.6	110.6	88.8	88.8	92.6	92.6	110.6	110.6	110.6	110.6	110.6	110.6	110.6	110.6
42		91.6	91.6	91.6	91.6	91.6	91.6	76.1	76.1	79.4	79.4	91.6	91.6	91.6	91.6	91.6	91.6	91.6	91.6
30	120	112.1	112.1	112.1	112.1	112.1	112.1	101.2	101.2	105.6	105.6	112.1	112.1	112.1	112.1	112.1	112.1	112.1	112.1
36		94.5	94.5	94.5	94.5	94.5	94.5	84.3	84.3	88.0	88.0	94.5	94.5	94.5	94.5	94.5	94.5	94.5	94.5
42		82.0	82.0	82.0	82.0	82.0	82.0	72.3	72.3	75.4	75.4	82.0	82.0	82.0	82.0	82.0	82.0	82.0	82.0

$$\text{PANEL WIDTH NOMINAL} = \frac{\text{DOOR WIDTH}}{\text{NUMBER OF PANELS}}$$

Approved as complying with the Florida Building Code
Date 01/13/05
NOA# 04-1013.07
Miami-Dade Product Control Division
By

Engr: DR. HUMAYOUN FAROOQ
STRUCTURES
FLA. PE # 16557
C.A.N. 3538

DEC 08 2004

AL-FAROOQ CORPORATION
ENGINEERS, PLANNERS & PRODUCT DESIGN
1235 SW 87 AVE
MIAMI, FLORIDA 33174
TEL. (305) 264-8100 FAX. (305) 262-6978
COMP-ANL\W04-54YKK

YS07005 ALUMINUM SLIDING GLASS DOOR (N.L.)

YKK ap™
YKK AP AMERICA INC.
332 FIRETOWER ROAD
DUBLIN, GEORGIA 31021
TEL(478) 277-1955 FAX(478) 277-1978

revisions:

no	date	by	description
A	12.07.04		NO CHANGE THIS SHEET

date: 06-14-04
scale: -
dr. by: HAMID
chk. by:

drawing no.
W04-54

GLASS TYPE 'G'

DESIGN LOAD CAPACITY – PSF (DOORS WITHOUT REINFORCING)

PANEL WIDTH NOMINAL INCHES	DOOR HEIGHT INCHES	NO SHIMS		5/16" MAX. SHIM SPACE				3/8" MAX. SHIM SPACE											
		CLUSTER OF 4 ANCHORS		CLUSTER OF 4 ANCHORS				CLUSTER OF 4 ANCHORS						CLUSTER OF 6 ANCHORS					
		ANCHORS TYPE C		ANCHORS TYPE A2		ANCHORS TYPE B		ANCHORS TYPE A1		ANCHORS TYPE A2		ANCHORS TYPE B		ANCHORS TYPE A1		ANCHORS TYPE A2		ANCHORS TYPE B	
		EXT. (+)	INT. (–)	EXT. (+)	INT. (–)	EXT. (+)	INT. (–)	EXT. (+)	INT. (–)	EXT. (+)	INT. (–)	EXT. (+)	INT. (–)	EXT. (+)	INT. (–)	EXT. (+)	INT. (–)	EXT. (+)	INT. (–)
30	80	133.3	200.0	133.3	200.0	133.3	200.0	133.3	151.8	133.3	158.4	133.3	200.0	133.3	200.0	133.3	200.0	133.3	200.0
36		133.3	200.0	133.3	200.0	133.3	200.0	126.5	126.5	132.0	132.0	133.3	200.0	133.3	177.1	133.3	184.8	133.3	200.0
42		133.3	198.0	133.3	198.0	133.3	198.0	108.4	108.4	113.1	113.1	133.3	183.9	133.3	151.8	133.3	158.4	133.3	198.0
48		133.3	182.5	133.3	182.5	133.3	182.5	94.9	94.9	99.0	99.0	133.3	160.9	132.8	132.8	133.3	138.6	133.3	182.5
54		133.3	171.4	133.3	171.4	133.3	171.4	84.3	84.3	88.0	88.0	133.3	143.0	118.1	118.1	123.2	123.2	133.3	171.4
60		133.3	163.5	133.3	163.5	133.3	163.5	75.9	75.9	79.2	79.2	128.7	128.7	106.3	106.3	110.9	110.9	133.3	163.5
66		131.8	158.1	131.8	158.1	131.8	158.1	69.0	69.0	72.0	72.0	117.0	117.0	96.6	96.6	100.8	100.8	131.8	158.1
30	84	133.3	200.0	133.3	200.0	133.3	200.0	133.3	144.6	133.3	150.9	133.3	200.0	133.3	200.0	133.3	200.0	133.3	200.0
36		133.3	206.4	133.3	206.4	133.3	206.4	120.5	120.5	125.7	125.7	133.3	200.0	133.3	168.7	133.3	176.0	133.3	206.4
42		133.3	185.4	133.3	185.4	133.3	185.4	103.3	103.3	107.8	107.8	133.3	175.1	133.3	144.6	133.3	150.9	133.3	185.4
48		133.3	170.3	133.3	170.3	133.3	170.3	90.4	90.4	94.3	94.3	133.3	153.2	126.5	126.5	132.0	132.0	133.3	170.3
54		132.8	159.4	132.8	159.4	132.8	159.4	80.3	80.3	83.8	83.8	132.8	136.2	112.4	112.4	117.3	117.3	132.8	159.4
60		126.2	151.4	126.2	151.4	126.2	151.4	72.3	72.3	75.4	75.4	122.6	122.6	101.2	101.2	105.6	105.6	126.2	151.4
30	90	133.3	200.0	133.3	200.0	133.3	200.0	133.3	134.9	133.3	140.8	133.3	200.0	133.3	188.9	133.3	197.1	133.3	200.0
36		133.3	189.2	133.3	189.2	133.3	189.2	112.4	112.4	117.3	117.3	133.3	189.2	133.3	157.4	133.3	164.3	133.3	189.2
42		133.3	169.3	133.3	169.3	133.3	169.3	96.4	96.4	100.6	100.6	133.3	163.4	133.3	134.9	133.3	140.8	133.3	169.3
48		129.0	154.8	129.0	154.8	129.0	154.8	84.3	84.3	88.0	88.0	129.0	143.0	118.1	118.1	123.2	123.2	129.0	154.8
54		120.2	144.2	120.2	144.2	120.2	144.2	75.0	75.0	78.2	78.2	120.2	127.1	104.9	104.9	109.5	109.5	120.2	144.2
30	96	133.3	200.0	133.3	200.0	133.3	200.0	126.5	126.5	132.0	132.0	133.3	200.0	133.3	177.1	133.3	184.8	133.3	200.0
36		133.3	174.7	133.3	174.7	133.3	174.7	105.4	105.4	110.0	110.0	133.3	174.7	133.3	147.6	133.3	154.0	133.3	174.7
42		129.8	155.7	129.8	155.7	129.8	155.7	90.4	90.4	94.3	94.3	129.8	153.2	126.5	126.5	129.8	132.0	129.8	155.7
48		118.3	141.9	118.3	141.9	118.3	141.9	79.1	79.1	82.5	82.5	118.3	134.1	110.7	110.7	115.5	115.5	118.3	141.9
54		109.7	131.7	109.7	131.7	109.7	131.7	70.3	70.3	73.3	73.3	109.7	119.2	98.4	98.4	102.7	102.7	109.7	131.7
30	102	133.3	187.9	133.3	187.9	133.3	187.9	119.1	119.1	124.2	124.2	133.3	187.9	133.3	166.7	133.3	173.9	133.3	187.9
36		133.3	162.2	133.3	162.2	133.3	162.2	99.2	99.2	103.5	103.5	133.3	162.2	133.3	138.9	133.3	144.9	133.3	162.2
42		120.2	144.2	120.2	144.2	120.2	144.2	85.0	85.0	88.7	88.7	120.2	144.2	119.1	119.1	120.2	124.2	120.2	144.2
48		109.2	131.0	109.2	131.0	109.2	131.0	74.4	74.4	77.6	77.6	109.2	126.2	104.2	104.2	108.7	108.7	109.2	131.0
51		100.0	120.0	100.0	120.0	100.0	120.0	70.0	70.0	73.1	73.1	100.0	118.8	98.0	98.0	100.0	102.3	100.0	120.0
30	108	133.3	175.8	133.3	175.8	133.3	175.8	112.4	112.4	117.3	117.3	133.3	175.8	133.3	157.4	133.3	164.3	133.3	175.8
36		126.2	151.4	126.2	151.4	126.2	151.4	93.7	93.7	97.8	97.8	126.2	151.4	126.2	131.2	126.2	136.9	126.2	151.4
42		111.9	134.2	111.9	134.2	111.9	134.2	80.3	80.3	83.8	83.8	111.9	134.2	111.9	112.4	111.9	117.3	111.9	134.2
48		101.4	121.7	101.4	121.7	101.4	121.7	70.3	70.3	73.3	73.3	101.4	119.2	98.4	98.4	101.4	102.7	101.4	121.7
49		99.9	119.9	99.9	119.9	99.9	119.9	68.8	68.8	71.8	71.8	99.9	116.7	96.4	96.4	99.9	100.6	99.9	119.9
30	114	131.1	157.3	131.1	157.3	131.1	157.3	106.5	106.5	111.2	111.2	131.1	157.3	131.1	149.1	131.1	155.6	131.1	157.3
36		110.6	132.7	110.6	132.7	110.6	132.7	88.8	88.8	92.6	92.6	110.6	132.7	110.6	124.3	110.6	129.7	110.6	132.7
42		96.2	115.5	96.2	115.5	96.2	115.5	76.1	76.1	79.4	79.4	96.2	115.5	96.2	106.5	96.2	111.2	96.2	115.5
30	120	112.1	134.5	112.1	134.5	112.1	134.5	101.2	101.2	105.6	105.6	112.1	134.5	112.1	134.5	112.1	134.5	112.1	134.5
36		94.5	113.3	94.5	113.3	94.5	113.3	84.3	84.3	88.0	88.0	94.5	113.3	94.5	113.3	94.5	113.3	94.5	113.3
42		82.0	98.4	82.0	98.4	82.0	98.4	72.3	72.3	75.4	75.4	82.0	98.4	82.0	98.4	82.0	98.4	82.0	98.4

$$\text{PANEL WIDTH NOMINAL} = \frac{\text{DOOR WIDTH}}{\text{NUMBER OF PANELS}}$$

Approved as complying with the Florida Building Code
Date 01/13/05
NOA# 04-1013.07
Miami-Dade Product Control Division
By M Shaikh

Engr: DR. HUMAYOUN FAROOQ
STRUCTURES
FLA. PE # 16557
C.A.N. 3538

DEC 0 8 2004

AL-FAROOQ CORPORATION
ENGINEERS, PLANNERS & PRODUCT DESIGN
1235 SW 87 AVE
MIAMI, FLORIDA 33174
TEL (305) 264-8100 FAX. (305) 262-6978
COMP-ANL\W04-54YKK

YSD700S ALUMINUM SLIDING GLASS DOOR (N.I.)

YKK AP AMERICA INC.
332 FIRETOWER ROAD
DUBLIN, GEORGIA 31021
TEL(478) 277-1955 FAX(478) 277-1978

revisions:

no	date	by	description
A	12.07.04		NO CHANGE THIS SHEET

date: 06-14-04
scale: –
dr. by: HAMID
chk. by:

drawing no. W04-54

GLASS TYPE 'G'

DESIGN LOAD CAPACITY – PSF (DOORS WITH REINFORCING)

PANEL WIDTH NOMINAL INCHES	DOOR HEIGHT INCHES	NO SHIMS		5/16" MAX. SHIM SPACE				3/8" MAX. SHIM SPACE											
		CLUSTER OF 4 ANCHORS		CLUSTER OF 4 ANCHORS				CLUSTER OF 4 ANCHORS						CLUSTER OF 6 ANCHORS					
		ANCHORS TYPE C		ANCHORS TYPE A2		ANCHORS TYPE B		ANCHORS TYPE A1		ANCHORS TYPE A2		ANCHORS TYPE B		ANCHORS TYPE A1		ANCHORS TYPE A2		ANCHORS TYPE B	
		EXT. (+)	INT. (–)	EXT. (+)	INT. (–)	EXT. (+)	INT. (–)	EXT. (+)	INT. (–)	EXT. (+)	INT. (–)	EXT. (+)	INT. (–)	EXT. (+)	INT. (–)	EXT. (+)	INT. (–)	EXT. (+)	INT. (–)
30	80	133.3	200.0	133.3	200.0	133.3	200.0	133.3	151.8	133.3	158.4	133.3	200.0	133.3	200.0	133.3	200.0	133.3	200.0
36		133.3	200.0	133.3	200.0	133.3	200.0	126.5	126.5	132.0	132.0	133.3	200.0	133.3	177.1	133.3	184.8	133.3	200.0
42		133.3	200.0	133.3	200.0	133.3	200.0	108.4	108.4	113.1	113.1	133.3	183.9	133.3	151.8	133.3	158.4	133.3	200.0
48		133.3	200.0	133.3	200.0	133.3	200.0	94.9	94.9	99.0	99.0	133.3	160.9	132.8	132.8	133.3	138.6	133.3	200.0
54		133.3	194.0	133.3	194.0	133.3	194.0	84.3	84.3	88.0	88.0	133.3	143.0	118.1	118.1	123.2	123.2	133.3	194.0
60		133.3	185.0	133.3	180.0	133.3	184.8	75.9	75.9	79.2	79.2	128.7	128.7	106.3	106.3	110.9	110.9	133.3	180.2
66		133.3	178.9	133.3	163.6	133.3	168.0	69.0	69.0	72.0	72.0	117.0	117.0	96.6	96.6	100.8	100.8	133.3	163.8
72		133.3	166.8	133.3	150.0	133.3	154.0	63.3	63.3	66.0	66.0	107.3	107.3	88.6	88.6	92.4	92.4	133.3	150.2
30	84	133.3	200.0	133.3	200.0	133.3	200.0	133.3	144.6	133.3	150.9	133.3	200.0	133.3	200.0	133.3	200.0	133.3	200.0
36		133.3	200.0	133.3	200.0	133.3	200.0	120.5	120.5	125.7	125.7	133.3	200.0	133.3	168.7	133.3	176.0	133.3	200.0
42		133.3	200.0	133.3	200.0	133.3	200.0	103.3	103.3	107.8	107.8	133.3	175.1	133.3	144.6	133.3	150.9	133.3	200.0
48		133.3	192.7	133.3	192.7	133.3	192.7	90.4	90.4	94.3	94.3	133.3	153.2	126.5	126.5	132.0	132.0	133.3	192.7
54		133.3	180.3	133.3	180.3	133.3	180.3	80.3	80.3	83.8	83.8	133.3	136.2	112.4	112.4	117.3	117.3	133.3	180.3
60		133.3	171.3	133.3	171.3	133.3	171.3	72.3	72.3	75.4	75.4	122.6	122.6	101.2	101.2	105.6	105.6	133.3	171.3
66		133.3	164.9	133.3	155.8	133.3	160.0	65.7	65.7	68.6	68.6	111.4	111.4	92.0	92.0	96.0	96.0	133.3	156.0
30	90	133.3	200.0	133.3	200.0	133.3	200.0	133.3	134.9	133.3	140.8	133.3	200.0	133.3	188.9	133.3	197.1	133.3	200.0
36		133.3	200.0	133.3	200.0	133.3	200.0	112.4	112.4	117.3	117.3	133.3	190.7	133.3	157.4	133.3	164.3	133.3	200.0
42		133.3	191.5	133.3	191.5	133.3	191.5	96.4	96.4	100.6	100.6	133.3	163.4	133.3	134.9	133.3	140.8	133.3	191.5
48		133.3	175.2	133.3	175.2	133.3	175.2	84.3	84.3	88.0	88.0	133.3	143.0	118.1	118.1	123.2	123.2	133.3	175.2
54		133.3	163.2	133.3	163.2	133.3	163.2	75.0	75.0	78.2	78.2	127.1	127.1	104.9	104.9	109.5	109.5	133.3	163.2
60		128.5	154.2	128.5	154.2	128.5	154.2	67.5	67.5	70.4	70.4	114.4	114.4	94.5	94.5	98.6	98.6	128.5	154.2
30	96	133.3	200.0	133.3	200.0	133.3	200.0	126.5	126.5	132.0	132.0	133.3	200.0	133.3	177.1	133.3	184.8	133.3	200.0
36		133.3	197.7	133.3	197.7	133.3	197.7	105.4	105.4	110.0	110.0	133.3	178.8	133.3	147.6	133.3	154.0	133.3	197.7
42		133.3	176.2	133.3	176.2	133.3	176.2	90.4	90.4	94.3	94.3	133.3	153.2	126.5	126.5	132.0	132.0	133.3	176.2
48		133.3	160.6	133.3	160.6	133.3	160.6	79.1	79.1	82.5	82.5	133.3	134.1	110.7	110.7	115.5	115.5	133.3	160.6
54		124.2	149.0	124.2	149.0	124.2	149.0	70.3	70.3	73.3	73.3	119.2	119.2	98.4	98.4	102.7	102.7	124.2	149.0
60		116.8	140.2	116.8	140.2	116.8	140.2	63.3	63.3	66.0	66.0	107.3	107.3	88.6	88.6	92.4	92.4	116.8	140.2
30	102	133.3	200.0	133.3	200.0	133.3	200.0	119.1	119.1	124.2	124.2	133.3	200.0	133.3	166.7	133.3	173.9	133.3	200.0
36		133.3	183.6	133.3	183.6	133.3	183.6	99.2	99.2	103.5	103.5	133.3	168.2	133.3	138.9	133.3	144.9	133.3	183.6
42		133.3	163.2	133.3	163.2	133.3	163.2	85.0	85.0	88.7	88.7	133.3	144.2	119.1	119.1	124.2	124.2	133.3	163.2
48		123.6	148.3	123.6	148.3	123.6	148.3	74.4	74.4	77.6	77.6	123.6	126.2	104.2	104.2	108.7	108.7	123.6	148.3
54		114.2	137.1	114.2	137.1	114.2	137.1	66.1	66.1	69.0	69.0	112.2	112.2	92.6	92.6	96.6	96.6	114.2	137.1
30	108	133.3	199.0	133.3	199.0	133.3	199.0	112.4	112.4	117.3	117.3	133.3	190.7	133.3	157.4	133.3	164.3	133.3	199.0
36		133.3	171.3	133.3	171.3	133.3	171.3	93.7	93.7	97.8	97.8	133.3	158.9	131.2	131.2	133.3	136.9	133.3	171.3
42		126.6	151.9	126.6	151.9	126.6	151.9	80.3	80.3	83.8	83.8	126.6	136.2	112.4	112.4	117.3	117.3	126.6	151.9
48		114.7	137.7	114.7	137.7	114.7	137.7	70.3	70.3	73.3	73.3	114.7	119.2	98.4	98.4	102.7	102.7	114.7	137.7
30	114	133.3	186.9	133.3	186.9	133.3	186.9	106.5	106.5	111.2	111.2	133.3	180.6	133.3	149.1	133.3	155.6	133.3	186.9
36		133.3	160.6	133.3	160.6	133.3	160.6	88.8	88.8	92.6	92.6	133.3	150.5	124.3	124.3	129.7	129.7	133.3	160.6
42		118.4	142.1	118.4	142.1	118.4	142.1	76.1	76.1	79.4	79.4	118.4	129.0	106.5	106.5	111.2	111.2	118.4	142.1
48		107.1	128.5	107.1	128.5	107.1	128.5	66.6	66.6	69.5	69.5	107.1	112.9	93.2	93.2	97.3	97.3	107.1	128.5
51		102.5	123.0	102.5	123.0	102.5	123.0	62.7	62.7	65.4	65.4	102.5	106.3	87.7	87.7	91.5	91.5	102.5	123.0
30	120	133.3	176.2	133.3	176.2	133.3	176.2	101.2	101.2	105.6	105.6	133.3	171.6	133.3	141.7	133.3	147.8	133.3	176.2
36		126.0	151.2	126.0	151.2	126.0	151.2	84.3	84.3	88.0	88.0	126.0	143.0	118.1	118.1	123.2	123.2	126.0	151.2
42		111.3	133.5	111.3	133.5	111.3	133.5	72.3	72.3	75.4	75.4	111.3	122.6	101.2	101.2	105.6	105.6	111.3	133.5
48		100.4	120.5	100.4	120.5	100.4	120.5	63.3	63.3	66.0	66.0	100.4	107.3	88.6	88.6	92.4	92.4	100.4	120.5
49		98.6	118.4	98.6	118.4	98.6	118.4	62.0	62.0	64.7	64.7	98.6	105.1	86.7	86.7	90.5	90.5	98.6	118.4

$$\text{PANEL WIDTH NOMINAL} = \frac{\text{DOOR WIDTH}}{\text{NUMBER OF PANELS}}$$

Approved as complying with the Florida Buiding Code
Date 01/13/05
NOA# 04-1013.02
Miami-Dade Product Control Division
By

Engr: DR. HUMAYOUN FAROOQ
STRUCTURES
FLA. PE # 16557
C.A.N. 3638

DEC 0 8 2004

AL-FAROOQ CORPORATION
ENGINEERS, PLANNERS & PRODUCT DESIGN
1235 SW 87 AVE
MIAMI, FLORIDA 33174
TEL. (305) 264-8100 FAX. (305) 262-6978
COMP-ANL\W04-54YKK

YSD700S ALUMINUM SLIDING GLASS DOOR (N.I.)

YKK AP AMERICA INC.
332 FIRETOWER ROAD
DUBLIN, GEORGIA 31021
TEL(478) 277-1955 FAX(478) 277-1978

revisions:

no	date	by	description
A	12.07.04		NO CHANGE THIS SHEET

date: 06-14-04
scale: –
dr. by: HAMID
chk. by:

drawing no. W04-54

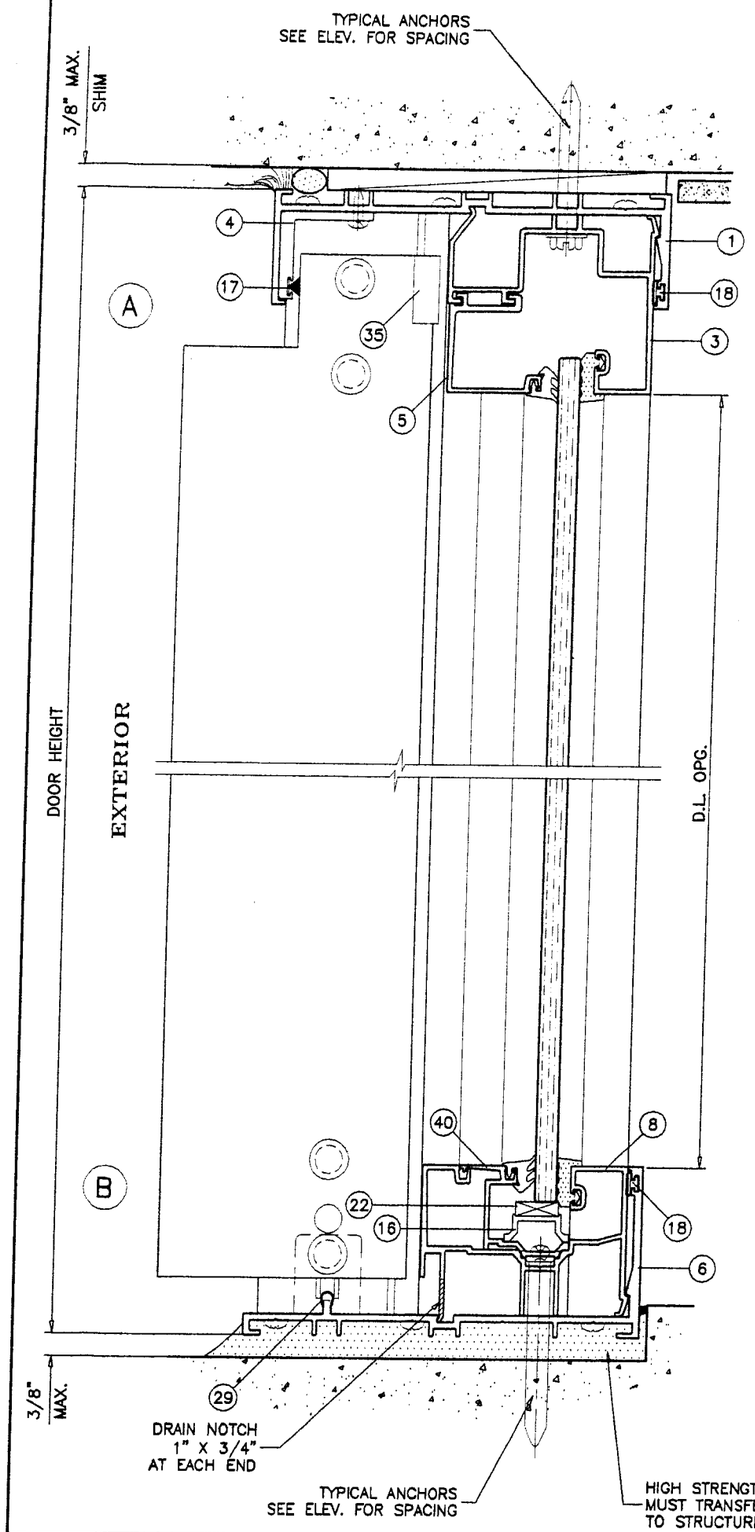

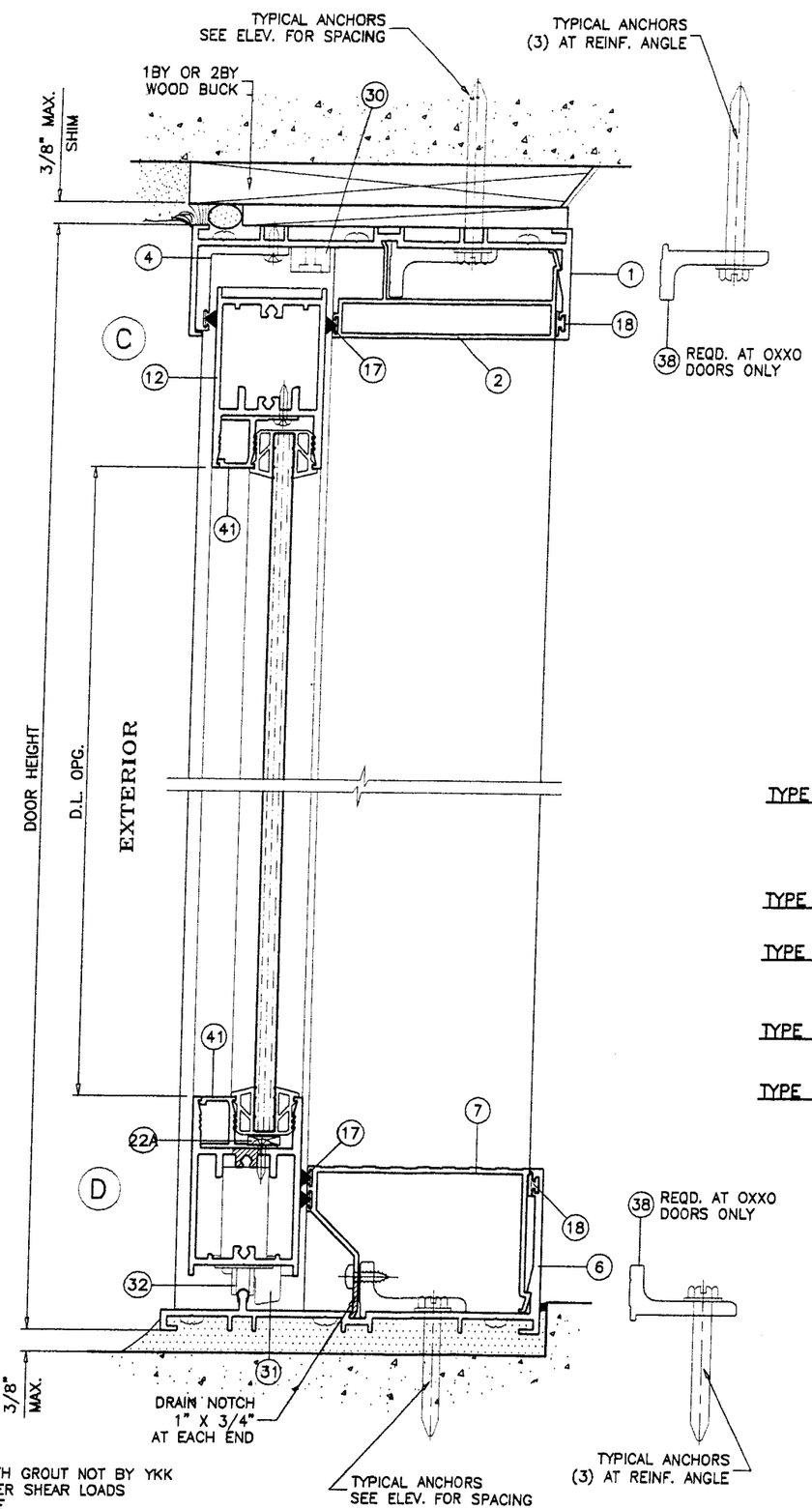

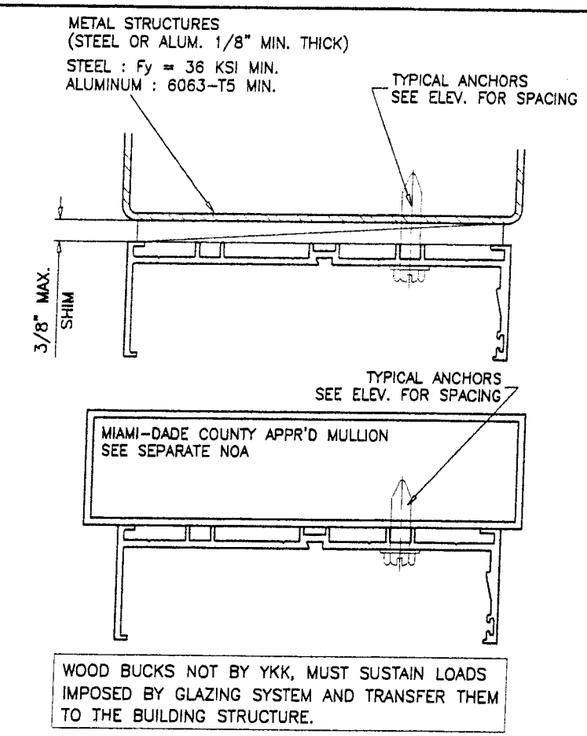

WOOD BUCKS NOT BY YKK, MUST SUSTAIN LOADS IMPOSED BY GLAZING SYSTEM AND TRANSFER THEM TO THE BUILDING STRUCTURE.

TYPICAL ANCHORS: SEE ELEV./CHART FOR SPACING

5/16" DIA TAPCONS

TYPE A1 INTO WOOD STRUCTURE
1-3/4" MIN. PENETRATION INTO WOOD
THRU 1BY OR 2BY WOOD BUCKS INTO MASONRY OR CONC.
1-1/2" MIN. EMBED INTO MASONRY OR CONC.

TYPE A2 DIRECTLY INTO CONCRETE
1-1/4" MIN. EMBED INTO CONCRETE

TYPE A3 DIRECTLY INTO MASONRY
1-1/4" MIN. EMBED INTO MASONRY

5/16" DRILLFLEX SELF DRILLING SCREWS

TYPE B INTO METAL STRUCTURES (1/8" MIN. THICKNESS)

#14 SMS

TYPE C INTO APPROVED MULLIONS (NO SHIM SPACE)

TYPICAL EDGE DISTANCE

INTO CONCRETE AND MASONRY = 3" MIN.
INTO WOOD STRUCTURES = 1-1/4" MIN.

SEALANTS:

FRAME AND PANEL CORNERS SEALED WITH TREMCO SPECTRUM 2 OR G.E. SILLGLAZE SEALANT.

Engr: DR. HUMAYOUN FAROOQ
STRUCTURES
FLA. PE # 16557
C.A.N. 3538

DEC 0 8 2004

Approved as complying with the Florida Building Code
Date 01/13/05
NOA# 04-1013.02
Miami Dade Product Control Division
By

AL-FAROOQ CORPORATION
ENGINEERS, PLANNERS & PRODUCT DESIGN
1235 SW 87 AVE
MIAMI, FLORIDA 33174
TEL. (305) 264-8100 FAX. (305) 262-6978
COMP-ANL\W04-54YKK

YKK AP AMERICA INC.
332 FIRETOWER ROAD
DUBLIN, GEORGIA 31021
TEL(478) 277-1955 FAX(478) 277-1978

YSD700S ALUMINUM SLIDING GLASS DOOR (N.I.)

revisions:

no	date	by	description
A	12.07.04		REV. PER BCCO COMMENTS

date: 06-14-04
scale: 3/8" = 1"
dr. by: HAMID
chk. by:

drawing no. W04-54

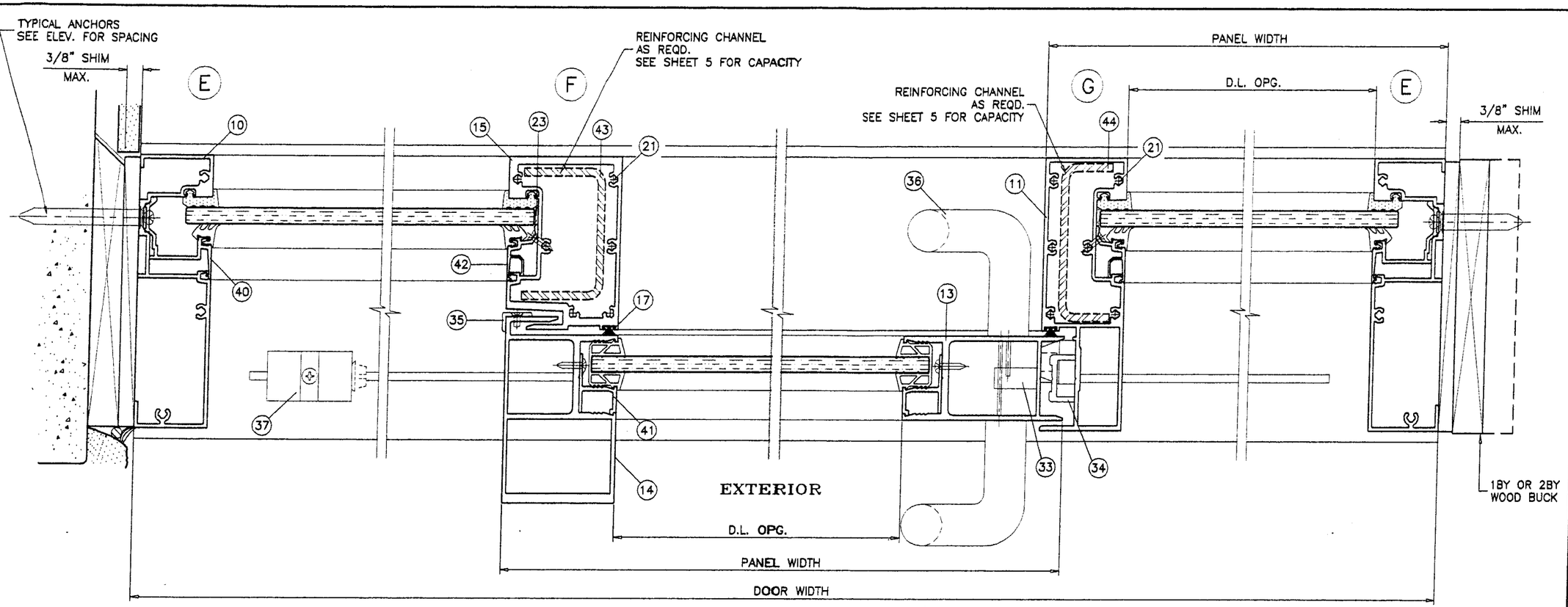

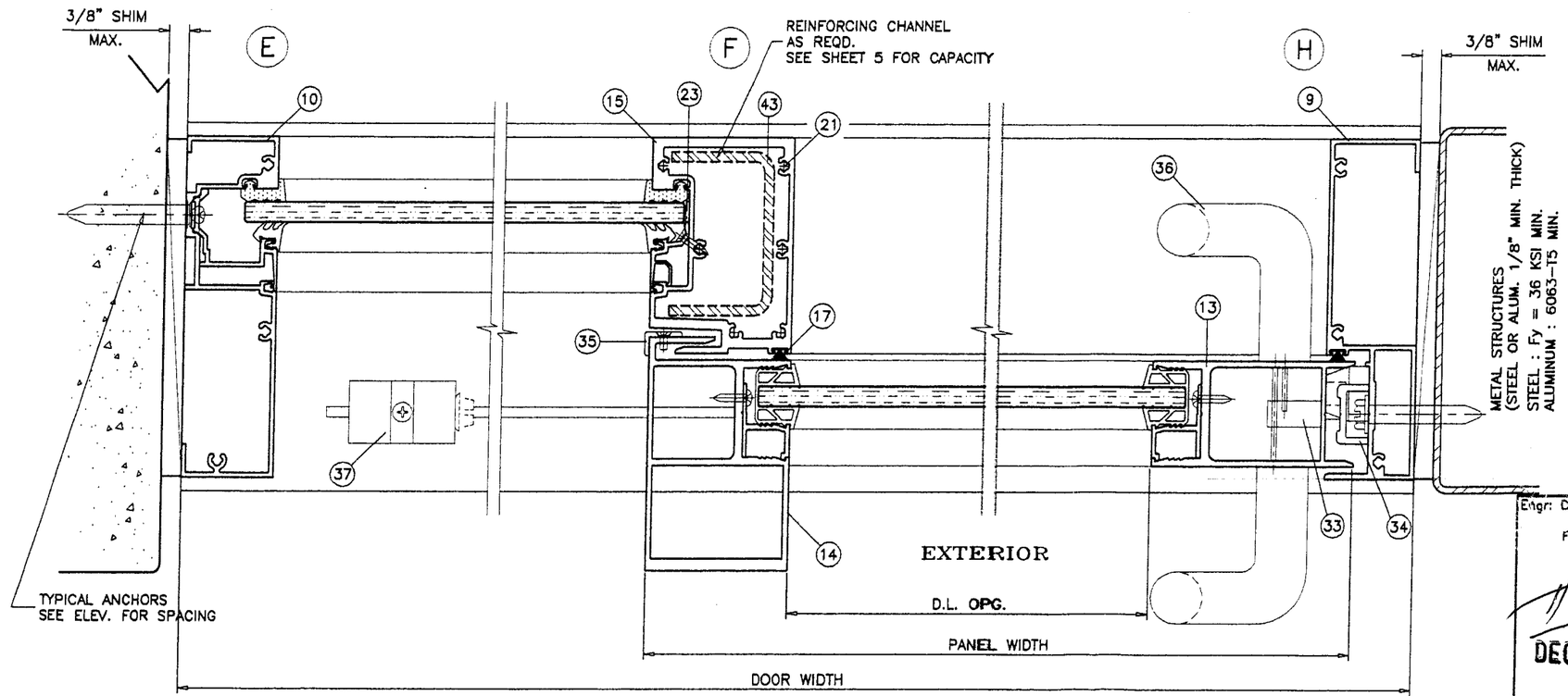

Engr: DR. HUMAYOUN FAROOQ
STRUCTURES
FLA. PE # 16557
C.A.N. 3538

DEC 0 8 2004

Approved as complying with the
Florida Buiding Code
Date 01/13/05
NOA# 04-1013.07
Miami-Dade Product Control
Division
By

YSD700S ALUMINUM SLIDING GLASS DOOR (N.I.)

YKK AP AMERICA INC.
332 FIRETOWER ROAD
DUBLIN, GEORGIA 31021
TEL(478) 277-1955 FAX(478) 277-1978

AL-FAROOQ CORPORATION
ENGINEERS, PLANNERS & PRODUCT DESIGN
1235 SW 87 AVE
MIAMI, FLORIDA 33174
TEL. (305) 264-8100 FAX. (305) 262-6978
COMP-ANL\W04-54YKK

revisions:

no	date	by	description
A	12.07.04		NO CHANGE THIS SHEET

date: 06-14-04
scale: 3/8" = 1"
dr. by: HAMID
chk. by:

drawing no.
W04-54

sheet 7 of 11

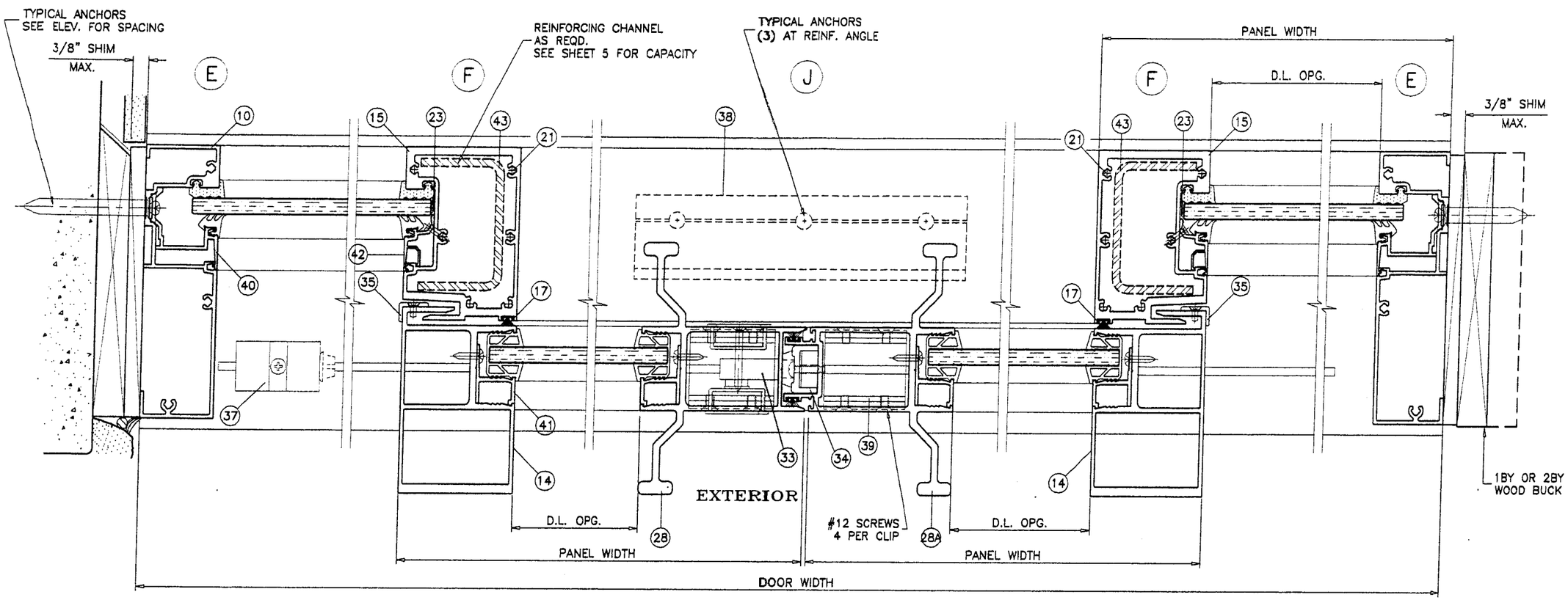

Engr: DR. HUMAYOUN FAROOQ
STRUCTURES
FLA. PE # 16557
C.A.N. 3538

DEC 08 2004

Approved as complying with the
Florida Building Code
Date 01/13/05
NOA# 04-1013.07
Miami-Dade Product Control
Division
By

AL-FAROOQ CORPORATION
ENGINEERS, PLANNERS & PRODUCT DESIGN
1235 SW 87 AVE
MIAMI, FLORIDA 33174
TEL. (305) 264-8100 FAX. (305) 262-6978
COMP-ANL\W04-54YKK

YSD700S ALUMINUM SLIDING GLASS DOOR (N.I.)

YKK AP AMERICA INC.
332 FIRETOWER ROAD
DUBLIN, GEORGIA 31021
TEL(478) 277-1955 FAX(478) 277-1978

revisions:

no	date	by	description
A	12.07.04		NO CHANGE THIS SHEET

date: 06-14-04
scale: 3/8" = 1"
dr. by: HAMID
chk. by:

drawing no.
W04-54

sheet 8 of 11

ITEM #	PART #	QUANTITY	DESCRIPTION	MATERIAL	MANF./SUPPLIER/REMARKS
1	E9-6101	1	FRAME HEAD	6063-T5	YKK AP AMERICA
2	E9-6110	1	HEAD ADAPTER (OPERABLE)	6063-T5	YKK AP AMERICA
3	E9-6107	AS REQD.	HEAD ADAPTER (FIXED)	6063-T5	YKK AP AMERICA
4	E9-6115	1	HEAD ADAPTER (EXTERIOR)	6063-T5	YKK AP AMERICA
5	E9-6123	AS REQD.	GLASS STOP	6063-T5	YKK AP AMERICA
6	E9-6102	1	FRAME SILL	6063-T5	YKK AP AMERICA
7	E9-6111	1	SILL ADAPTER (OPERABLE)	6063-T5	YKK AP AMERICA
8	E9-6108	AS REQD.	SILL ADAPTER (FIXED)	6063-T5	YKK AP AMERICA
9	E9-6104	AS REQD.	FRAME JAMB (OPERABLE)	6063-T5	YKK AP AMERICA
10	E9-6103	1	FRAME JAMB (FIXED)	6063-T5	YKK AP AMERICA
11	E9-6106	1	ASTRAGAL STILE	6063-T5	YKK AP AMERICA
12	E9-6112	2/ PANEL	TOP & BOTTOM RAIL	6063-T5	YKK AP AMERICA
13	E9-6114	1	JAMB STILE	6063-T5	YKK AP AMERICA
14	E9-6113	AS REQD.	INTERLOCK (OPERABLE)	6063-T5	YKK AP AMERICA
15	E9-6105	1	INTERLOCK (FIXED)	6063-T5	YKK AP AMERICA
16	E1-1621	2	SETTING BLOCK CHAIR, 4" LONG	6063-T5	YKK AP AMERICA
17	E2-0712	AS REQD.	PILE W'STRIPPING WITH FIN	–	–
18	E2-0051	AS REQD.	5/16" DIA. BULB W'STRIPPING	–	–
19	#12 X 1-1/4"	3/ CORNER	FRAME ASSEMBLY SCREWS	ST. STEEL	PH SMS
20	#12 X 1-1/4"	2/ CORNER	PANEL ASSEMBLY SCREWS	ST. STEEL	PH SMS
21	#12 X 1-1/4"	6/ END	ASTRAGAL/FIX. I'LOCK. ASSY. SCREWS	ST. STEEL	PH TS
22	E2-9902	AS REQD.	SETTING BLOCK	EPDM	–
22A	E2-0738	AS REQD.	SETTING BLOCK	EPDM	–
23	E2-0739	AS REQD.	SIDE BLOCK	EPDM	–
24	E2-0736	AS REQD.	OPER. PANEL GLAZING GASKET	EPDM	1/4" GLASS
24A	E2-0735	AS REQD.	OPER. PANEL GLAZING GASKET	EPDM	3/8" GLASS
25	E2-0081	AS REQD.	FIX. PANEL GLAZING GASKET	EPDM	1/4" GLASS
25A	E2-0082	AS REQD.	FIX. PANEL GLAZING GASKET	EPDM	3/8" GLASS
26	–	–	–	–	–
27	E2-0088	AS REQD.	FIX. PANEL GLAZING GASKET	–	–
28	E9-6117	1	FEMALE LOCK STILE	6063-T5	YKK AP AMERICA
28A	E9-6116	1	MALE LOCK STILE	6063-T5	YKK AP AMERICA
29	E1-1601	1	SILL TRACK COVER	ST. STEEL	–
30	E3-1162	2/ MOV. PANEL	FIX. PANEL STOP	POLYAMIDE 6	SECURED W/ (2) #8 X 1/2" PH TS
31	E1-1605	2/ MOV. PANEL	MOV. PANEL BLOCK	6063-T5	SECURED W/ (2) #8 X 1/2" PH TS
32	E1-1620	2/ MOV. PANEL	BALL BEARING ROLLER	ST. STEEL	–
33	MS-1850	1/ MOV. PANEL	MS LOCK ADAMS RITE		SECURED W/ (2) #10 FH SMS
34	E1-1618	1/ MOV. PANEL	STRIKE	–	SECURED W/ (2) #10 X 1-1/4" PH TS
35	E3-1161	1/ MOV. PANEL	PANEL GUIDE	POLYAMIDE 6	SECURED W/ #8 X 1/2" PH TS
36	H1302	1	PULL HANDLE	–	–
37	E2-0709	1/ MOV. PANEL	SILL BUMPER	EPDM	SECURED W/ #10 X 1-1/4" PH TS
38	E1-1623	AS REQD.	REINFORCING ANGLE	6063-T5	AT OXXO DOORS ONLY
39	E1-1622	AS REQD.	REINFORCING CLIP AT SILL LOCATION	6063-T5	AT OXXO DOORS ONLY
40	E9-6124	AS REQD.	JAMB-SILL ADAPTER (FIXED)	6063-T5	–
41	E9-6121	AS REQD.	ADAPTER (OPERABLE)	6063-T5	–
42	E9-6125	AS REQD.	MULLION ADAPTER (FIXED)	6063-T5	–
43	E1-0196	AS REQD.	REINFORCING CHANNEL	STEEL	2 X 3-1/8 X 2 X 3/16" THK.
44	E1-0195	AS REQD.	REINFORCING CHANNEL	STEEL	1-1/4 X 3-3/4 X 1-1/4 X 3/16" THK.

Engr: OR. HUMAYOUN FAROOQ
STRUCTURES
FLA. PE # 16557
C.A.N. 3538

DEC 0 8 2004

Approved as complying with the Florida Building Code
Date 01/13/05
NOA# 04-1013.07
Miami-Dade Product Control Division
By:

AL-FAROOQ CORPORATION
ENGINEERS, PLANNERS & PRODUCT DESIGN
1235 SW 87 AVE
MIAMI, FLORIDA 33174
TEL. (305) 264-8100 FAX. (305) 262-6978
COMP-ANL\W04-54YKK

YSD700S ALUMINUM SLIDING GLASS DOOR (N.I.)

YKK AP AMERICA INC.
332 FIRETOWER ROAD
DUBLIN, GEORGIA 31021
TEL.(478) 277-1955 FAX(478) 277-1978

revisions:			
no	date	by	description
A	12.07.04		NO CHANGE THIS SHEET

date: 06-14-04
scale: 3/8" = 1"
dr. by: HAMID
chk. by:

drawing no.
W04-54

sheet 9 of 11

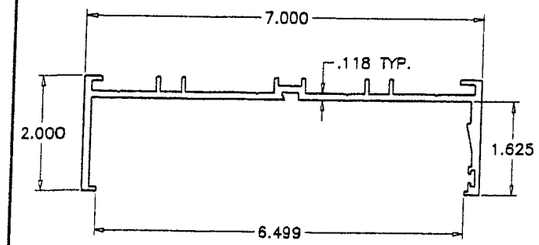

1 FRAME HEAD

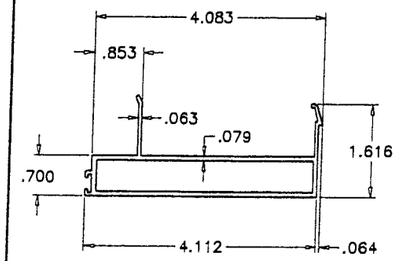

2 HEAD ADAPTER (OPERABLE)

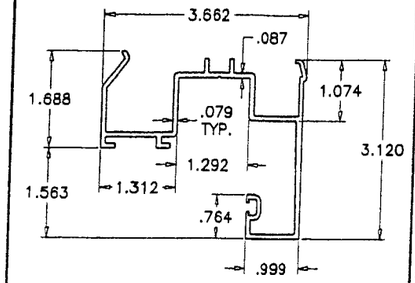

3 HEAD ADAPTER (FIXED)

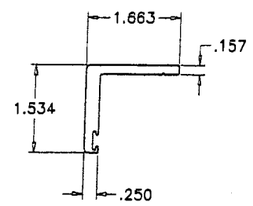

4 HEAD ADAPTER (EXTERIOR)

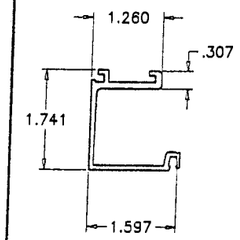

5 GLASS STOP HEAD

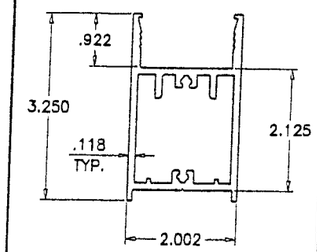

12 TOP & BOTTOM RAIL

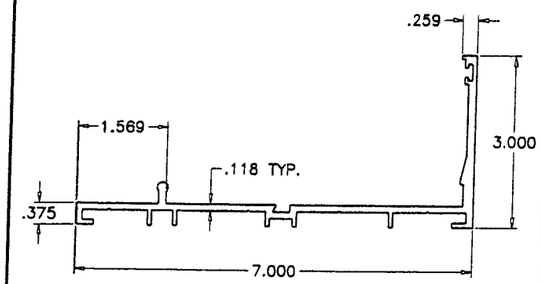

6 FRAME SILL

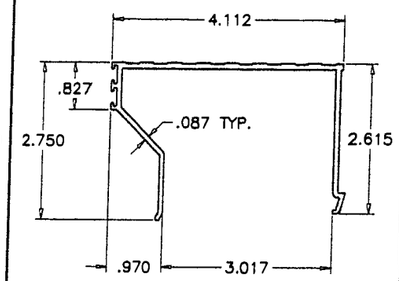

7 SILL ADAPTER (OPERABLE)

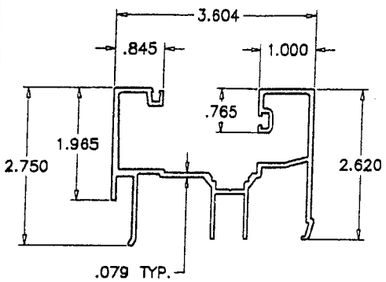

8 SILL ADAPTER (FIXED)

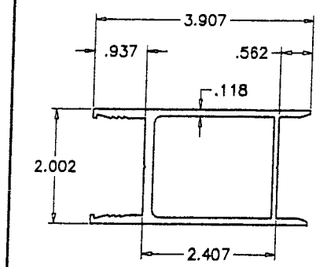

13 JAMB STILE

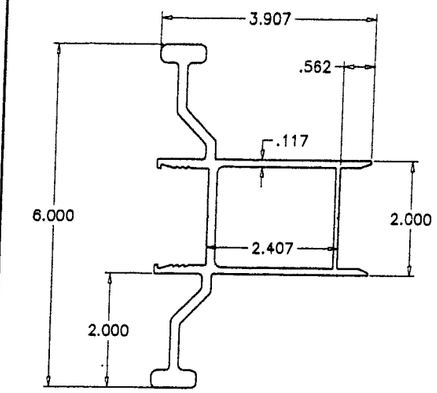

28 FEMALE LOCK STILE

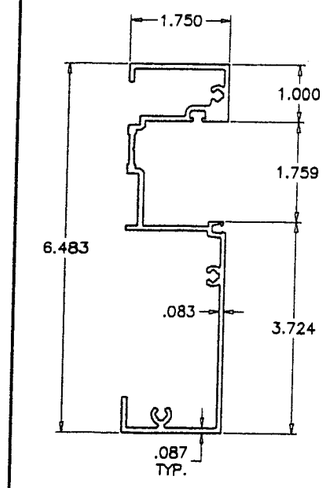

10 FRAME JAMB (FIXED)

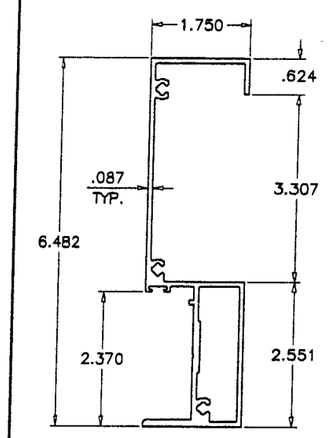

9 FRAME JAMB (OPERABLE)

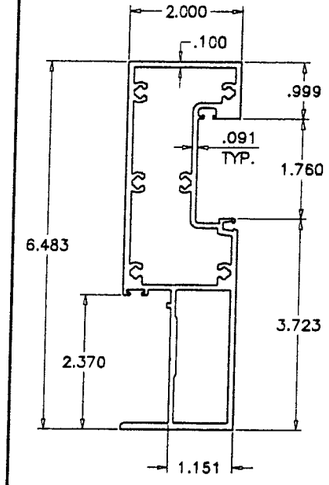

11 ASTRAGAL STILE

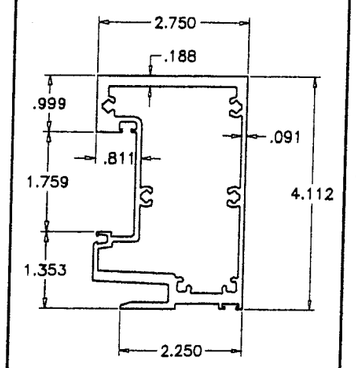

15 INTERLOCK (FIXED)

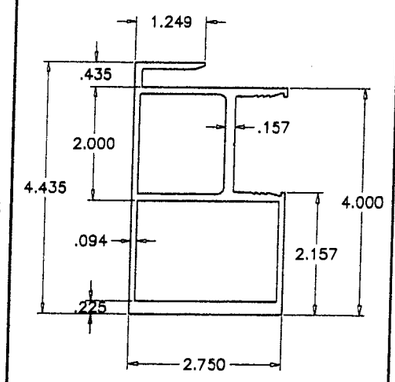

14 INTERLOCK (OPERABLE)

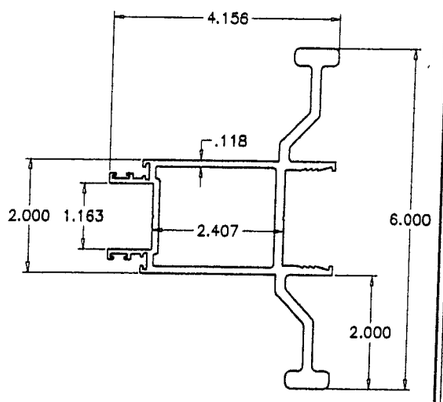

28A MALE LOCK STILE

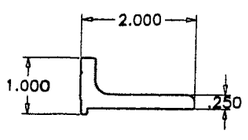

38 REINFORCING ANGLE

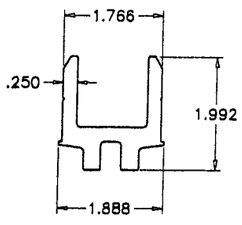

39 REINFORCING CLIP

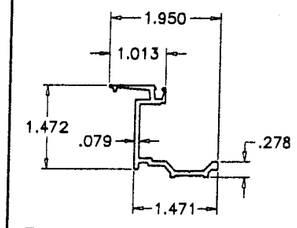

40 JAMB-SILL ADAPTER (FIXED)

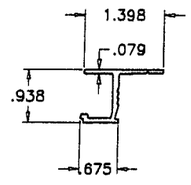

41 ADAPTER (OPERABLE)

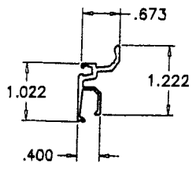

42 MULLION ADAPTER (FIXED)

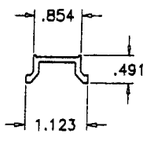

16 SETTING BLOCK CHAIR

Engr: DR. HUMAYOUN FAROOQ
STRUCTURES
FLA. PE # 16557
C.A.N. 3538

DEC 0 8 2004

Approved as complying with the Florida Building Code
Date 01/13/05
NOA# 04-1013.07
Miami-Dade Product Control Division
By

AL-FAROOQ CORPORATION
ENGINEERS, PLANNERS & PRODUCT DESIGN
1235 SW 87 AVE
MIAMI, FLORIDA 33174
TEL. (305) 264-8100 FAX. (305) 262-6978
COMP-ANL\W04-54YKK

YSD700S ALUMINUM SLIDING GLASS DOOR (N.I.)

YKK AP AMERICA INC.
332 FIRETOWER ROAD
DUBLIN, GEORGIA 31021
TEL(478) 277-1955 FAX(478) 277-1978

revisions:

no	date	by	description
A	12.07.04		NO CHANGE THIS SHEET

date: 06-14-04
scale: 3/8" = 1"
dr. by: HAMID
chk. by:

drawing no. W04-54

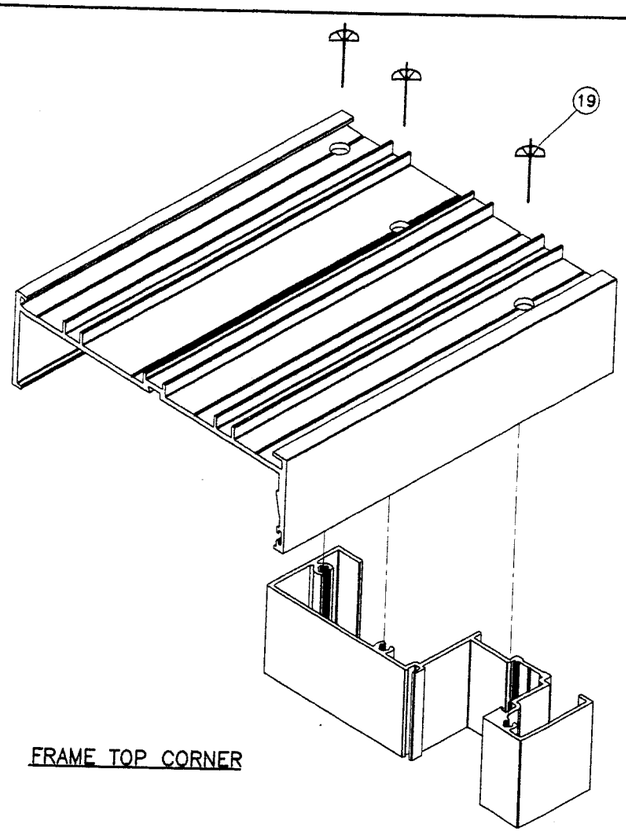

FRAME TOP CORNER

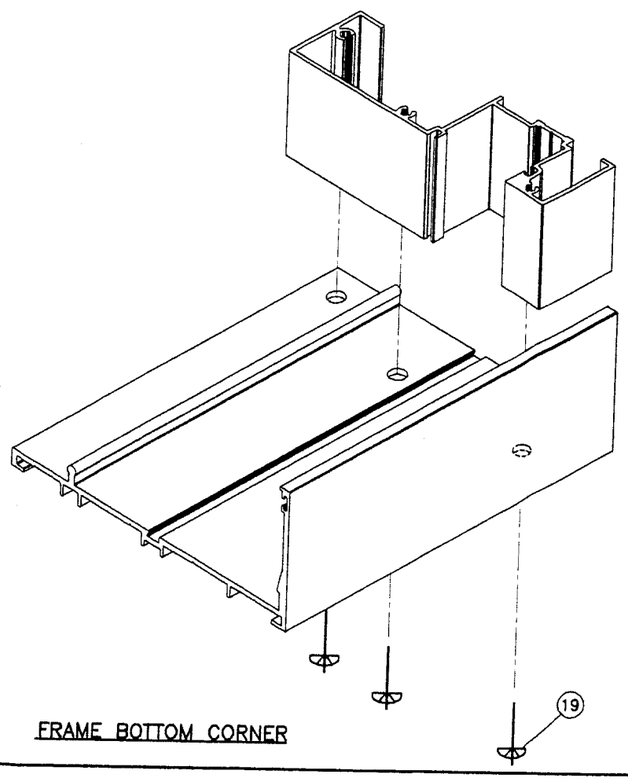

FRAME BOTTOM CORNER

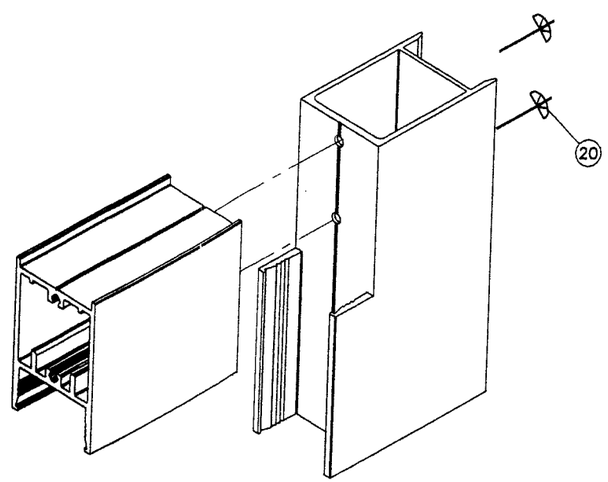

PANEL TOP/BOTTOM CORNER

Engr: DR. HUMAYOUN FAROOQ
STRUCTURES
FLA. PE # 15557
C.A.N. 3538

DEC 0 8 2004

Approved as complying with the Florida Building Code
Date 01/13/05
NOA# 04-1013.07
Miami-Dade Product Control Division
By M Khatri

YSD700S ALUMINUM SLIDING GLASS DOOR (N.I.)

YKK ap™

YKK AP AMERICA INC.
332 FIRETOWER ROAD
DUBLIN, GEORGIA 31021
TEL(478) 277-1955 FAX(478) 277-1978

AL-FAROOQ CORPORATION
ENGINEERS, PLANNERS & PRODUCT DESIGN
1235 SW 87 AVE
MIAMI, FLORIDA 33174
TEL. (305) 264-8100 FAX. (305) 262-6978

COMP-ANL\W04-54YKK

revisions:

no	date	by	description
A	12.07.04		NO CHANGE THIS SHEET

date: 06-14-04
scale: 3/8" = 1"
dr. by: HAMID
chk. by:

drawing no.
W04-54

sheet 11 of 11