MIAMI-DADE COUNTY

BUILDING CODE COMPLIANCE OFFICE (BCCO)
PRODUCT CONTROL DIVISION

MIAMI-DADE COUNTY, FLORIDA
METRO-DADE FLAGLER BUILDING
140 WEST FLAGLER STREET, SUITE 1603
MIAMI, FLORIDA 33130-1563
(305) 375-2901 FAX (305) 375-2908

NOTICE OF ACCEPTANCE (NOA)

Silver Line Building Products Corporation
One Silver Line Drive.
North Brunswick, NJ 08902

SCOPE:

This NOA is being issued under the applicable rules and regulations governing the use of construction materials. The documentation submitted has been reviewed by Miami-Dade County Product Control Division and accepted by the Board of Rules and Appeals (BORA) to be used in Miami Dade County and other areas where allowed by the Authority Having Jurisdiction (AHJ).

This NOA shall not be valid after the expiration date stated below. The Miami-Dade County Product Control Division (In Miami Dade County) and/or the AHJ (in areas other than Miami Dade County) reserve the right to have this product or material tested for quality assurance purposes. If this product or material fails to perform in the accepted manner, the manufacturer will incur the expense of such testing and the AHJ may immediately revoke, modify, or suspend the use of such product or material within their jurisdiction. BORA reserves the right to revoke this acceptance, if it is determined by Miami-Dade County Product Control Division that this product or material fails to meet the requirements of the applicable building code.

This product is approved as described herein, and has been designed to comply with the Florida Building Code, including the High Velocity Hurricane Zone.

DESCRIPTION: Series 2100 Extruded White PVC Single Hung Window

APPROVAL DOCUMENT: Drawing No. **S-2375**, titled "Extruded PVC Single Hung Window up to 55 1/2 " x 65-1/2", sheets 1 to 6 of 6, prepared by R. W. Building Consultants, Inc., dated 06/15/03, with revision #4 dated 12/10/04, signed and sealed by Lyndon F. Schmidt, P.E., bearing the Miami-Dade County Product Control Revision stamp with the Notice of Acceptance number and expiration date by the Miami-Dade County Product Control Division.

MISSILE IMPACT RATING: None

LABELING: Each unit shall bear a permanent label with the manufacturer's name or logo, city, state and following statement: "Miami-Dade County Product Control Approved", unless otherwise noted herein.

RENEWAL of this NOA shall be considered after a renewal application has been filed and there has been no change in the applicable building code negatively affecting the performance of this product.

TERMINATION of this NOA will occur after the expiration date or if there has been a revision or change in the materials, use, and/or manufacture of the product or process. Misuse of this NOA as an endorsement of any product, for sales, advertising or any other purposes shall automatically terminate this NOA. Failure to comply with any section of this NOA shall be cause for termination and removal of NOA.

ADVERTISEMENT: The NOA number preceded by the words Miami-Dade County, Florida, and followed by the expiration date may be displayed in advertising literature. If any portion of the NOA is displayed, then it shall be done in its entirety.

INSPECTION: A copy of this entire NOA shall be provided to the user by the manufacturer or its distributors and shall be available for inspection at the job site at the request of the Building Official.

This NOA **revises NOA # 03-1210.05** and consists of this page 1 and evidence pages E-1 and E-2, as well as approval document mentioned above.

The submitted documentation was reviewed by **Manuel Perez, P.E.**

PRODUCT CONTROL ACCEPTED

NOA No 04-1025.04
Expiration Date: September 18, 2008
Approval Date: February 24, 2005

Silver Line Building Products Corporation

NOTICE OF ACCEPTANCE: EVIDENCE SUBMITTED

A. DRAWINGS

1. Manufacturer's die drawings and sections.
2. Drawing No. **S-2375**, titled "Extruded PVC Single Hung Window up to 55-1/2" x 65-1/2", sheets 1 to 6 of 6, prepared by R. W. Building Consultants, Inc., dated 06/15/03, with revision #4 dated 12/10/04, signed and sealed by Lyndon F. Schmidt, P.E.

B. TESTS

1. Test reports on 1) Uniform Static Air Pressure Test, Loading per FBC TAS 202-94 along with marked-up drawings and installation diagram of PVC Frame Single Hung Windows, prepared by Architectural Testing Inc., Test Report No. **ATI-01-44453.03** dated 11/07/03, signed and sealed by Joseph A. Reed, P.E.
   "Submitted under NOA # 03-1210.05"
2. Test reports on 1) Air Infiltration Test, per FBC, TAS 202-94
   2) Uniform Static Air Pressure Test, Loading per FBC TAS 202-94
   3) Water Resistance Test, per FBC, TAS 202-94
   4) Forced Entry Test, per FBC 3603.2 (b) and TAS 202-94
   along with marked-up drawings and installation diagram of PVC Frame Single Hung Windows, prepared by Architectural Testing Inc., Test Report No. **ATI-01-44453.01** dated 06/09/03, signed and sealed by Joseph A. Reeves, P.E.
   "Submitted under NOA # 03-0630.03"

C. CALCULATIONS

1. Anchor Calculations, ASTM-E1300-98 and structural analysis, dated 12/11/03 prepared, signed and sealed by Lyndon F. Schmidt, P.E. ***"Submitted under NOA # 03-1210.05"***
2. Anchor Calculations and structural analysis, dated 06/13/03 prepared, signed and sealed by Lyndon F. Schmidt, P.E. ***"Submitted under NOA # 03-0630.03"***

D. QUALITY ASSURANCE

1. Miami Dade Building Code Compliance Office (BCCO)

E. MATERIAL CERTIFICATIONS

1. Notice of Acceptance No. **02-0523.01** issued to Silverline Building Products Corporation for "White Rigid PVC Exterior Extrusions for Windows and Doors" dated 08/15/02, expiring on 08/15/07. ***"Submitted under NOA # 03-0630.03"***

Manuel Perez, P.E.
Product Control Examiner
NOA No. 04-1025.04
Expiration Date: September 18, 2008
Approval Date: February 24, 2005

Silver Line Building Products Corporation

NOTICE OF ACCEPTANCE: EVIDENCE SUBMITTED

F. STATEMENTS

1. Statement letter of no financial interest, dated November 6, 2003, signed by Peter R. Thornton, P.E. ***"Submitted under NOA # 03-1210.05"***
2. Statement letter of conformance and no financial interest, dated December 9, 2003, signed and sealed by Lyndon F. Schmidt, P.E.
   "Submitted under NOA # 03-1210.05"
3. Statement letter of conformance and no financial interest, dated December 9, 2003, signed by Peter R. Thornton, Director of Engineering for Silver Line Building Products.
   "Submitted under NOA # 03-1210.05"
4. Letter stating that Rick Wright of R. W. Building Consultants has been contracted to represent Silver Line Building Products, dated November 6, 2003, signed by Peter R. Thornton, Director of Engineering for Silver Line Building Products.
   "Submitted under NOA # 03-1210.05"

G. OTHER

1. Notice of Acceptance No. **03-1210.05**, issued to Silver Line Building Products Corporation for their Series 2100 Extruded PVC Single Hung Window, approved on 01/29/04 and expiring on 09/18/08.
2. Letter from consultant stating that the product is in compliance with the Florida Building Code (FBC).

Manuel Perez, P.E.
Product Control Examiner
NOA No 04-1025.04
Expiration Date: September 18, 2008
Approval Date: February 24, 2005

SilverLINE
BUILDING PRODUCTS CORP.
1 SILVERLINE DRIVE NORTH BRUNSWICK, NJ 08902 PH. 732.435.1000

MODEL SERIES 2100 SINGLE & TWIN EXTRUDED PVC SINGLE HUNG WINDOWS

GENERAL NOTES:

1. THIS PRODUCT IS DESIGNED TO COMPLY WITH THE "HVHZ" OF THE FLORIDA BUILDING CODE.
2. WOOD BUCKS BY OTHERS, MUST BE ANCHORED PROPERLY TO TRANSFER LOADS TO THE STRUCTURE AND BE REVIEWED BY THE BUILDING OFFICIAL.
3. PRODUCT ANCHORS SHALL BE AS LISTED AND SPACED AS SHOWN ON DETAILS. ANCHOR EMBEDMENT TO BASE MATERIAL SHALL BE BEYOND WALL DRESSING OR STUCCO.
4. DESIGNED PRESSURE RATING SEE DESIGN PRESSURE RATING TABLE THIS SHEET.
5. INSTALLATION OF THIS SYSTEM IN "HVHZ" AREA REQUIRES THE USE OF APPROVED SHUTTER / EXTERNAL PROTECTION DEVICE, COMPLYING WITH "HVHZ" REQUIREMENTS; INSTALLATION OF THIS SYSTEM OUTSIDE OF "HVHZ" AREA, SHALL MEET THE APPLICABLE CODE REQUIREMENTS FOR WINDBORNE DEBRIS PROTECTION.
6. THIS PRODUCT MEETS THE WATER REQUIREMENTS FOR HIGH VELOCITY HURRICANE ZONES.

TABLE OF CONTENTS

SHEET	DESCRIPTION
1	GENERAL NOTES & TYPICAL ELEVATIONS
2	VERTICAL CROSS SECTIONS & GLAZING DETAIL
3	HORIZONTAL CROSS SECTIONS & MULLION DETAIL
4	ANCHORING LOCATIONS
5	UNIT COMPONENTS
6	UNIT COMPONENTS & BILL OF MATERIALS

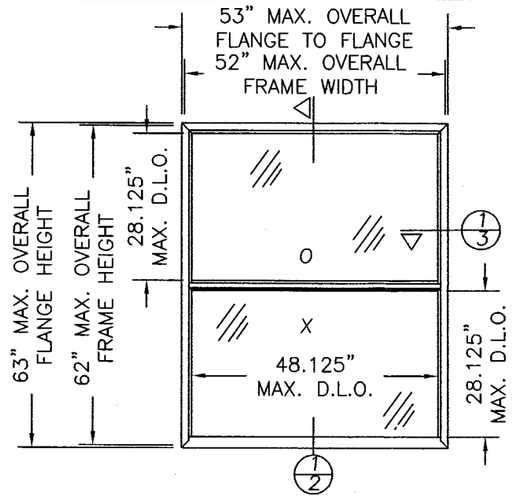

53" x 63" SINGLE WINDOW:
SASH SIZE: 50.125" x 30.625"
DAYLITE OPENING SIZE: 48.125" x 28.125"

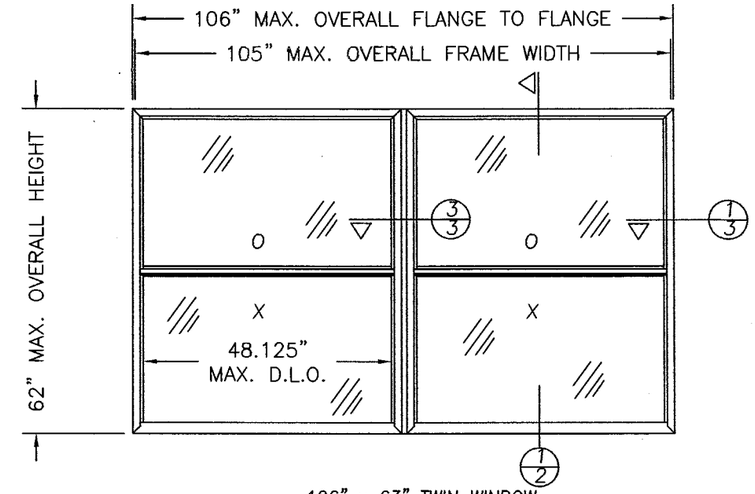

106" x 63" TWIN WINDOW:
SASH SIZE: 50.125" x 30.625"
DAYLITE OPENING SIZE: 48.125" x 28.125"

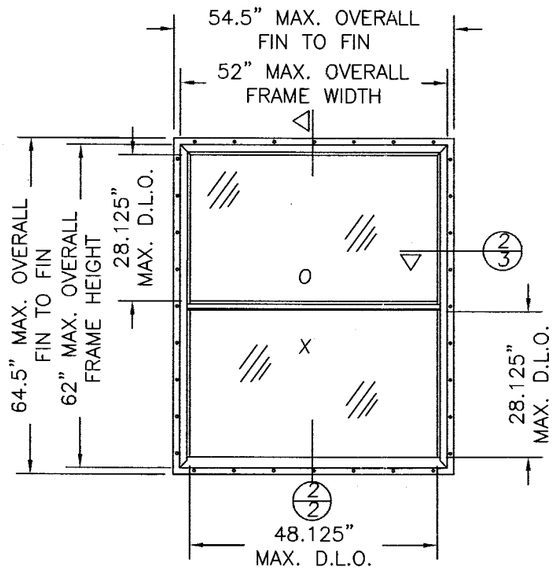

54.5" x 64.5" SINGLE WINDOW W/NAILING FIN
SASH SIZE: 50.125" x 30.625"
DAYLITE OPENING SIZE: 48.125" x 28.125"

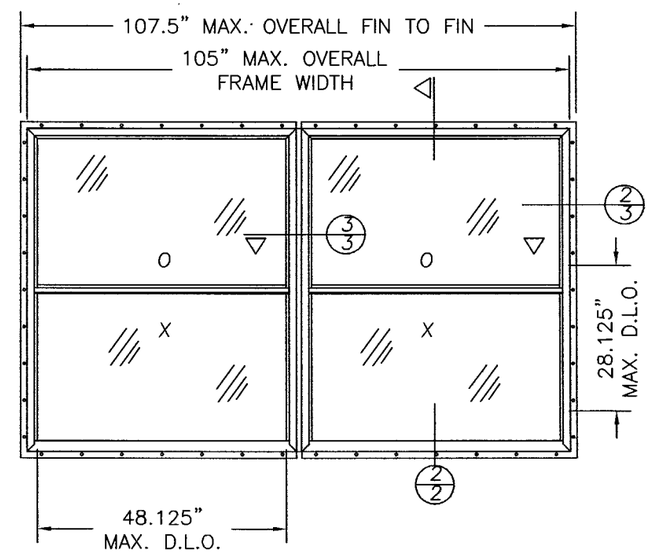

107.5" x 64.5" TWIN WINDOW W/NAILING FIN:
SASH SIZE: 50.125" x 30.625"
DAYLITE OPENING SIZE: 48.125" x 28.125"

DESIGN PRESSURE RATING

WINDOW UNIT TYPE & SIZE			GLASS TYPE 5/8" INSULATED GLASS	SINGLE UNIT		TWIN MULLED UNIT	
NAILING FIN O.A.	FLANGE O.A.	FRAME O.A.		POSITIVE	NEGATIVE	POSITIVE	NEGATIVE
54 1/2" X 64 1/2"	53" X 63"	52" X 62"	1/8" ANNEALED – 3/8" AIR – 1/8" ANNEALED	+ 35.0 psf	– 35.0 psf	+ 30.0 psf	– 35.0 psf
47 1/2" X 64 1/2"	46" X 63"	45" X 62"	1/8" ANNEALED – 3/8" AIR – 1/8" ANNEALED	+ 40.0 psf	– 40.0 psf	+ 34.0 psf	– 40.0 psf
42 1/2" X 64 1/2"	41" X 63"	40" X 62"	1/8" ANNEALED – 3/8" AIR – 1/8" ANNEALED	+ 45.0 psf	– 45.0 psf	+ 39.0 psf	– 45.0 psf
38 1/2" X 64 1/2"	37" X 63"	36" X 62"	1/8" ANNEALED – 3/8" AIR – 1/8" ANNEALED	+ 50.0 psf	– 50.0 psf	+ 43.0 psf	– 50.0 psf

PRODUCT REVISED
as complying with the Florida Building Code
Acceptance No. 04-1025.04
Expiration Date SEPT. 18, 2008
By Manuel Perez
Miami Dade Product Control Division

Product Approval Documents Prepared By:
RW BUILDING CONSULTANTS, INC.
P.O. Box 230 Valrico FL. 33595
Phone No.: 813.659.9197
Florida Board of Professional Engineers
Certificate of Authorization No. 9813
1-26-05
Lyndon F. Schmidt, P.E. No. 43409

PRODUCT: EXTRUDED PVC SINGLE HUNG WINDOW UP TO 55 1/2" x 65 1/2"
PART OR ASSEMBLY: GENERAL NOTES & TYPICAL ELEVATIONS

REVISIONS

NO.	DATE		BY
4	12/10/04	CHANGE ENGINEER	EW
3	10/18/04	REVISE O.A. SIZE NOTES	EW
2	12/01/03	ADD MULLED UNIT	RW
1	8/06/03	REVISE ANCHORING	RW

DATE: 6/15/03
SCALE: N.T.S.
DWG. BY: TJH
CHK. BY: RW
DRAWING NO.: S-2375
SHEET 1 OF 6

R:\ACTIVE PROJECTS\PF633\S2375 REV 4\S-2375-1-R4.DWG

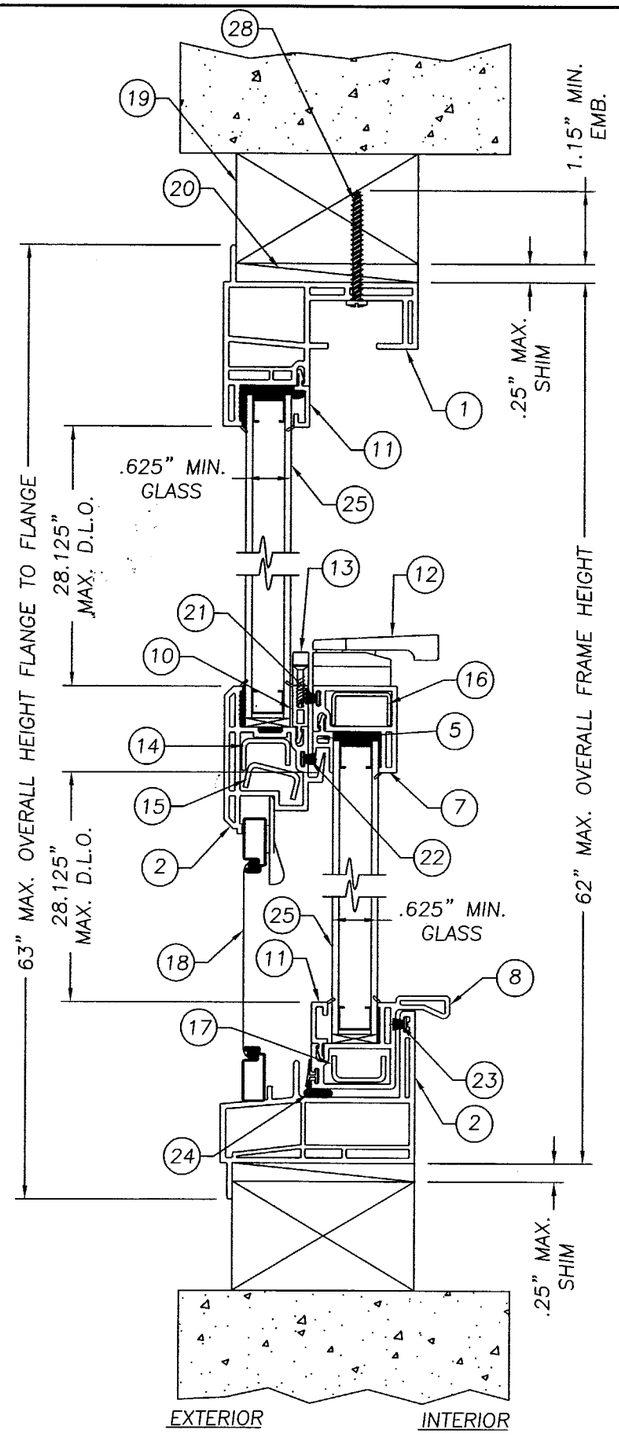

1/2 VERTICAL CROSS SECTION
FLANGE UNIT

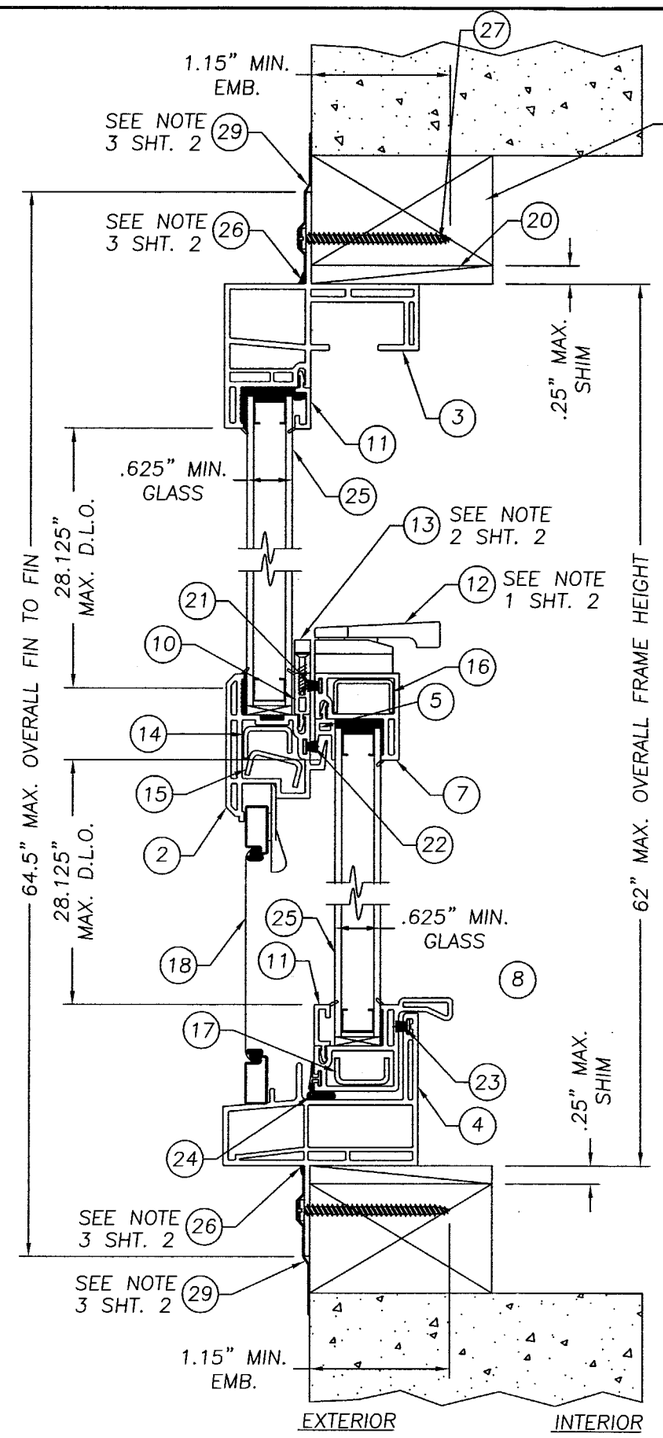

2/2 VERTICAL CROSS SECTION
NAIL FIN UNIT

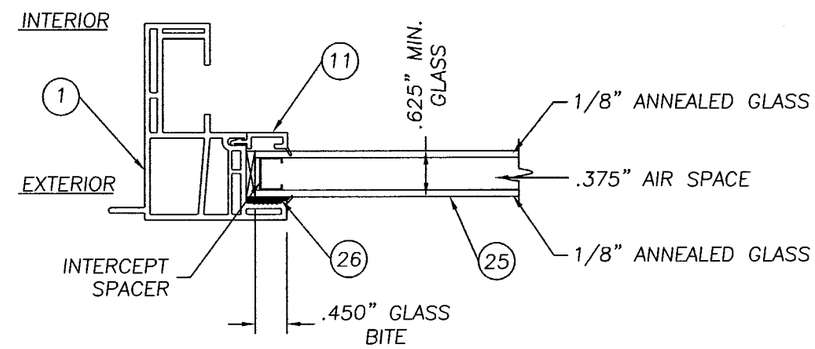

5/8" INSULATED ANNEALED GLASS
GLAZING DETAIL

NOTE:

1. LOCATE OPERATING SASH LOCKS 7.5" FROM EACH END OF THE ACTIVE MEETING RAIL, FASTEN WITH (2) #8 x 3/4" SELF TAPPING SCREWS.
2. LOCATE SASH KEEPER 6.5" FROM EACH END OF THE MEETING RAIL, FASTEN WITH (2) #6 x 3/4" SCREWS.
3. 15 lbs. FELT MUST BE USED AS A WATER BARRIER. THE FELT MUST COVER THE NAILING FIN AND ANCHOR SCREW HEADS. ALL LOOSE EDGES OF THE FELT MUST BE SEALED WITH SILICONE.

PRODUCT REVISED
as complying with the Florida Building Code
Acceptance No. 04-1025.04
Expiration Date SEPT. 18, 2008
By Manuel Perez
Miami Dade Product Control Division

Product Approval Documents Prepared By:
RW BUILDING CONSULTANTS, INC.
P.O. Box 230 Valrico FL. 33595
Phone No.: 813.659.9197
Florida Board of Professional Engineers
Certificate Of Authorization No. 9813
1-26-05
Lyndon F. Schmidt, P.E. No. 43409

PRODUCT: EXTRUDED PVC SINGLE HUNG WINDOW UP TO 55 1/2" x 65 1/2"

PART OR ASSEMBLY: VERTICAL CROSS SECTIONS & GLAZING DETAIL

REVISIONS

NO.	DATE		BY
4	12/10/04	CHANGE ENGINEER	EW
3	10/18/04	REVISE O.A. SIZE NOTES	EW
2	12/01/03	ADD MULLED UNITS	RW
1	8/06/03	REVISE ANCHORING	RW

DATE: 6/15/03
SCALE: N.T.S.
DWG. BY: TJH
CHK. BY: RW
DRAWING NO.: S-2375
SHEET 2 OF 6

R:\ACTIVE PROJECTS\PF633\S2375 REV 4\S-2375-2-R4.DWG

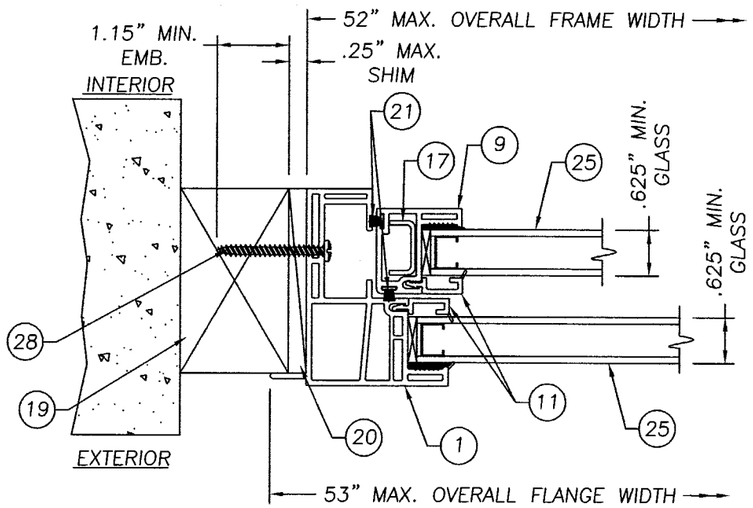

1/3 HORIZONTAL CROSS SECTION
FLANGE UNIT

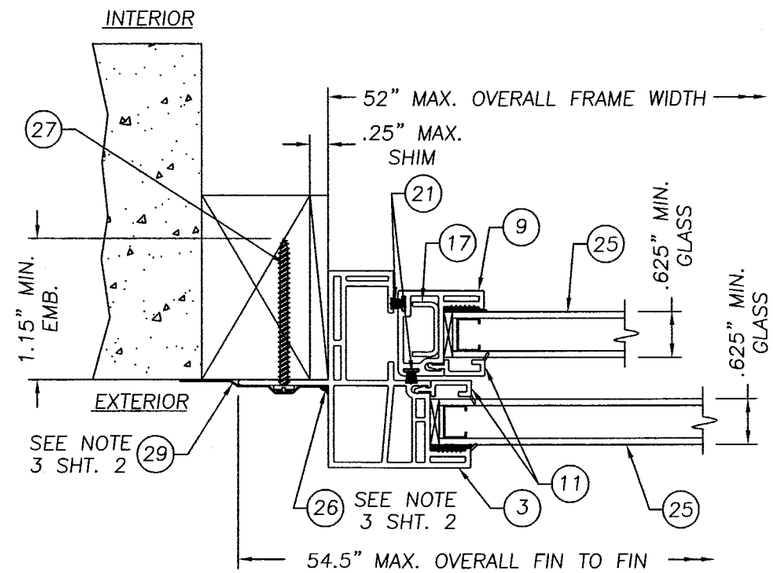

2/3 HORIZONTAL CROSS SECTION
NAIL FIN UNIT

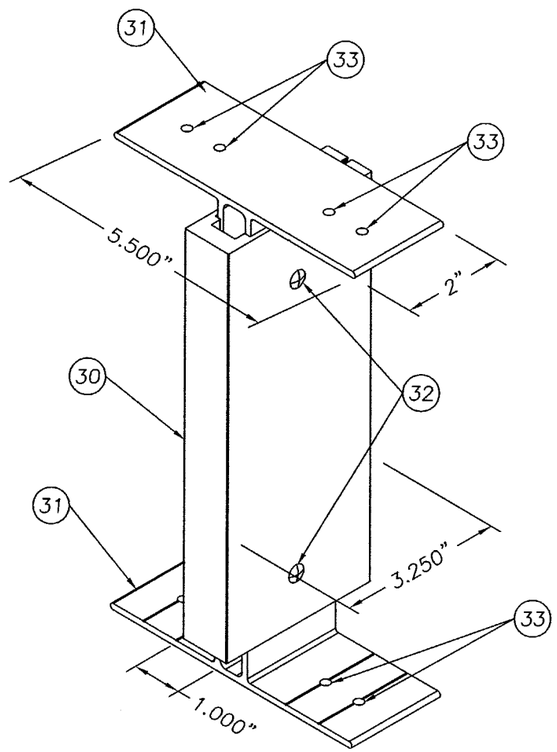

MOUNTING BRACKET TO MULLION
ASSEMBLED DETAIL

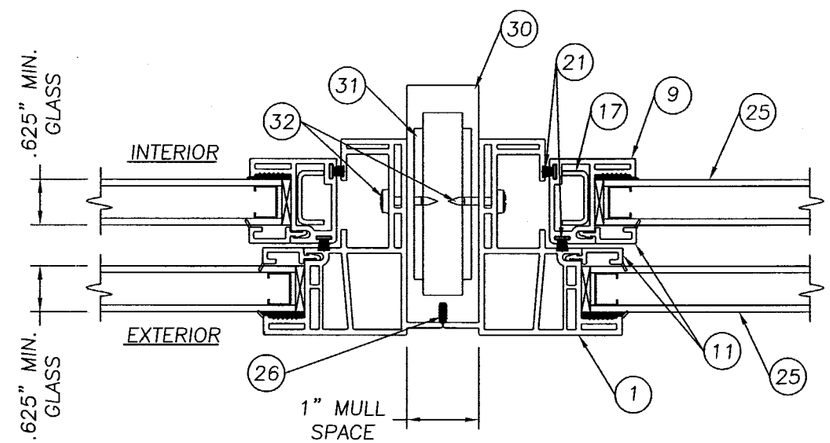

3/3 HORIZONTAL CROSS SECTION
@ MULLION

Product Approval Documents Prepared By:
RW BUILDING CONSULTANTS, INC.
P.O. Box 230 Valrico FL. 33595
Phone No.: 813.659.9197
Florida Board of Professional Engineers
Certificate Of Authorization No. 9813
Lyndon F. Schmidt, P.E. No. 43409
12.6.05

PRODUCT: EXTRUDED PVC SINGLE HUNG WINDOW UP TO 55 1/2" x 65 1/2"
PART OR ASSEMBLY: HORIZONTAL CROSS SECTIONS & MULLION DETAIL

NO.	DATE	REVISIONS	BY
4	12/10/04	CHANGE ENGINEER	EW
3	10/18/04	REVISED O.A. SIZE NOTES	EW
2	12/01/03	ADD MULLED UNITS	RW
1	8/06/03	REVISE ANCHORING	RW

PRODUCT REVISED
as complying with the Florida
Building Code
Acceptance No. 04-1025.04
Expiration Date SEPT. 18, 2008
By Manuel Perez
Miami Dade Product Control
Division

DATE: 6/15/03
SCALE: N.T.S.
DWG. BY: TJH
CHK. BY: RW
DRAWING NO.: S-2375
SHEET 3 OF 6

R:\ACTIVE PROJECTS\PF633\S2375 REV 4\S-2375-3-R4.DWG

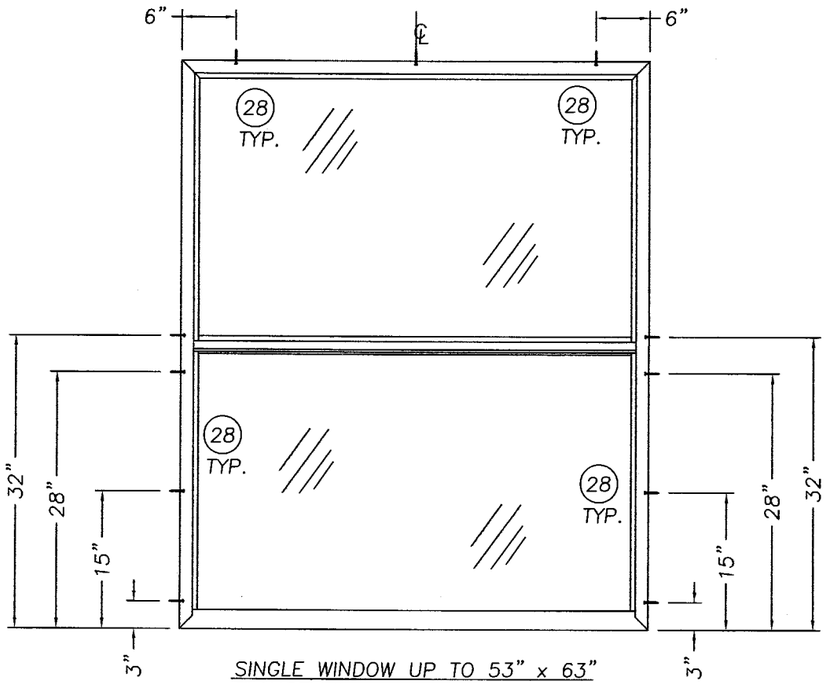

SINGLE WINDOW UP TO 53" x 63"
FLANGE UNIT

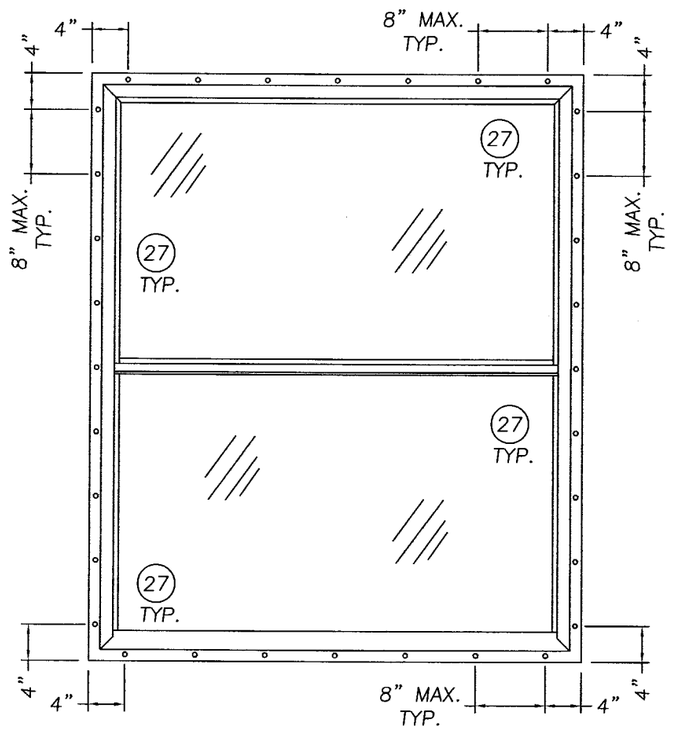

SINGLE WINDOW UP TO 55.5" x 65.5"
NAIL FIN UNIT

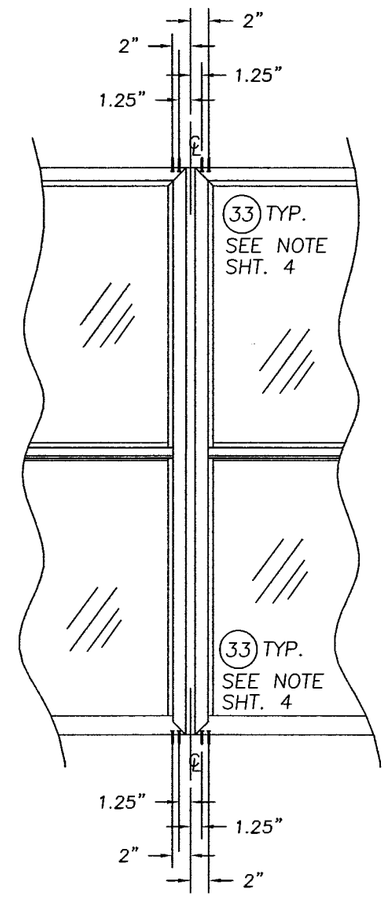

ANCHORING AT THE MULLION

NOTE:
THE ANCHOR SCREWS AT 1.25" AND 2" FROM THE FRAME CENTER LINE AT THE MULLION ARE ITEM #33, A # 10 x 1 1/2" PHILLIPS FLAT HEAD SHEET METAL SCREW AND ARE GOING THROUGH ITEM #31, THE BEAM MULLION MOUNTING BRACKET, AND GOING INTO THE SUB BUCK.

PRODUCT REVISED
as complying with the Florida Building Code
Acceptance No. 04-1023.04
Expiration Date SEPT. 18, 2008
By Manuel Perez
Miami-Dade Product Control Division

Product Approval Documents Prepared By:
RW BUILDING CONSULTANTS, INC.
P.O. Box 230 Valrico FL. 33595
Phone No.: 813.659.9197
Florida Board of Professional Engineers
Certificate Of Authorization No. 9813
Lyndon F. Schmidt, P.E. No. 43409
1.26.05

PRODUCT: EXTRUDED PVC SINGLE HUNG WINDOW UP TO 55 1/2" x 65 1/2"
PART OR ASSEMBLY: ANCHORING LOCATIONS

REVISIONS

NO.	DATE		BY
4	12/10/04	CHANGE ENGINEER	EW
3	10/18/04	REVISE O.A. SIZE NOTES	EW
2	12/01/03	ADD MULLED UNITS	RW
1	8/06/03	REVISE ANCHORING	RW

DATE: 6/15/03
SCALE: N.T.S.
DWG. BY: TJH
CHK. BY: RW
DRAWING NO.: S-2375
SHEET 4 OF 6

R:\ACTIVE PROJECTS\PF633\S2375 REV 4\S-2375-4-R4.DWG

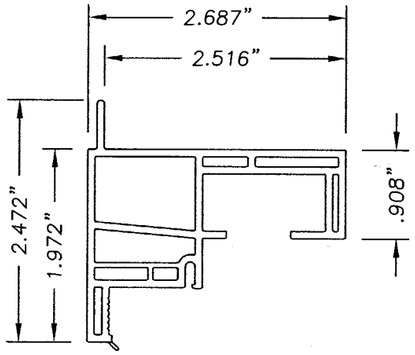

(1) EXTRUDED PVC MAIN FRAME
(FLANGE TYPE)
0.075" WALL THICKNESS

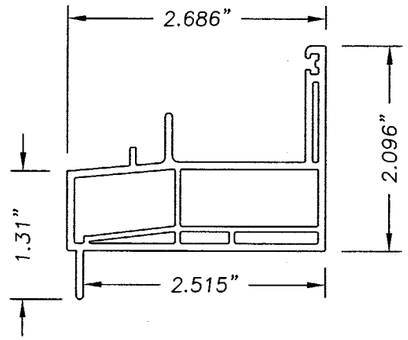

(2) EXTRUDED PVC SILL
(FLANGE TYPE)
0.075" WALL THICKNESS

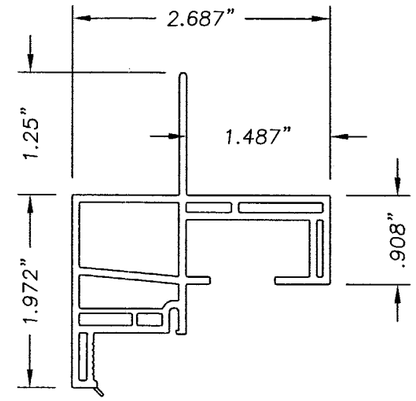

(3) EXTRUDED PVC MAIN FRAME
(FIN TYPE)
0.075" WALL THICKNESS

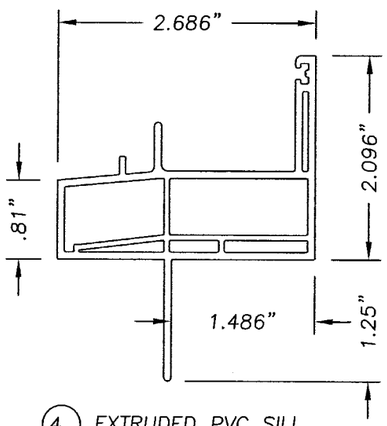

(4) EXTRUDED PVC SILL
(FIN TYPE)
0.070" WALL THICKNESS

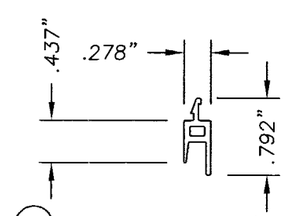

(5) EXTRUDED PVC GLAZING BEAD
(INTERLOCK)
0.062" WALL THICKNESS

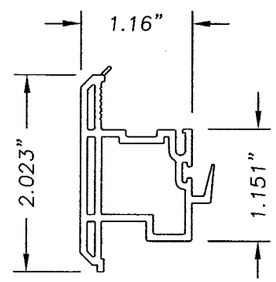

(6) EXTRUDED PVC MEETING RAIL
0.070" WALL THICKNESS

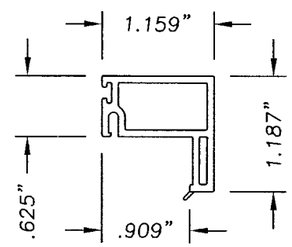

(7) EXTRUDED PVC TOP RAIL
0.070" WALL THICKNESS

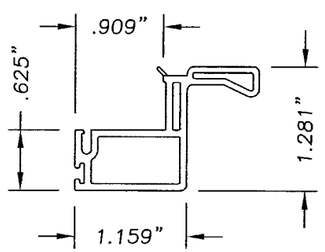

(8) EXTRUDED PVC BOTTOM LIFT RAIL
0.070" WALL THICKNESS

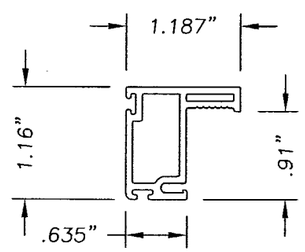

(9) EXTRUDED PVC STILE
0.070" WALL THICKNESS

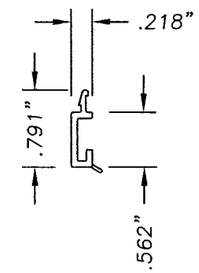

(11) EXTRUDED PVC GLAZING BEAD
(HORIZONTAL / VERTICAL)
0.062" WALL THICKNESS

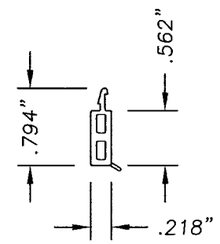

(10) EXTRUDED PVC GLAZING BEAD
(KEEPER)
0.062" WALL THICKNESS

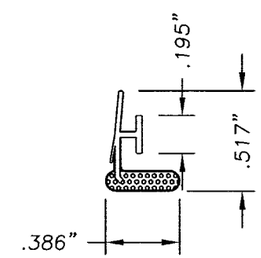

(24) WEATHERSTRIP VINYL BULB
FIXED MEETING RAIL
BY AMESBURY

PRODUCT REVISED
as complying with the Florida
Buiding Code
Acceptance No. 04-1025.04
Expiration Date SEPT. 18, 2008
By Manuel Sera
Miami Dade Product Control
Division

Product Approval Documents Prepared By:
RW BUILDING CONSULTANTS, INC.
P.O. Box 230 Valrico FL. 33595
Phone No.: 813.659.9197
Florida Board of Professional Engineers
Certificate Of Authorization No. 9813
Lyndon F. Schmidt, P.E. No. 43409
6-26-05

PRODUCT: EXTRUDED PVC SINGLE HUNG WINDOW UP TO 55 1/2" x 65 1/2"

PART OR ASSEMBLY: ANCHORING LOCATIONS

REVISIONS

NO.	DATE		BY
4	12/10/04	CHANGE ENGINEER	EW
3	10/18/04	REVISE O.A. SIZE NOTES	EW
2	12/01/03	ADD MULLED UNITS	RW
1	8/06/03	REVISE ANCHORING	RW

DATE: 6/15/03
SCALE: N.T.S.
DWG. BY: TJH
CHK. BY: RW
DRAWING NO.: S-2375
SHEET 5 OF 6

R:\ACTIVE PROJECTS\PF6331\S2375 REV 4\S-2375-5-R4.DWG

Item	DESCRIPTION	Material
1	EXTRUDED PVC MAIN FRAME (FLANGE TYPE) #2111	PVC
2	EXTRUDED PVC SILL (FLANGE TYPE) #2113	PVC
3	EXTRUDED PVC MAIN FRAME (NAIL FIN TYPE) #2161	PVC
4	EXTRUDED PVC SILL (NAIL FIN TYPE) #2163	PVC
5	EXTRUDED PVC GLAZING BEAD (INTERLOCK) #3557	PVC
6	EXTRUDED PVC MEETING RAIL #2167	PVC
7	EXTRUDED PVC TOP RAIL #2908	PVC
8	EXTRUDED PVC BOTTOM LIFT RAIL #2806	PVC
9	EXTRUDED PVC STILE #2905	PVC
10	EXTRUDED PVC GLAZING BEAD (KEEPER) #2317	PVC
11	EXTRUDED PVC GLAZING BEAD (VERT. & HORT.) #2217	PVC
12	OPERABLE SASH LOCK	
13	SASH KEEPER #2240	STEEL
14	FIXED MEETING RAIL REINF. (TOP) 0.060" GALV. STL.	STEEL
15	FIXED MEETING RAIL REINF. (BOTTOM) 0.060" GALV. STL.	STEEL
16	LOCK RAIL REINF. 0.048" GALV. STL.	STEEL
17	BOTTOM LIFT RAIL & SASH REINF. 0.060" GALV. STL.	STEEL
18	WINDOW SCREEN	
19	2x WOOD BUCK	WOOD
20	1/4" SHIM MATERIAL	WOOD
21	WEATHERSTRIP PILE W/FIN .187 x .270, LOCK RAIL & SASH (ULTRAFAB)	
22	WEATHERSTRIP PILE W/FIN .187 x .230, FIXED MEETING RAIL (ULTRAFAB)	
23	WEATHERSTRIP PILE W/FIN .187 x .150, SILL (ULTRAFAB)	
24	WEATHERSTRIP VINYL BULB .187" x .375" ø (AMESBURY)	
25	GLAZING 5/8" INSULATED ANNEALED GLASS	GLASS
26	GLAZING COMPOUND (DOW #1199)	SILICONE
27	#8 x 2" PHILLIPS PANHEAD SHEET METAL SCREW (NAILING FLANGE)	STEEL
28	#8 x 1 1/2" PHILLIIPS PANHEAD SHEET METAL SCREW (JAMB ANCHORING)	STEEL
29	15 lbs. FELT (WATER BARRIER)	FELT
30	EXTRUDED ALUM. BEAM MULLION SILVERLINE #2723 6063-T6	ALUM.
31	BEAM MULLION MOUNTING BRACKET SILVERLINE #2722 6063-T6 ALUM. .125"	ALUM.
32	#8 x 3/4" PANHEAD SELF TAPPING SCREW	STEEL
33	#10 x 1 1/2" PHILLIPS FLAT HEAD SHEET METAL SCREW	STEEL

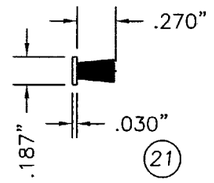

WEATHERSTRIP PILE W/FIN
LOCK RAIL & SASH, BY ULTRAFAB

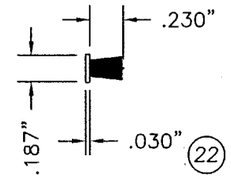

WEATHERSTRIP PILE W/FIN
FIXED MEETING RAIL, BY ULTRAFAB

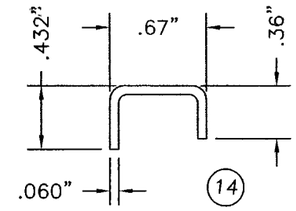

FIXED MEETING RAIL REINF. TOP
GALVANIZED STEEL

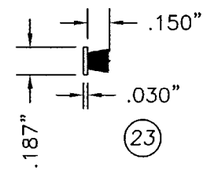

WEATHERSTRIP PILE W/FIN
SILL, BY ULTRAFAB

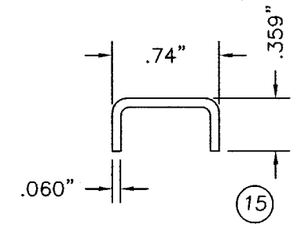

FIXED MEETING RAIL REINF. BOTTOM
GALVANIZED STEEL

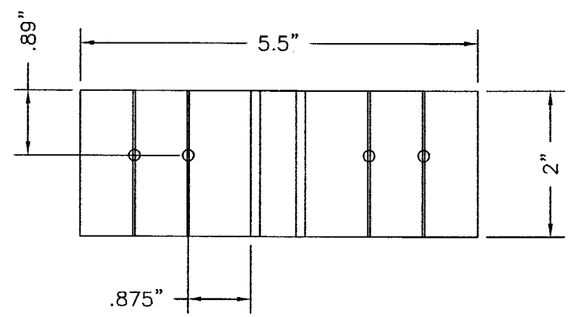

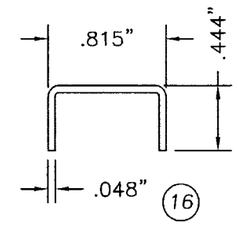

LOCK RAIL REINF.
GALVANIZED STEEL

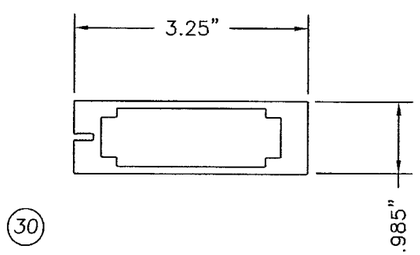

EXTRUDED ALUM. BEAM MULLION
SILVERLINE #2723 6063-T6 ALUM.

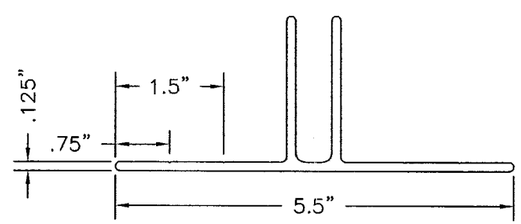

BEAM MULLION MOUNTING BRACKET
SILVERLINE #2722 6063-T6 ALUM. 31

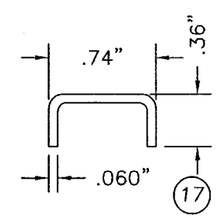

BOTTOM LIFT RAIL & SASH REINF.
GALVANIZED STEEL

PRODUCT REVISED
as complying with the Florida
Building Code
Acceptance No. 04-1025.04
Expiration Date SEPT. 18, 2008
By
Miami Dade Product Control
Division

Product Approval Documents Prepared By:
RW BUILDING CONSULTANTS, INC.
P.O. Box 230 Valrico FL. 33595
Phone No.: 813.659.9197
Florida Board of Professional Engineers
Certificate Of Authorization No. 9813
Lyndon F. Schmidt, P.E. No. 43409

PRODUCT: EXTRUDED PVC SINGLE HUNG WINDOW UP TO 55 1/2" x 65 1/2"

PART OR ASSEMBLY: BILL OF MATERIALS & UNIT COMPONENTS

REVISIONS

NO.	DATE		BY
4	12/10/04	CHANGE ENGINEER	EW
3	10/18/04	REVISE O.A. SIZE NOTES	EW
2	12/01/03	ADD MULLED UNITS	RW
1	8/06/03	REVISE ANCHORING	RW

DATE: 6/15/03
SCALE: N.T.S.
DWG. BY: TJH
CHK. BY: RW
DRAWING NO.: S-2375
SHEET 6 OF 6

R:\ACTIVE PROJECTS\PF633\S2375 REV 4\S-2375-6-RL.DWG